International Journal of Recent Technology and Engineering (IJRTE)
ISSN: 2277-3878 (Online), Volume-9 Issue-2, July 2020

Precision Farming and Smart Irrigation using IoT

Ponlakshmi P, Vidhya Saraswathi P

Abstract*: *Agriculture is the spine of Indian Economy. It mainly depends on Irrigation. The Internet Of Things is used to farmers are easier to monitor and control water possessions. This paper proposed, IoT architecture customized for smart irrigation application. Arduino board is used to communicate a variety of sensors like ultrasonic, soil moistur and light sensors. This work managed to decrease the expenditure, diminish devastate water and diminish substantial individual edge. Relay is developed to organize the switching of solenoid. Also, the scheme preserved to measure the soil moisture. It controls the solenoid valve according to human. Graphical User Interface (GUI) connected withAndroid application to motivate watering movement. SMS alert moreover sent to the home user in critical situations.

Keywords*: *IoT, Soil moisture sensor, ultrasonic sensor, light sensor, Arduino board

I. INTRODUCTION

In indian economy, agriculture plays a significant task for expansion of nation. Cultivation based on the monsoons. It has inadequate cause of wet. Recently, the world is stirring towards the elegant humanity concepts like smart cities, homes and phones. Therefore, the smart irrigation is used in agriculture field. Appropriate maintenance for the yield becomes injured. That causes a enormous defeat for a planter. Also the elegant irrigation proposal was produced [1] To plant in inrrigation system, the water is provided to plant. It depends on the type of the soil. Two things are very important in agriculture field. First, to obtain the fecundity of soil. Then, calculate the humidity substance in soil. Recently, special techniques are available for irrigation. These are diminish the necessitate of drizzle. This method is determined through electrical control and on or off display.

II. EXISTING SYSTEM

Tensiometer computes the difficulty in the soil caused through suction forces. Conventionally, this force convert by a manometer. Electronic sensors are computerize quantity. The weight is connected to wet substance through a soil preservation arch. It changes among soil nature and typically exhibits hysteresis. That is unusual curves describe the wetting-up and drying-out of muds.

Manuscript received on May 25, 2020.
Revised Manuscript received on June 29, 2020.
Manuscript published on July 30, 2020.
* Correspondence Author
Ponlakshmi P, Student, Department of Computer Science and Information Technology, Kalasalingam Academy of Research and Education, Krishnankoil, irudhnagar District, India.
Vidhya Saraswathi P, Assistant Professor, Department of Computer Science and Information Technology, Kalasalingam Academy of Research and Education, Krishnankoil, Virudhnagar District, India.

All are inexpensive elements used for notifying the planters for irrigation. Water in the soil lowers its electrical resistivity, Gypsum, or electrical resistance blocks work on the attitude. The material from the block is connected by the humidity rule within adjacent mud. Therefore, the water substance and hole stress is the similar block as in the soil. Without the need for an operator, the blocks limit the resistivity to be computed.

The process needs calibration for the exacting mud. It will focus the hysteresis. A pair of processing methods used in soil moisture are time domain reflectometry (TDR) and time domain transmissometry (TDT). These are calculated by means of electromagnetic pulses. It is exact, quick, non-destructive, capable of automated operation. This is used exclusive of site-specific calibration. Neutron scattering is one more proecss used to measure the changes. A basis of neutrons is lowered to an contact pipe of soil. Neutrons crash through hydrogen nuclei. Then there are rehabilitated to deliberate thermalized neutrons. It reflects through a offset. The resource and offset are usually placed in a particular search. It preserve unusual pits to observe the changes. Water substance is derivative from the reckon percentage. The content compared with the number of counts and background reading from a allusion standard. Neutron scattering technique is used a smaller amount compared with extra methods while issues associated with operating radiation-emitting devices.

III. PROPOSED SYSTEM

Today's internet plays on important role in all domains. IoT for Irrigation is playing a important role for crops are getting the right amount of water at right amount of time. This proposed work reduces the charge, diminish dissipate water and condense the substantial individual boundary. Numerous sensors used for analyzing different parameters in irrigation field. That is used on the wireless sensor equipment. The following are the technologies of IOT to gather the information.

- Arduino
- ESP8266
- Soil Moisture Sensor
- Solenoid Valve
- Submersible Motor Pump
- Relay Switch
- Transistor (BC-547)
- Diode (IN4007)
- Relay Circuit

A variety of sensors are deployed in the meadow similar to soil moisture, ultrasonic and light sensor in the field section. These are connected to microcontroller via ESP8266.

Internet service providers such as mobile hotspot, Wi-Fi router are connected with internet via Wi-Fi. Initially, It checks the status of water level indicator. Then, the process continue with the condition of water is present, or else it ends. It checks the position of soil moisture sensor. The status determine the constituency is wet, after that motor resolved.

- If Region 1 is dry, valve 1 will open and motor will be onfor 10 seconds. If Region 1 is humid, valve 1 will open and motor will be on for 5 seconds. During this, valve 2 will remain closed.
- Once again module checks status of water level indicator, if water is present then it proceeds otherwise it terminates.
- If water is present, then it checks status of soil moisture sensor 2,
- If Region 2 is wet, motor will be off.
- If Region 2 is dry, valve 2 will open and motor will be on for 10 seconds.
- If Region 2 is humid, valve 2 will open and motor will be on for 5 seconds.
- During this, valve 1 will remain closed.

Fig 1. shows the block diagram of IOT based soil moisture measurement

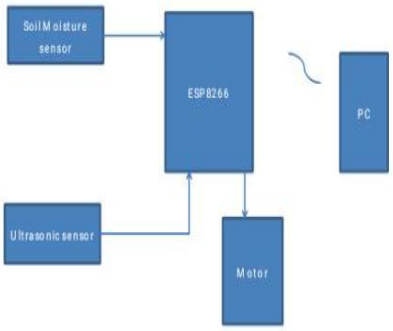

Fig.1 IOT based Soil moisture measurement

IV. SYSTEM DESCRPTION

A. Arduino Uno:

It is an open-source microcontroller board. It prepared by sets of digital and analog input/output pins. It can be interfaced to different development boards with circuits. To control and sense or compute the moisture in the soil, an arduino microcontroller is used. It has six analog pins with fourteen digital pins. Also, that is programmable with the Arduino IDE throughout a type B USB cable and is based on the Microchip AT mega328P microcontroller. Then, developed by using Arduino.cc. An external 9 volt battery recognize the voltages among 7 and 20 volts, besides, it is like Arduino Nano and Leonardo.

The Fig 2. illustrates the Arduino UNO board

Fig 2. Arduino Uno

B. ESP8266

Microcontrollers attach with a network called Wi-Fi and create simple TCP/IP connections also. It does not accept the English language records on the chip and the commands. There were very few external components on the module that are low price. It is very cheap in volume, attracted numerous hackers to notice the module, and the software. Also, interpret the Chinese documentation. The following Fig 3. Shows ESP8266 chip

Fig 3.ESP8266

C. Soil Moisture Sensor

It determines the volumetric water content in soil. Gravimetric quantity of the soil moisture desires remove, dry and weight of model soil moisture.

Fig.4.Soil Moisture Sensor

D. Solenoid Valve

It is restricted by an stimulating current via solenoid. This is an electro instinctively valve. The surge is switched on or off. Three-port valve have the switched among outlet ports. Several valves located reciprocally. In fluidics, the valves are the often used manage essentials. The process is the following: Shut off , release, dose, distribute or mix fluids. Many application areas used this process. Solenoids suggest quick and secure switching, elevated consistency, time-consuming service, high-quality compatibility of the equipment used. Low control power and solid plan.

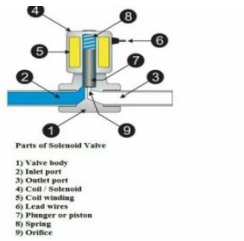

Fig.5 Solenoid Valve

E. Relay Switch

Relays is isolate two circuits electrically and bond them magnetically. It is an electromagnetic device. The devices are very useful and allow one circuit to switch another one whereas they are entirely detached. They are used to interface an electronic circuit working at a low voltage to an electrical circuit which works at very high voltage.

To switch a 230V AC circuit, a relay can build a 5V DC battery circuit. Thus a small sensor circuit can be capable of drive an electric bulb or a fan.

Fig 6.Relay Switch

F .Transistor (BC-547)

To amplify or switch electronic signals and electrical power, a semiconductor device is used known as a transistor. It is composed of semiconductor material. usually with at least three terminals for connection to an external circuit.

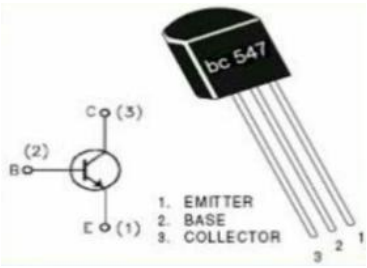

Fig.7. Transistor

G. IN4007 – Diode

Two-terminal electronic component in electronics is known as a diode. Mainly it conducts in one direction that is known as asymmetric conductance. Its value is preferably zero resistance to the flow of current. It is high, that is ideally infinite in the other direction. Piece of crystalline semiconductor material is linked to a pair of terminals is called as semiconductor diode.

Fig. 8 Diode

V. EXPERIMENTAL RESULTS

Initially, Setup the Arduino IDE Software and Flash the ESP8266-12 **a**nd following list of components are used.

Table 1. List of Components

Components	Quantity
Explore ESP8266 Wi-Fi Module	1
Relay Switch	3
Transistor (BC-547)	3
Diode (IN4007)	3
LED (Power Indication)	1
Power Supply - 5v 3.3v 9v 18v Ground	1 (from Arduino) 1 (from Arduino) 1 (from 9v battery) 2 (from 9+9v battery) From Arduino

The following steps are followed to set up the connections

1. Connection put together in bread-board resembling figure 8. Then the results verified.

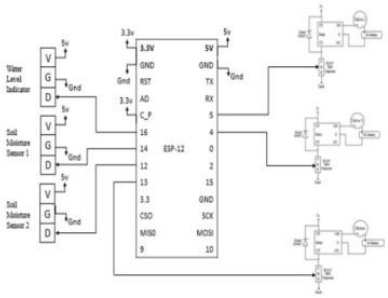

Figure 8. Connection Circuit

2. Create a PCB layout using software **Express PCB** after confirmed the results.

That is expressed in the figure 5.2

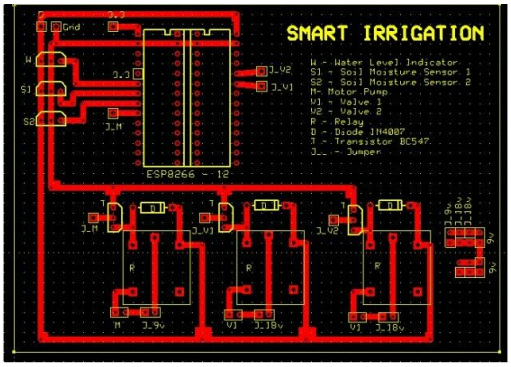

Fig.9 PCB Board

3. PCB design written on a protected copper.
4. Until all copper oxidizes excluding PCB traces, the PCB copper plate in a copper sulphate solution combined. After that, wash with petrol to eradicate the printed carbon. This is called as itching.
5. The components placed carefully. Then solder them.
6. The following figure 5.3 displays the front and rear views

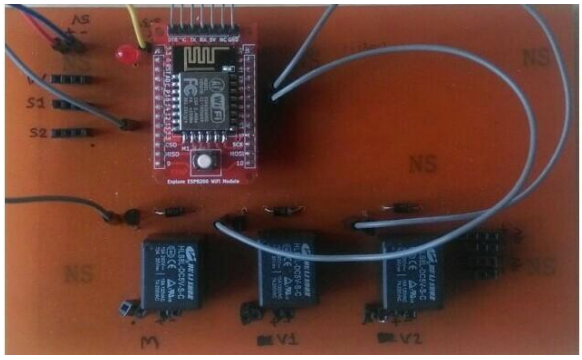

Fig .10 PCB Board front view Figure 5.3

7. Entire connections made completely. That is connected the stream intensity meter, top soil humidity sensors, speed motor pump as well as solenoid.
8. The control equipment connected with production of communication that is declared in connection circuit diagram. For motor pump 9v and 18v to both valves needed. The control equipment connected to 5v PCB board and 3.3v soil from Arduino board. The figure 5.4 illustrates the physical connection and implementation of the device.

Fig.11 Experimental Setup

The survey report is generated by 01.03.19 to 26.03.19.Soil moisture sensor and ultrasonic sensor data's are collected. Survey for water level and soil moisture levels are generated.

SURVEY 1: (for Water level)

WATER MEASUREMENT	WATER LEVEL
6cm	low level
77cm	Normal level
98cm	Normal level
127cm	Normal level
40cm	Low level
47cm	Low level
53cm	Normal level

SURVEY 2: (for soil moisture level)

SOIL MOISTURE VALUE	SOIL MOISTURE SENSOR LEVEL
70%	Wet Normal level
29.5%	Semi-Wet low level
90%	Wet Normal level
125%	Wet Normal level
179%	Wet Normal level
57%	Semi-Wet Normal level
219%	Wet Normal level
35.9%	Semi-Wet low level
400%	Wet Normal level
55.62%	Semi-Wet low level

VI. CONCLUSION

In this work, IoT system is designed to farmers are easier to monitor and control water resources. .MQTT server are used for aware purpose. It sends the warning message to user mobile phones for normal or critical operations in home. The result is implemented by Arduino IDE software. This research work helps the farmers are easy to monitor and control water resources and avoid the improper maintainance of crops.

REFERNECES

1. S. Rajeswari,K. Suthendran,K. Rajakumar,A Smart Agricultural Model by Integrating IoT, Mobile andCloud-based Big Data Analytics,International Journal of Pure and Applied Mathematics, 2018.
2. Dr.N.Suma, Sandra Rhea Samson, S.Saranya, G.Shanmugapriya, R.Subhashri,IOT Based Smart Agriculture Monitoring System,International Journal on Recent and Innovation Trends in Computing and Communication ,2017.
3. Karan Kanasura, Vishal Zaveri,SENSOR BASED AUTOMATED IRRIGATION SYSTEM WITH IOT: A TECHNICAL REVIEW ,Babu Madhav Institute of Technology, Uka Tasadia University, Bardoli, Gujarat, India.
4. Yashika Mahajan, Mrunalini Pachpande, Ruchita Sonje, Swati Yelapure, Manisha Navale,AUTOMATION BY IOT & MACHINE LEARNING IN IRRIGATION,IJARIIE,2018.
5. Prakhar Srivastava, Mohit Bajaj, Ankur Singh Rana,Overview of ESP8266 Wi-Fi module based Smart Irrigation System using IOT,International Conference on Advances in Electrical, Electronics, Information, Communication and Bio-Informatics2018.