International Journal of Recent Technology and Engineering (IJRTE)
ISSN: 2277-3878 (Online), Volume-9 Issue-1, May 2020

Electro-Hydraulic Position Tracking using NARMA Neural Controller

Ndilkoula Diontar, Christopher A. Otieno, Stanley I. Kamau

Abstract: ***This paper presents an electro-hydraulic position tracking which is one of the most used applications in industries such as automobile, aeronautic, robotic, computer numeric control etc. It is used widely in industrial application due to its higher force and torque generation, smooth response characteristic and good positioning capabilities. In order to design a controller to track the position of the system, a mathematical model of the system was first developed. From this model a nonlinear state space of the system was found and simulated in open loop in MATLAB/SIMULINK. After developing the mathematical model, Nonlinear Auto Regression Moving Average (NARMA) Neural Controller based which is able to cancel out the nonlinearity of the electro hydraulic by transforming the nonlinear system dynamic into linear system dynamic was designed to control the electro hydraulic plant. In the neural controller design process, first a neural network was trained offline and then the trained neural network was reconfigured as a controller to track the reference. After the controller eliminates the nonlinearity and dynamic of the system, the input output relation become a simple implicit relation and the output of the plant was able to track the reference. In order to evaluate the performances of the designed controller, a Proportional Integral (PI) controller was tuned and its response was compared with the one of NARMA neural controller. Results showed that NARMA neural controller based presents a better overshoot and settling compare to proportional integral controller.***

Keywords: ***Electro-hydraulic, Neural Network, NARMA, Proportional Integral controller***

I. INTRODUCTION

Hydraulic actuators are one of the most important equipment in modern engineering applications. Due to their capacity to generate high force and torque for carrying heavy loads, they have been used in wide domain such as automobile industry, aeronautic, robotic, manufacturing process, machine tool, road construction and many other applications [3],[2]. They also present many benefit such as smooth response characteristics, good positioning capability, small size to power ratios, smother performance at low speeds and wide speed range [9], [10]. However, hydraulic systems are highly nonlinear and this makes them challenging to control.

Manuscript received on April 02, 2020.
Revised Manuscript received on April 20, 2020.
Manuscript published on May 30, 2020.
* Correspondence Author
Ndilkoula Diontar, Pan Africa University Institute for Basic Science Technology and Innovation. Mechatronics Engineering department
Christopher Otieno Adika Multi Media University, Engineering department
Stanley. I. Kamau, Jomo Kenyatta University of Agriculture and Technology. Electrical Engineering department.

Apart from nonlinearity, they present many uncertainties, disturbances and this fact makes it difficult for precise control [11]. Due to this difficulty, hydraulic actuator has been combined with electrical technology to make electro-hydraulic systems in order to improve its control and to achieve best performance [8]. Many control theories based on linear control strategies in most case have been applied by researchers to control electro-hydraulic system. Although linear controllers can control system, they cannot achieve good performance for a highly nonlinear system such as electro hydraulic system with time varying dynamic. The application of nonlinear control strategy to electro-hydraulic has found an interest in the performance improvement. In recent decades, intelligent control theories such as Fuzzy Logic Controller (FLC), neural network controller etc. for nonlinear system have been used in control system to improve the performance of nonlinear system such as electro-hydraulic system. Ziegler-Nichols tuning method was used to tune the Proportional Integral and Derivative (PID) parameters after the nonlinear model of electro-hydraulic was linearized [1]. First a collection of input and output data was done and used to for model estimation by using Auto Regressive with Exogenous input (ARX) as the model structure of the model. After designing the controller and simulation through SIMULINK, it was applied in real time for verification. Nelder-Mead tuning method was used to tune the PID parameters. The PID controller looks feasible to control the electro- hydraulic as per the desired reference signal but the speed of the response can be improved further for better tracking control using the proposed controller [2]. A PID controller was applied in electro hydraulic servo valve to control the linear actuator position. In this study, Genetic Algorithm (GA) was used to find the best parameter of PID that give a better tracking performance [3]. A neural based position controller for electro-hydraulic servo system was proposed in [4]. In their study, they used a feedforward neural network constituted of an input and output layer with one linear neural, the related controlling was done by a hidden layer with two nonlinear neurons. Model Reference Neural Control (MRNC) scheme with learning Backpropagation (BP) algorithm were used. Neural Network control based on Feedback Linearization control (NNFBL) for a servo-hydraulic vehicle suspension system was presented [5]. Their study was aimed to improve the tracking performance of the system in the presence of deterministic road disturbance. A flexible artificial neural network was applied in to control the servo hydraulic motor velocity [6]. The network used is based on feedforward neural network with three layer and a flexible bipolar sigmoid function was used as activation function in the hidden layer and linear function in output layer.

In this study, back propagation was used to train ANN to learn the inverse of the plant and then connect it in series with the plant as controller.
Investigated the tracking performance of position control of electro-hydraulic actuators based on Fuzzy Logic Control (FLC) in which parameters are optimized by particle swarm optimization [7]. PID controller design for electro-hydraulic servo actuator system was proposed in to control its stability. In this study, a neural network based Nonlinear Auto regressive Moving Average (NARMA) neural network controller is proposed to track an electro hydraulic linear actuator position.
The rest of the paper is organized as follows: in section 2, the mathematical modelling of the system is presented, section 3 presents general theory of neural network controller design, in section 4, describes the proposed controller. The simulation and result are presented in section 5. Followed by the discussion in section 6.

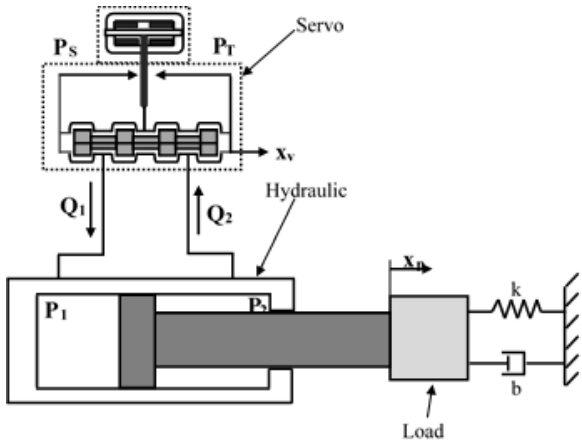

Fig. 1. Schematic diagram of electro hydraulic

II. MATHEMATICAL MODELING

The system considered in this paper consists of servo valve, hydraulic cylinder and mass-spring-damper attached to the cylinder piston, as shown in Figure 1 and the model used is as the one in [12]. The hydraulic cylinder considered consists of a single rod and a single ended piston with a double acting cylinder. From the figure, Ps denotes the hydraulic supply pressure, PT denotes the tank pressure, P1 and P2 denote the fluid pressure in the upper and lower chamber of cylinder and xv denotes the spool valve displacement. Hydraulic actuator dynamic which include load and servo valve dynamics manage to describe characteristic and behavior of the hydraulic actuator system.

A. Equation of piston motion

The piston position x_p and velocity v_p are obtained from the equation of motion of the piston:

$$\dot{x}_P = v_P \quad (1)$$

$$m\dot{v}_p = A_1P_1 - A_2P_2 - b\dot{x}_p - kx_p - mg \quad (2)$$

where x_p is the actuator position, v_P actuator velocity, F_a denotes the hydraulic actuating force, b load viscous damping, k is the spring constant. The hydraulic force F_a is given by

$$F_a = A(P_1 - P_2) \quad (3)$$

$$P_L = P_1 - P_2 \quad (4)$$

Where A is the cylinder's chamber area, P_L is the load pressure.

$$\dot{v}_p = \frac{1}{m}\left[AP_L - b\dot{x}_p - kx_p - mg\right] \quad (5)$$

B. Pressure dynamic equation in the cylinder chamber

The actuator model consists of mass balances for each actuator chamber, and an equation of motion for the piston. The derivative of the load pressure P_L is the pressure across the actuator piston is given by the total load flow through the actuator divided by the fluid capacitance i.e.

$$\frac{V_1}{4\beta_e}\dot{P}_L = Q_L - Q_s - A\dot{x}_p \quad (6)$$

$$Q_L = C_d w x_v \sqrt{\frac{(P_s - sgn(x_S)P_L)}{\rho}} \quad (7)$$

$$Q_s = C_{tm}P_L \quad (8)$$

$$\dot{P}_L = \frac{4\beta_e}{V_1}\left[C_d w x_S \sqrt{\frac{(P_S - sgn(x_S)P_L)}{\rho}} - C_{tm}P_L - A_1\dot{x}_p\right] \quad (9)$$

Where C_d is discharge coefficient, w is the spool valve area gradient, Ps is the supply pressure, P_L is return pressure and ρ is the oil density, Q_L denote the load flow rate Q_s denotes leakages flow rate, β_e is bulk modulus, V_t is the total volume of the cylinder.

C. Servo valve equation

The relationship between spool displacement, x_v and valve input voltage, u can be described as first-order model.

$$\dot{x}_v = \frac{k_v}{\tau}u - \frac{1}{\tau}x_v \quad (10)$$

Where, k_v and τ represent the valve gain and the time constant respectively.

D. State space

From equation (1) to (10) we get the follow state space mode:

$x_p = x_1$, $\dot{x}_p = \dot{x}_1 = v_p$, $v_p = x_2$, $\dot{v}_p = \dot{x}_2$, $P_L = x_3$, $\dot{P}_L = \dot{x}_3$, $x_v = x_4$, $\dot{x}_v = \dot{x}_4$

Where:

x_1 is the cylinder position
x_2 is the cylinder velocity
x_3 is load pressure
x_4 is spool valve displacement

$$\dot{x}_1 = x_2$$
$$\dot{x}_2 = -\frac{k}{m}x_1 - \frac{b}{m}x_2 - \frac{A}{m}x_3 - g$$
$$\dot{x}_3 = -\frac{4A\beta_e}{V_t}x_2 - \frac{4C_{tm}\beta_e}{V_t}x_3 + \frac{4C_d w\beta_e}{V_t\sqrt{\rho}}\sqrt{(P_s - x_3 sgn(x_4))}$$
$$\dot{x}_4 = \frac{k_v}{\tau}u - \frac{1}{\tau}x_4$$

Substituting above parameters we get the new state space mode is as follow

$$\dot{x}_1 = x_2$$
$$\dot{x}_2 = -a_1x_1 - a_2x_2 - a_3x_3 - g$$
$$\dot{x}_3 = -a_4x_2 - a_5x_3 + a_6\sqrt{(P_s - x_3 sgn(x_4))}$$
$$\dot{x}_4 = a_7u - \frac{1}{\tau}x_4$$

Where $a_1 = \frac{k}{m}$; $a_2 = \frac{b}{m}$; $a_3 = \frac{A}{m}$;$a_4 = \frac{4A\beta_e}{V_t}$; $a_5 = \frac{4C_{tm}\beta_e}{V_t}$; $a_6 = \frac{4C_d w\beta_e}{V_t\sqrt{\rho}}$; $a_7 = \frac{k_v}{\tau}$

The above mathematical model of the system is simulated using MATLAB/SIMULINK block in order to study the system behavior. The simulation model is shown in figures 2. Using the parameters form and the input voltage from -15 to 15 as sinusoidal signal form, we get the open loop response for different subsystem in our study [12]. The response of the simulation is compared with the model in to verify the accuracy of the system and the model is found to be accurate since it has the same response that the one used for validation.

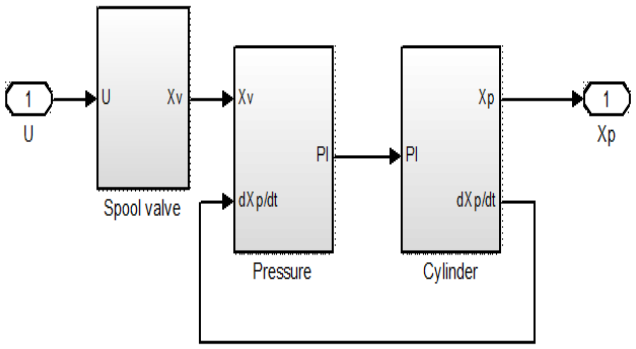

Fig. 2. SIMULINK block of electro hydraulic system

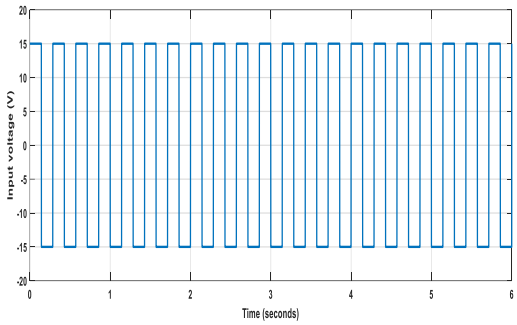

Fig. 3. Input voltage of the open loop of the plant

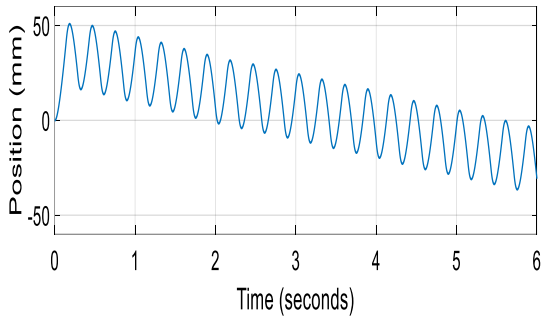

Fig. 4. Open loop response of electro hydraulic position

III. NEURAL NETWORK CONTROLLER DESIGN

Artificial Neural Network (ANN) is an approximated mathematical function based on the human brain that is capable to recognize a relationship in a set of data [13]. It is a process that mimics the manner that human brain operates. It can process information through its nonlinear elements called neuron or node those neuron are connected to each other by the weights. Those weight allow the information transmission from one neuron to another.

Neural network has been applied in the recent decades in control system for nonlinear because of its ability to map the input and the output and allow to track a desire reference [13]. There are many type of neural network configuration used in control system: Supervise neural controller, direct inverse neural controller, Model Reference Neural Control (MRNC), Nonlinear Auto Regression Moving average (NARMA) neural controller and unsupervised neural controller [14]. The first uses a set of a vector of input and target from an existing controller to train the neural network controller to imitate the existing controller [14]. In this structure, the neural controller works in the same way that the other controller but it can adjust disturbances that occur in the system to keep the output closer to the reference. In direct inverse neural controller, the network is trained offline to learn the inverse dynamic of the plant to control and then connect it in series with the model. In this configuration, the nonlinearities in the system are cancelled out if the inverse model of the system is accurate. In MRNC the reference to track is designed as a model and two neural network are used [13], [14]. One is used as the identifier of the plant and another one as the controller. NARMA-L2 is neural controller which represents input-output of nonlinear dynamic system [13], [14], [15]. In the supervised configuration, the network has a target which allow to compare the output of the neural network. In the last configuration, the network does not require a target. In unsupervised control, the NN learn the system using trial method of different state and determines which one has a good performance. In this study NARMA-L2 neural controller is used to track the electro hydraulic position.

IV. NARMA-L2 CONTROLLER

The Nonlinear Auto Regression Moving average controller is a standard neural network controller in which the nonlinear system dynamic is transformed into linear dynamic by cancelling the nonlinearity [16]. In this neural controller, two steps are used in the controller designing to map input-output relation [15]. First a neural network is trained to represent the forward dynamic of the plant to control and next this neural is configured to control the plant.

In the first step, the NARMA model represents a discrete time of the nonlinear dynamic of the system to identify. The equation used to represent this is as follow

$$y(k-d) = f[y(k), y(k-1), \dots, y(k-n+1), u(k), u, \dots u(k-m+1)] \quad (11)$$

where $u(k)$ represent the system input, $y(k)$ the system output,

f the nonlinear function to be approximated by the trained neural network identifier, d is the system delay time. In our case, since the designed controller has to follow the reference, $y(k+d) = yr(k+d)$. Next, a nonlinear controller is developed in the following form:

$$u(k) = g[y(k), y(k-1), \dots, y(k-n+1), u(k-1), \dots, u(k-m+1)] \quad (12)$$

Training a neural network to minimize the mean square error using this above controller is quite slow since this requires dynamic gradient method. In order to overcome the difficulties of computation, Narendra and Mukhopadhyay introduced an efficient method which involve two sub-approximation function and this method is adequate and efficient the identification and control design as well [17].

The following equation represents that method.

$$\hat{y}(k-d) = f[y(k), y(k-1), \dots y(k-n+1), u(k-1), \dots u(k-m+1)] + g[y(k), y(k-1), \dots y(k-n+1), u(k-1), \dots u(k-m+1)].u(k) \quad (13)$$

From the equation above, we derive the equation of the control input that causes the system output to track the reference as follow:

$$u(k) = \frac{y_r(k+d) - f[y(k),\dots,y(k-n+1),u(k-1),\dots,u(k-n+1)]}{g[y(k),y(k-1),\dots,y(k-n+1),u(k-1),\dots,u(k-n+1)]} \quad (14)$$

Instead of using the above equation which requires to determine the control input based on the output at the same time, we use the following model to avoid realization problem.

$$y_r(k-d) = f[y(k), y(k-1), \dots, y(k-n+1), u(k), u(k-1), \dots, u(k-m+1)] + g[y(k), \dots, y(k-n+1), u(k), \dots u(k-m+1)] \quad (15)$$

From this equation, the controller can be obtained as follow

$$u(k+1) = \frac{y_r(k+d) - f[y(k),\dots,y(k-n+1),u(k),\dots,u(k-n+1)]}{g[y(k),\dots,y(k-n+1),u(k),\dots,u(k-n+1)]} \quad (16)$$

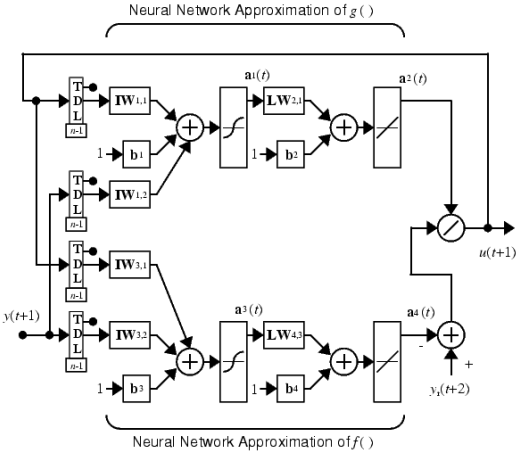

Fig. 5. NARMA-L2 plant structure [17]

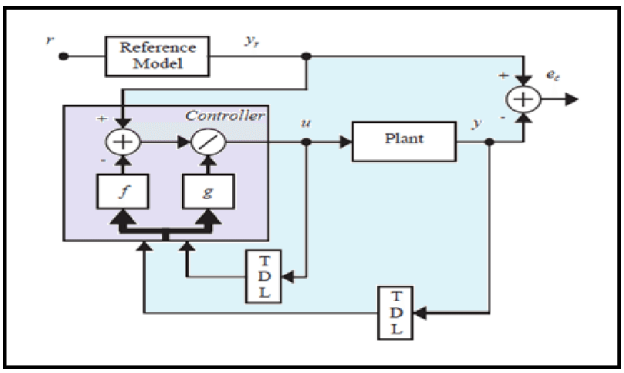

Fig. 6. NARMA-L2 Controller structure [17]

V. CONTROLLER DESIGN

In this study case, output of the system is the electro hydraulic position x_p and the input of the system is voltage u. The controller model of the electro hydraulic is:

$$u(k+1) = \frac{x_r(k+d) - f[x_p(k),\dots,x_p(k-n+1),u(k),\dots,u(k-n+1)]}{g[x_p(k),\dots,x_p(k-n+1),u(k),\dots,u(k-n+1)]} \quad (17)$$

Where x_r is the reference signal.

The controller described was implemented in MATLAB/SIMULINK block using neural toolbox. The table below shows the parameter of the implementation.

Table I NARMA-L2 neural controller parameter

Neural network parameters	
Size of the hidden layer	6
Sampling interval	0.01
Delay input	2
Delay output	2
Network training data	
Training Sample	10,000
Maximum plant input	0.7
Minimum plant input	0
Maximum plant output	0.5
Minimum plant output	0
Maximum interval value	1
Minimum interval value	0.01
Network training parameters	
Training Epoch	300
Training algorithm	trainml

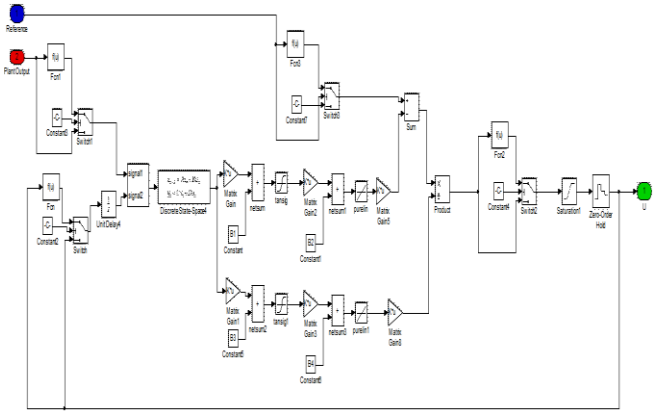

Fig. 7. The designed controller SIMULINK block

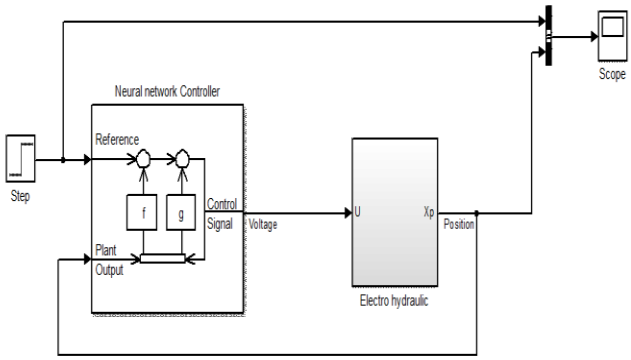

Fig. 8. SIMULINK block of the controller with the plant

VI. SIMULATIONS

Figure 7 shows the training data of neural controller, figure 8 depicts the regression plot of the trained neural network, and figure 9 shows the Mean Square Error (MSE) trained network.

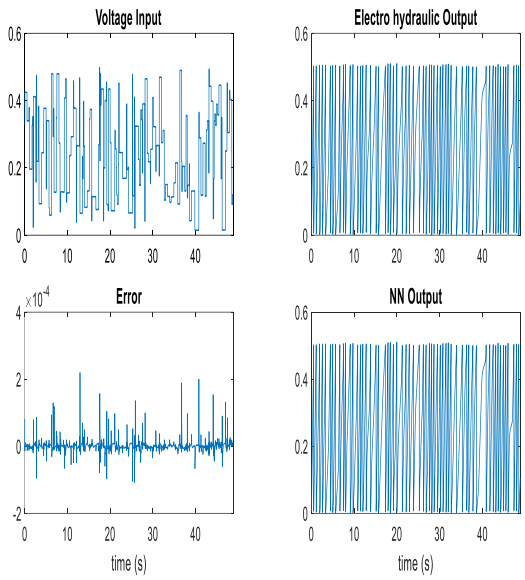

Fig. 9. Training data

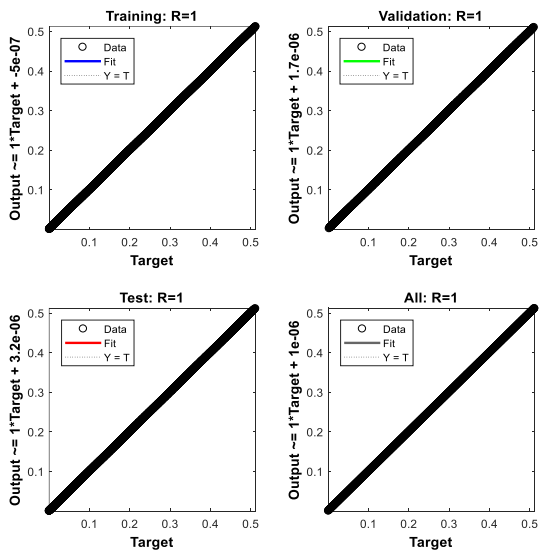

Fig.10. Regression plot

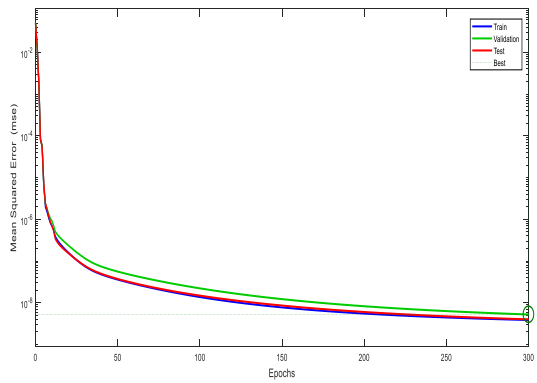

Fig. 11. Neural network Performance

VII. RESULTS AND DISCUSSION

After training the neural controller offline, it was connected to the electro-hydraulic system to track the reference given.

In order to evaluate the performance of the NARMA-L2 neural controller, a Proportional Integral controller was also designed to compare its performance with the neural controller. This choice was made this conventional controller is mostly used in industry to control the electro hydraulic.

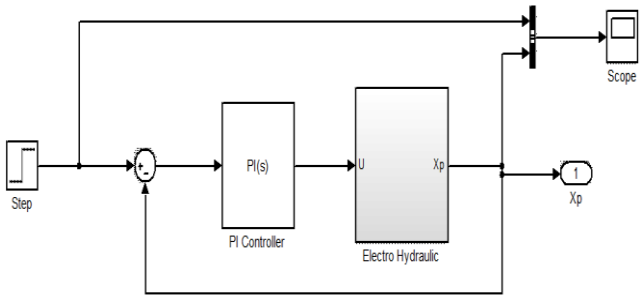

Fig.12. SIMULINK block of PI controller

Performance improvement of electro hydraulic position using NARMA-L2 neural controller is evaluated against the proportional integral PI controller. Step reference signal was applied to electro hydraulic system. The simulation was done using MATLAB/SIMULINK software. Two parameters are considered in the performance comparison of the two controllers. Performance criteria is based on overshoot and settling time of the two controller. Three sets of hidden layer neuron of neural network were used in training process of controller and the performances in term of maximum overshoot and settling time were compared to the proportional integral controller.

The number of hidden layer neuron was increased from 7 initially to 10 and after to 15. Figure 16 show the response of position when using 7 neurons in the hidden layer. From this figure, the maximum of the overshoot is 2.5% and settling time 3.1 second. Then the size of the hidden layer was increased to 10 neuron and the response is as follow: maximum overshoot 0.18% and settling time 2.2 second as it can be seen in figure 17. The number of hidden neuron was increased to 15 and the following response was observed as it is depicted in figure 18: maximum overshoot 2.58% and settling time 3.22 second.

The hidden neuron number plays a crucial impact in the neural network performance. In our case, there is an underfitting when the number of neuron was fixe to 7. The number was gradually increased to 10 and to 15. There is an overfitting when the number was fixe to 15 and the tracking was poor compare to the one with 10. When the hidden neuron number is small the network failed to give a better tracking due to underfitting and when the number of hidden neuron is too large there is overfitting problem and the controller performed poorly. The result was satisfactory with 10 neuron in the hidden layer.

The PI controller response also was evaluated as following: maximum overshoot is 12.8% and settling time 4.62 second.

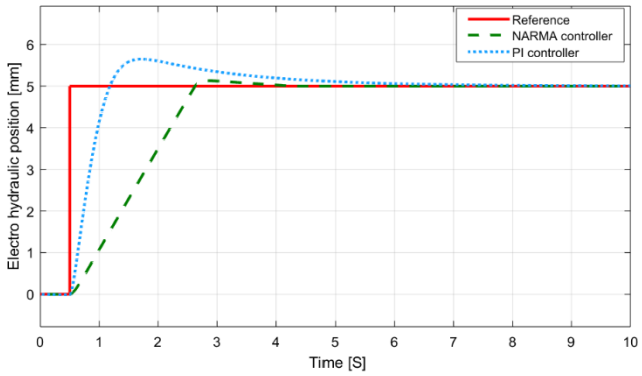

Fig.13. Electro hydraulic position for 7 hidden layer neuron

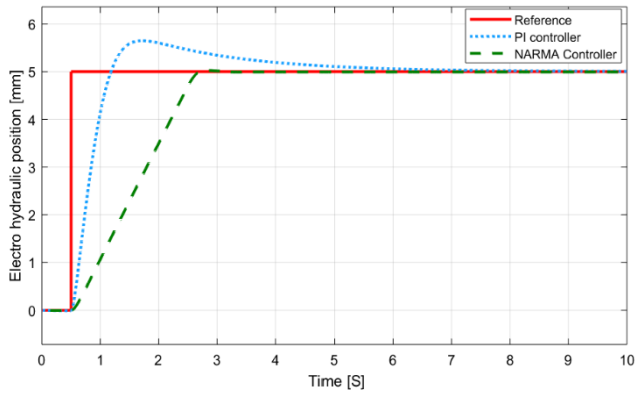

Fig 14 Electro hydraulic position for 10 hidden layer neurons

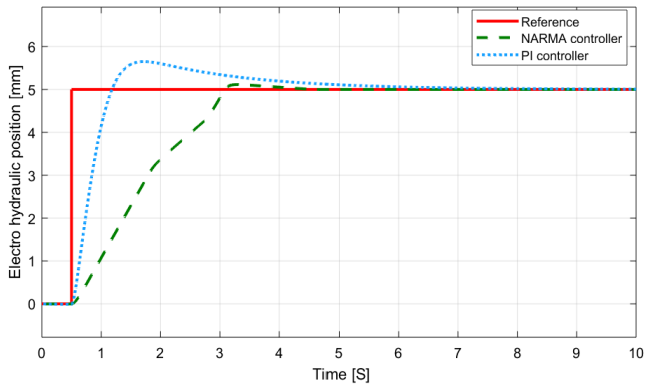

Fig .15. Electro hydraulic position for 15 hidden layer neurons

From the above analysis based on overshoot and settling time, the neural controller with 10 neurons in hidden layer shows a better performance compared to the two other. In the comparison between neural controller and proportional integral controller point of view, the neural controller presents a better result than the conventional proportional integral controller. The poor performance of the PI controller is due the highly nonlinearity of the electro hydraulic system that this controller cannot handle. Contrary, the neural network controller strategy used as the ability to handle the nonlinearity of the electro hydraulic by eliminating the nonlinearity and the dynamic of the system.

VIII. CONCLUSION

In this study, electro-hydraulic position tracking based on NARMA Neural controller has been proposed. First a mathematical model of the studied system was developed and simulated in open loop system. The neural network controller was designed to controller the electro hydraulic plant. The NARMA neural controller strategy was used. To evaluate the performance of the proposed controller, a proportional integral controller was tune and compare with the neural controller. Controller performance criteria was based on the overshoot and settling time. Results showed that neural controller presents a better performance than proportional integral controller.

REFERENCES

1. M. R. N. A. W. R. G. a. Z. S Md Rozali, "PID Controller Design for an Industrial Hydraulic Actuator with Servo System," in Proceedings of 2010 IEEE Student Conference on Research and Development, Putrajaya, Malaysia, 2010.
2. N. I. H. I. M. H. F. R. R. A. Mazidah Tajjudin, "Optimized PID Control using Nelder-Mead Method for Electro-hydraulic Actuator Systems," IEEE Control and System Graduate Research Colloquium, 2011.
3. S. M. Mahdi, "Controlling a Nonlinear Servo Hydraulic System Using PID Controller with a Genetic Algorithm Tool," IJCCCE, vol. 12, 2012.
4. S. E. Đ. U. M. K. SAHĐN YILDIRIM, "A Neural Based Position Controller for an Electrohydraulic Servo System," Recent Researches in Multimedia Systems, Signal Processing, Robotics,Control and Manufacturing Technology.
5. O. A. D. Jimoh Olarewaju Pedro, "Neural Network Based Feedback Linearization Control Of A Servo–Hydraulic Vehicle Suspension System,"Amcs, Vol. 21, 21.
6. F. N. H. S. a. M. S. Majid Karimi, "Application of a flexible structure artificial neural network on a servo-hydraulic rotary actuator," Int J Adv Manuf Technol, 2008.
7. G. K. M. Y. H. Daniel M. Wonohadidjojo, "Position Control of Electro-hydraulic Actuator System Using Fuzzy Logic Controller Optimized by Particle Swarm Optimization," International Journal of Automation and Computing, 2013.
8. C. Y. G. L. M. S. Wenhua JIA, "Modeling and stability of electro-hydraulic servo of hydraulic excavator," in IOP Conference Series: Earth and Environmental Science, 2017.
9. M. F. R. A. R. H. T. G. Ling, "ANFIS Modeling of Electro-Hydraulic," 2014.
10. M. F. R. A. R. H. T. G. Ling, "System Identification and Control of an Electro-Hydraulic Actuator System," 2014.
11. B. L. H.-F. L. H.-S. C. a.-J. Z. Jun Yan, "Nonlinear State Space Modeling and System Identification for Electrohydraulic Control," Hindawi Publishing Corporation Mathematical Problems in Engineering, vol. 2013, p. 9, 2013.
12. H.-C. N. a. Y.-B. K. Hai-Bo Yuan, "System identification and robust position control for electro-hydraulic servo system using hybrid model predictive control," Journal of Vibration and Control, 2017.
13. H. B. D. A. O. D. J. Martin T. Hagan, "An Introduction To The Useof Neural Networks," 2014.
14. T. Callinan, "Artificial Neural Network identification and control of the inverted pendulum," 2003.
15. M. F. J. X. C. R. S. Hamid Asgari, "Design of Conventional and Neural Network Based Controllers for a Single-Shaft Gas Turbine," Aircraft Engineering and Aerospace Technology, 2017.
16. V. S. S. C. a. R. C. Kittisuk Srakaew, "Design Of Narma L2 Neurocontroller For Nonlinear Dynamical System," 2010.
17. Mathwork, "MathWork," athWork, [Online]. Available: https://in.mathworks.com/help/deeplearning/ug/design-narma-l2-neural-controller-in-simulink.html#responsive_offcanvas. [Accessed November 2019].

AUTHORS PROFILE

Ndilkoula Diontar, Pan Africa University Institute for Basic Science Technology and Innovation. Mechatronics Engineering department

Christopher Otieno Adika Multi Media University, Engineering department

Stanley. I. Kamau, Jomo Kenyatta University of Agriculture and Technology. Electrical Engineering department.