International Journal of Recent Technology and Engineering (IJRTE)
ISSN: 2277-3878 (Online), Volume-9 Issue-1, May 2020

Design and Analysis of double-stacked Heat Exchanger for Brewery Application

Aentriksh Khanzode, Tejashree Kadus, Pranjal Patil, Suraj Mali, Sudesh Powar

Abstract: ***A heat exchanger is a device intensively used for enhancing the transfer of heat energy between two or more working fluids at different temperature, which are in thermal contact. The optimal design and efficient operation of heat exchanger and heat transfer network are of a great significance in any of the process industry. The heat transfer efficiency depends on both design of heat exchanger and property of working fluid. From various types of heat exchanger, the double stacked shell and tube heat exchanger with straight tube and single pass is to be under study. Here the redesign of heat exchanger takes place with the key objectives of optimizing the pressure drop, optimizing the heat transfer rate and reducing the saddle support weight used for cooling purpose in brewery application. The design calculations are carried out using the Kerns and Bell Delwar method and other important parameters dealing with material selection and geometries are also taken into consideration. FEA analysis for optimizing the saddle support weight is carried out using Dassault systeme's Solidworks while the CFD analysis for optimizing pressure drop and heat transfer rate is carried out using Dassault systeme's Solidworks analysis software and the design and working of Shell and tube heat exchanger is determined in terms of variables such as pressure ,temperature ,mass flow rate ,flow rate ,energy input output that are of particular interest in Shell and tube heat exchanger analysis.***

Keywords**:** ***CFD, Double stacked Shell and tube heat exchanger, Heat transfer, Pressure drop, Saddle support, FEA,***

I. INTRODUCTION

Heat Exchanger, a piece of brewery equipment is used to quickly raise or lower the temperature of wort or beer. Once the liquid has been made into wort, it needs to be cooled down as fast as possible. Lowering the temperature of wort as quickly as possible is crucial in the brewing process, and the bigger an operation is, the more difficult this process becomes. This can be done in a number of ways, including adding ice to the kettle, putting the kettle in ice, and using either a wort chiller. one of the most vital pieces of equipment for increasing efficiency is a heat exchanger. Use of heat exchangers increase production, reduce energy consumption and emissions, allow for less operational water use and assist in wort recovery.

They are indispensable tools which make beer and cider more efficient. Heat exchangers play a vital role in various application of varying pressure and major temperature difference. In order to transfer heat efficiently heat exchangers with larger area and more tubes are used.

This is an efficient way to use energy and avoid wastage of thermal energy. For efficacious heat transfer, the heat exchanger should be designed considering minimum pressure drop, higher mass flow velocity, larger heat transfer coefficient, and minimum fouling factor. The objective of the present work is to optimize the pressure drop of fluid in shell side of shell and tube heat exchanger, enhance the heat transfer rate and optimize the saddle support weight as the Shell and tube heat exchanger chosen is a double stacked.

II. LITERATURE SURVEY

Heat exchanger enhancement depends on many factors like tubes arrangement, working fluid temperature, pressure, tube count, type of flow, shell tube dimensions, type of pitch, baffle spacing, space cutting, pressure drop.

A. Effects of shell diameter.

As shell diameter increases for the square and triangular pitches, heat transfer coefficient also increases. square pitch usually deals with small range of pressure drop and heat transfer while the triangular pitch deal with the shell diameter at high pressure and high overall heat transfer [1].

B. Effects of baffle spacing and cutting spacing.

Baffles play a vital role in augmenting the heat transfer by directing the directions of fluid stream. It reduces the flow velocity, which cause low pressure drop and overall heat transfer. Suitable increase in cutting space minimizes both heat transfer coefficient and pressure drop. In single baffle the fluid within the exchanger flow in a zig-zag manner which lead to eddy formation and reverse mixing of fluid particles [2].

C. Effect of tube length.

Heat transfer coefficient and pressure drop for tube side are more concern to vary with tube length comparable to shell side. The increase in tube length increase the cross-sectional area, thus resulting in rise of total heat transfer and pressure [3].

Manuscript received on April 02, 2020.
Revised Manuscript received on April 15, 2020.
Manuscript published on May 30, 2020.
* Correspondence Author
Aentriksh Khanzode, Student, MIT Academy of Engineering, Maharashtra, India.
Tejashree Kadus, Student, MIT Academy of Engineering, Maharashtra, India.
Pranjal Patil, Student, MIT Academy of Engineering, Maharashtra, India.
Suraj Mali, Student, MIT Academy of Engineering, Maharashtra, India.
Sudesh Powar, Assistant Professor, MIT Academy of Engineering, Maharashtra, India.

D. Effect of fouling factor.

Fouling is a major problem faced by the industries which reduces the efficiency of equipment's. fouling factor is due to the deposition of layer of dirt chemicals particulates in the inner side of tube or the shell which hinders the flow of fluid, the fouling factor also increase when the temperature of fluids decreases, thus it affects the heat transfer rate and performance of heat exchanger. [4].

The study examines the effect of different parameters on the performance of Shell and tube heat exchanger. it concludes that the heat transfer coefficient and pressure drop plays a vital role in the designing of heat exchanger, thus considering suitable effects of all the concern areas of study help us to design analyze and manufacture the best suited heat exchanger for suitable application.

III. PROPOSED SYSTEM

By taking into consideration the parameters such as the Triangular pitch, Single segmented baffle, Single pass, Counter flow, Double stacked, tube length, thickness and tube patterns, baffle spacing, number of baffles and the thermal design point of view. The heat exchanger for the brewery application is designed and analyzed for optimization of Pressure drop, Heat transfer rate and the Saddle support weight subjected to the desired operating conditions.

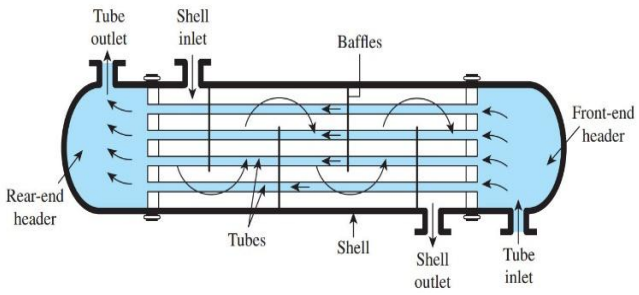

Fig.1 Single pass Heat Exchanger

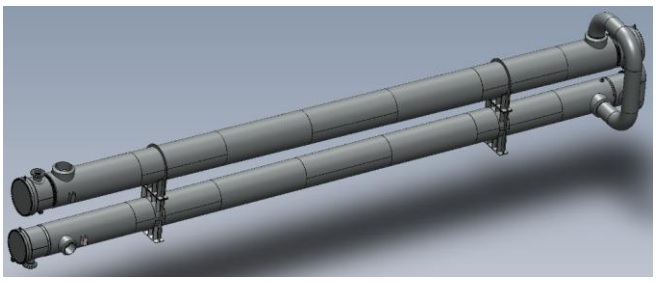

Fig. 2 Double stacked heat exchanger model

IV. METHODOLOGY

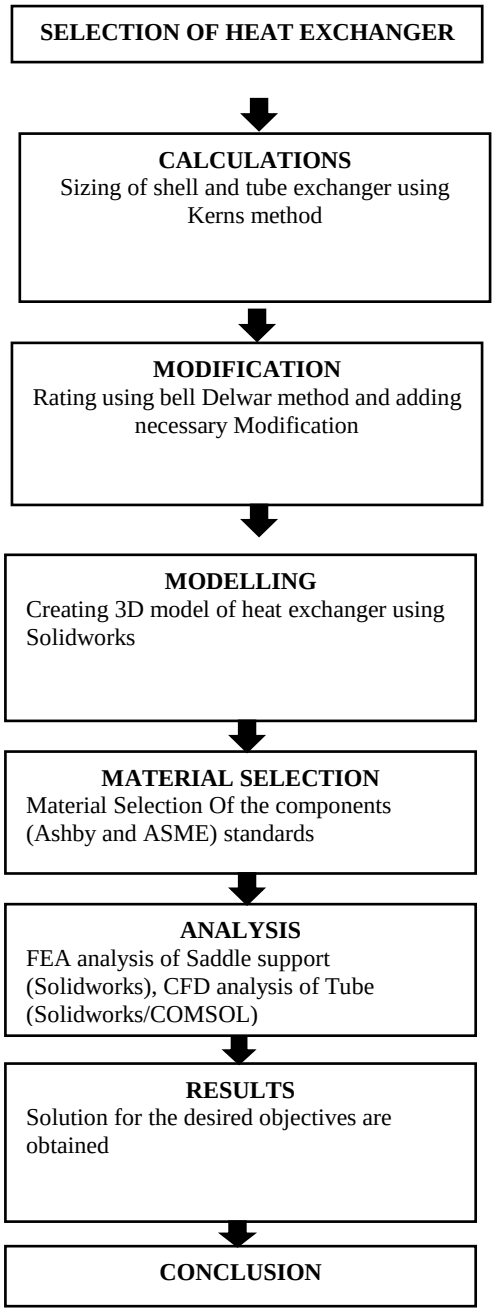

V. CALCULATION

The Kern method is been used to estimate the sizing of the heat exchanger while the Bell Delwar method is used for the rating analysis.

TABLE I
The Input Parameters

Wort (Tube Side)	
Inlet temperature	140°C
Thermal conductivity	0.6044 W/m-K
Density	971.79 kg/m^3
Mass flow rate	150 kg/sec

Dynamic viscosity	0.000354 N. s/m^2
Specific heat capacity	3827 J/kg-K
Water (shell side)	
Inlet temperature	30°C
Density	995.65 kg/m^3
Mass flow rate	50 kg/sec
Thermal conductivity	0.64144 W/m-K
Dynamic viscosity	0.0007972 N. s/m^2
Specific heat capacity	4117.5 J/kg-K

Outputs:
Outlet Temperature of wort:116°C
Heat duty of heat exchanger:13587.75 Kw
Number of tubes: 334
Tube side heat transfer:12812.5245 W/m^{2}K
Overall heat transfer coefficient:0.00003265 W/m^{2o}C

Number of baffles:5
Overall pressure drop :0.3947 bar
Number of Passes: 1

VI. MATERIAL SELECTION

Material selection is an important task carried out in all projects. The material attributes are based on the function, objective and constrains of the design which ensures the design is technically fit to deliver the desired performance. There are many methods for selecting optimized materials, such as Cost per unit property method, Weighted property method, Digital logic method.

Material selection
↓
Screening Parameters
↓
Selection of Property Chart
↓
Listing Candidate Materials
↓
Potential material selection through comparing various property
↓
Optimum material selection

The above flow chart gives an overview of the whole process. This process is used mainly for critical part while designing, so here we have 3 critical parts: Saddle support, Tubes, Shell.

A. Optimization of saddle support

Table II
Screening Parameters

Function	To support Heat Exchanger assembly weight
Objective	Reduction of weight
Variable	Plate thickness, Density
Constraint	Shape

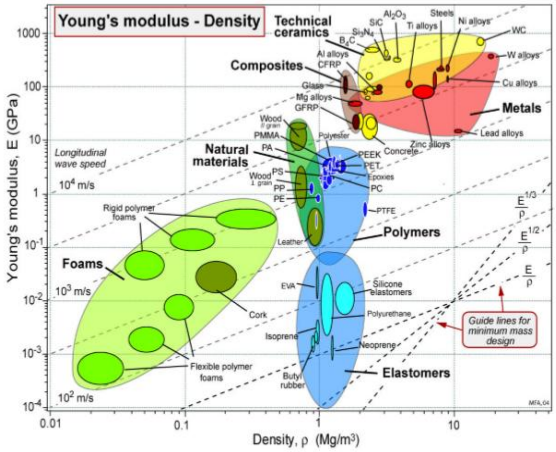

Fig3 Selected Property chart of density Vs Youngs modulus

By using of Granta Design software the listed candidate materials are:

1. ASTM 516 GR-70
2. IS 2062
3. IS2002
4. IS 2062 GR A
5. S 2475 GR

These obtained candidate materials from the property chart are then further used to compare and evaluate candidate material. The properties of the candidate materials are evaluated then their performance index is been calculated to choose an optimized material.

Table III
Material Performance Index

Sr. No.	Material	Performance Inde
1.	ASTM 516 GR-70	51.8
2.	IS 2062	45.16
3.	IS2002	27.06
4.	IS 2062 GR A	46.23
5.	S 2475 GR	46.56

In this case optimized material is **ASTM 516 GR-70.**
Similarly, the optimized material for other components are:

Components	**Material**
Shell	**Titanium Alloy**
Tubes	**Elkonite 2050C**
Saddle	**ASTM 516 GR-70**

VII. ANALYSIS

A. The FEA analysis of Saddle Support

The component was designed, assembled, and the analysis was carried out using Dassault systeme's SOLIDWORKS 2019.

Designs Modules:

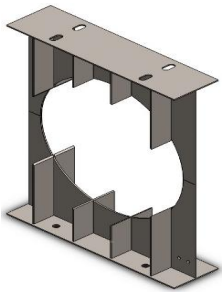

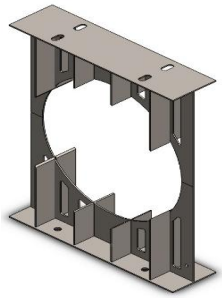

Fig.4 Saddle support without slots **Fig.5 Saddle support with slots**

1) Saddle support without slots (thickness of 8mm):

Applying ASTM 516 GR-70 material Force of 45000 N on inner curvature of saddle support.

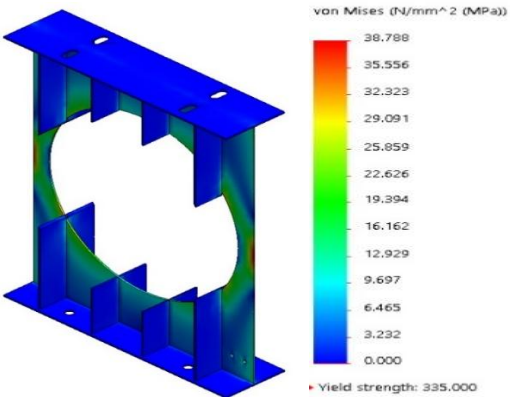

Fig. 6 Maximum stress acting is 38.788 MPa

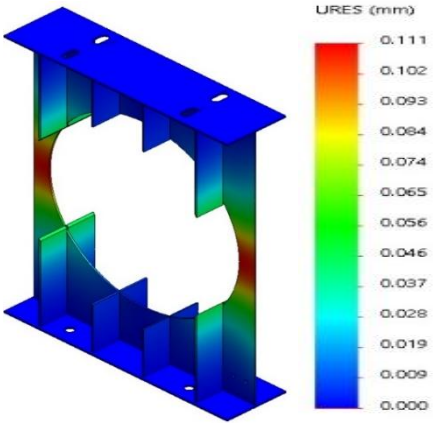

Fig 7 Highest displacement on component is 0.111mm

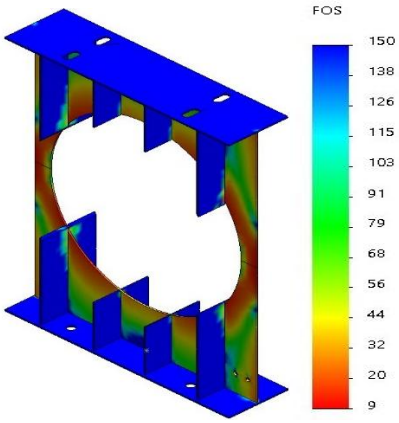

Fig 7 Minimum FOS is 9

2) Saddle support with slots (thickness of 8mm):

Applying ASTM 516 GR-70 material Force of 45000 N on inner curvature of saddle support.

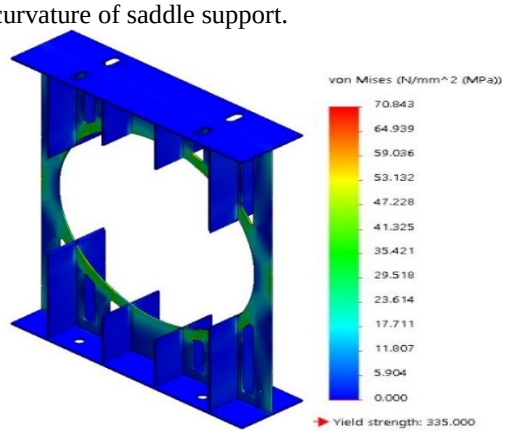

Fig. 8 Maximum stress acting is 7.84 MPa

Table VI
Result of Analysis of Saddle Support

Design (Thickness of material) (mm)	Maximum Stress (N/mm^2 (MPa))	Maximum displacement (mm)	Minimum FOS	Weight (kg)
Design 1 (without slot)				
8	38.788	0.111	9	150.104
16	19.466	0.055	17	299.168
20	15.608	0.044	21	373.271
Design 2 (with slot)				
8	70.843	0.148	5	137.98
16	35.185	0.073	10	274.922
20	27.196	0.058	12	342.961

For the heat exchanger application FOS should be greater than 8, hence **saddle support without slots (8mm thickness)** is found to be optimum in terms of Stress, displacement, FOS and weight.

B. CFD analysis of Tube

CFD is branch of analysis in which fluid behavior through and around the system is studied. The component was also designed and the fluid analysis within tube was carried out using COMSOL Multiphysics.

Tube Dimensions: Inlet Parameters

- Inner Diameter: 0.016mm
- Outer Diameter: 0.020mm
- Thickness: 0.002mm
- Length: 4.86m (actual) 0.02(analysis)
- Inlet velocity: 2.806m/sec
- Temperature inlet :413 K
- Temperature surface: 303 K

Material:

Inner Fluid: Water

Tube Material: Elkonite 2050C

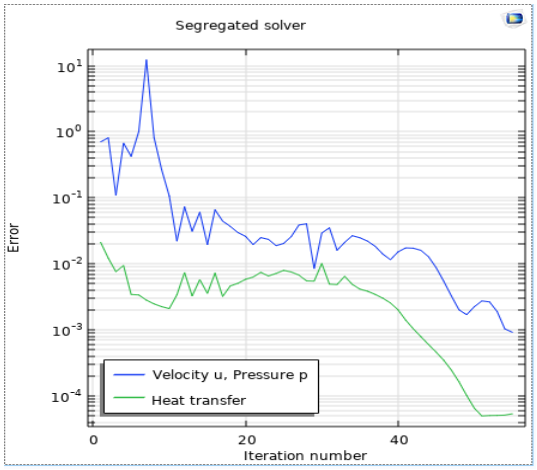

Fig9: plot of pressure, velocity, heat transfer

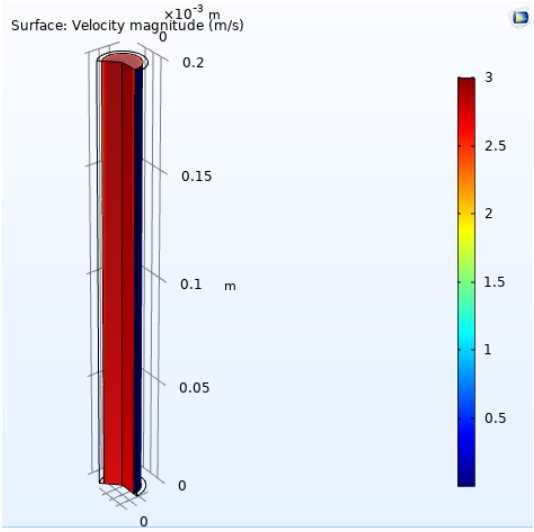

Fig10: Velocity variation

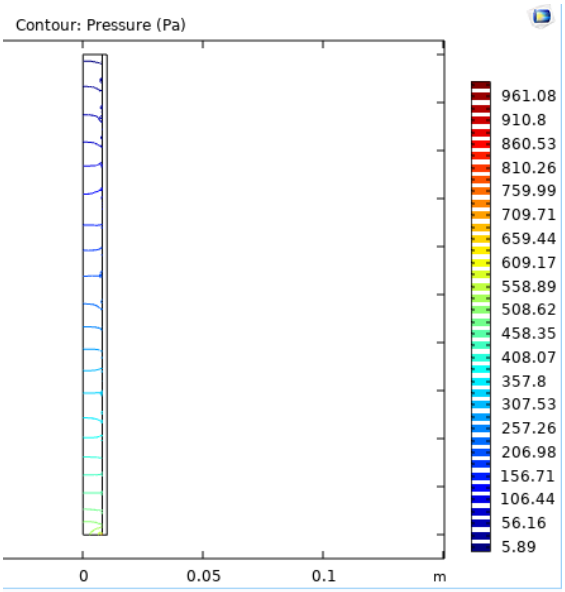

Fig11: Pressure Variation

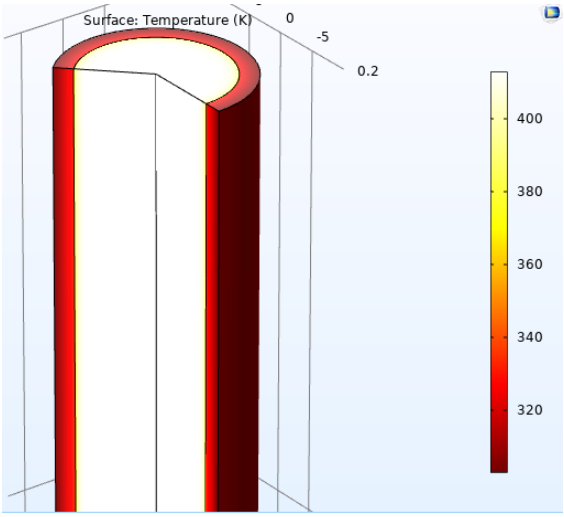

Fig12: Surface Temperature

VIII. RESULTS

Sr. no	Parameters	Value
1.	The optimized pressure drop	0.39 bar
2.	The optimized overall Heat transfer coefficient	0.00003265 W/m^{2o}C
3.	The optimized weight of saddle support:	150.104 kg

IX. CONCLUSION

The study investigated different parameters dealing with the design and analysis of shell and tube heat exchanger for brewery application. It started with briefing the basic idea of double stack heat exchanger, application and the objectives of designing and analyzing.

Survey carried out depicted the enhancing parameters responsible for the performance of heat exchanger. Important factors were the inputs as per the requirements and the calculated results. material selection for critical parts was carried out using the ASHBY and ASME standards' and CFD analysis helped in analyzing the parameters such as flow,FOS,stress.Number of iteration in the entire process helped in optimizing the pressure drop which reduces the amount of energy needed by the pump to push the fluid in heatexchanger,increses the turbulence of the flow ,reduces the shear force produced by the velocity gradient which overall results in increasing the heat transfer rate and thereby increases the efficiency of Heat Exchanger.

REFERENCES

1. L. Liu, N. Ding, J. Shi, N. Xu, W. Guo, C. Wu, Failureanalysis of tube-to-tubesheet welded jointsin a shell-tube heat exchanger, Case Stud.Eng. Fail. Anal. (2016) 32–40.
2. C. Yu, Z. Ren, M. Zeng, Numerical investigation of shell-side performance for shell and tube heat exchangers with two different clamping type anti-vibration baffles, Appl. Therm. Eng. (2018).
3. Y. G. Lei, Y. L. He, R. Li, and Y. F. Gao, "Effects of baffle inclination angle on flow and heat transfer of a heat exchanger with helical baffles,"
4. H. Kotwal and D. S. Patel, "CFD Analysis of Shell and Tube Heat Exchanger- A Review," Int. J. Eng. Sci. Innov. Technol., vol. 2, no. 2, pp.325–329, 2013.
5. J. F. Zhang, S. L. Guo, Z. Z. Li, J. P. Wang, Y. L. He, and W. Q. Tao, "Experimental performance comparison of shell-and-tube oil coolers with overlapped helical baffles and segmental baffles," Appl. Therm. Eng., vol.58, no.1–2, pp.336–343, 2013.
6. D. Bhatt and P. M. Javhar, "Shell and Tube Heat Exchanger Performance Analysis," vol. 3, no. 9, pp. 1872–1881, 2009.
7. C. Dong, D. Li, Y. Zheng, G. Li, Y. Suo, and Y. Chen, "An efficient and low resistant circumferential overlap trisection helical baffle heat exchanger with folded baffles," Energy Convers. Manag., vol. 113, pp. 143–152, 2016.
8. N. B. Dahare, "Review on Experimental Analysis and Performance Characteristic of Heat Transfer in Shell and Twisted Tube Heat Exchanger," vol. 3, no. 1, pp. 981–985, 2015.
9. circumferential overlap trisection helical baffle heat exchanger with folded baffles," Energy Convers. Manag., vol. 113, pp. 143–152, 2016.

AUTHORS PROFILE

Aentriksh Khanzode is an Undergraduate research student of MIT Academy of Engineering and a co-author to this research paper. He has worked on design of onion harvesting machine and design of jigs and fixtures for various machine components.

Tejashree Kadus is an Undergraduate research student of MIT Academy of Engineering and a co-author to this research paper. She has done research work on microcontroller based mini projects and published research paper on Smart Waste management, Smart Gas kit.

Pranjal Patil is an Undergraduate research student of MIT Academy of Engineering and a co-author to this research paper. She has done research work on design of Bullet proof jacket and study of Food technology.

Suraj Mali is an Undergraduate research student of MIT Academy of Engineering and a co-author to this research paper. he has recently worked on design and analysis of Electromagnetic engine, Flywheel with contactless magnetic bearing.

Sudesh Powar working as a Assistant Professor in MIT Academy of Engineering. His inter- disciplinary research interests include computational fluid dynamics and heat transfer. He has teaching experience of 4.5 years and industrial experience of 1 year