International Journal of Recent Technology and Engineering (IJRTE)
ISSN: 2277-3878 (Online), Volume-8 Issue-6, March 2020

Disease Detection in Paddy Crop using CNN Algorithm

Sharath N Payyadi, Varun S D, Satya Gururaj Kalluru, Archana R Kulkarni

Abstract*: *In this paper, we propose a technique for early detection of the diseases like blast and blight in paddy crop using one of the deep learning algorithms called as CNN algorithm [8]. The entire system works on the Raspberry-pi which acts as processing unit for the proposed system. The well trained keras model to predict the disease in paddy leaf is developed using CNN algorithm [5]. As the symptoms of the blast and blight disease are detected using feature of the paddy leaf, so the model is trained using the diseased image data set. The pi-camera will capture the image of the leaf and the captured image will be processed by the python script running on raspberry pi. The images will be captured at different angle with respect to raspberry-pi. The trained model will predict whether the processed image of the leaf contains the symptoms of the disease. The proposed system also includes the feature which will alert the farmer about spreading of the disease by using the GSM module to send the message to the farmer of the field. Also the pesticides are suggested to farmers to control the further growth of the germs causing the disease. In India paddy is grown as the staple crop. The paddy crop is mostly damaged due to the leaf diseases called as blast and blight disease[4]. About 20%-30% of the yield will be destroyed by the blast and blight diseases respectively [14]. Hence, by implementing the above proposed system the disease can be detected at the early stage and loss can decreased.

***Keywords* : *Raspberry-pi, CNN algorithm, Blast and blight disease in paddy crop*.**

I. INTRODUCTION

Agriculture is the backbone of any developing country and as such should be paid attention to. Agricultural sector is faces various challenges including shortage in farmland, land ownership; economic challenges including globalization, shortage in labor etc., and environmental challenges including climate changes. Agricultural production is expected to double, to meet the food demands, as the worlds population increases at the current rate. One of the main reason of loss in this sector is infection of the crop. In this paper, we present a novel approach to address the problem of infection in the staple foodcrop paddy. Round the clock monitoring of any large space such as crop fields is a daunting task and cannot be efficiently carried out by human ability alone. Hence we propose the automation of this task through the proposed system.

Automation is the next phase in industrial growth all over the world. However in this regard the implementation in the field of agriculture on a large scale has been relatively slow. Agriculture has largely been dependent on the involvement of humans. However this leaves a lot of responsibility on the farmer for tending to acres of land, exhausting them. Inevitably this in time will lead to some oversight on their part causing losses. Crop infestation is one of the reasons for these losses. Identification of complex diseases that may affect the crop is essential.

Here we propose using a Raspberry Pi system in order to continuously monitor crop fields with the help of camera feeds. The camera modules will capture images of its surrounding crops and send the images to the Pi. The examined diseases(in this case blast and blight) will cause physical changes in the leaves of the paddy crop[14]. These changes can be seen by the cameras that are attached to our Raspberry-pi. In previous studies, standard feature extraction methods on plant leaf images to detect disease have been used[4]. In this project deep learning concept is used to detect diseases[3]. Our proposed project includes various phases of implementation namely dataset creation, feature extraction, training the classifier and classification. The created datasets of diseased leaves are trained using model created using keras and tensorflow libraries to classify diseases. For extracting features of an image we use Convolution nueral network algorithm[13]. Overall, using deep learning to train the large data sets available publicly gives us a clear way to detect the disease present in plants in a colossal scale.

II. MOTIVATION

Most of the population of India is dependent on agriculture for livlihoods and contributes significantly in the GDP of the nation. Rice is the major staple food of the country and is in every diet in the region. However rice crop is affected by two diseases that severly damages the yeild in a relatively short amount of time. These are rice blast and blight. Rice blast causes economically significant crop losses annually[14]. Each year it is estimated to destroy enough rice to feed more than 60 million people.

Manuscript received on March 15, 2020.
Revised Manuscript received on March 24, 2020.
Manuscript published on March 30, 2020.
* Correspondence Author
Sharath N Payyadi*, UG student, ECE department, RNS institute of technology, Bangalore, INDIA.
Varun S D, UG student, ECE department, RNS institute of technology, Bangalore, INDIA.
Kalluru,UG student, ECE department, RNS institute of technology, Bangalore, INDIA.
Dr. Archana R Kulkarni, ,Assistant Professor, ECE department, RNS institute of technology, Bangalore, INDIA.

Rice blast is the most important disease concerning the rice crop in the world. Since rice is an important food source for much of the world, its effects have a broad range.

The disease has never been eradicated from a region.

Bacterial blight of rice has high epidemic potential and is destructive to high-yielding cultivars in both temperate and tropical regions especially in Asia. Found worldwide in temperate and tropical regions, it can destroy up to 80 percent of a crop if the disease develops early. Bacterial leaf blight is a prevalent and destructive disease which affects millions of hectares throughout Asia.

Automation is one of the major trends driving innovations in the current industrial revolution. This can play a significant role in the field of agriculture , and help increase overall productivity and increase the efficiency at various stages such as cultivation and harvesting. Here we suggest the use of automation to monitor the crop for infections and reduce the manual labour of farmer in monitoring their fields.

III. RELATED WORKS

The major techniques for detection of plant diseases are: back propagation neural network (BPNN), Support Vector Machine (SVM) as seen in the work of Monzurul Islam, Anh Dinh , Khan Wahid , Pankaj Bhowmik[1], K-nearest neighbor (KNN), and Spatial Gray-level Dependence Matrices (SGDM), convolution neural network such as in the work proposed by Yusuke Kawasaki, Hiroyuki Uga ,Satoshi Kagiwada and Hitoshi Iyatomi [2]. We have chosen CNN as it is a more accurate and effective method compared to SVM.

Endang Suryawati, Rika Sustika, R.SandraYuwana, AgusSubekti, Hilman F. Pardede[3] used the CNN techniques to analyze the healthy and diseased plants leaves. In order to identify the disease affected crops, leafs of crops are collected from the plants and the image processing is performed on the images for extracting features. Then, the deep learning algorithm is used to build the model and leafs are tested with the model for identifying the affected leaf.

In the work proposed by Farhana Tazmim, Nipa Khatun; S.M.Mohidul Islam[4], Content based paddy leaf disease recognition and remedy prediction using support vector machine ,after recognition of paddy leaf disease by support vector machine classifier, the predictive remedy is suggested that can help agriculture related people and organizations to take appropriate actions against these diseases.

Surbhi Jain and Joydip Dhar[5] proposed a generalized project which is used to detect objects using the deep learning concept. In this paper, they confronted an advance deep learning method, Convolutional Neural Network (CNN), for studying feature representations and similarity measures. They explored the applications of CNNs towards solving classification and retrieval problems which has been useful in the development of our work.

Halil Durmus, Ece Olcay Gunes and Murvet Kirci [6] built a robot which is used to detect the disease in tomato plant using deep learning concept. This work aimed at running deep learning algorithm continuously in robot which used to move around fields. The images were captured in real time by using RGB cameras and captured images were used to detect the disease in plants by using deep learning model. Deep learning model has been trained using the tomato leaf dataset provided by Plant village website.

A model which used CNN to identify the disease in tomato and apple leaf was proposed by Rajleen Kaur and Sandeep Singh Kang [7], An enhancement in classifier support vector machine to improve plant disease detection. This model also used Dense layers and sigmoid functions to increases the accuracy of prediction. The overfitting problem has been reduced by using dropout value as 0.2. As a result of these, model achieved 87% of accuracy. As stated earlier CNN algorithm was chosen based on the outcomes of their work which determined the effectiveness of CNN over SVM in predicting correct outcomes.

An approach that integrates image processing and machine learning to allow diagnosing diseases from leaf images was proposed by Mercelin Francis and C.Deisy[8]. This automated method classifies diseases on potato plants from a publicly available plant image database called `Plant Village'. The segmentation approach and utilization of support vector machine demonstrate disease classification over 300 images with an accuracy of 95%.

IV. SYSTEM ARCHITECTURE

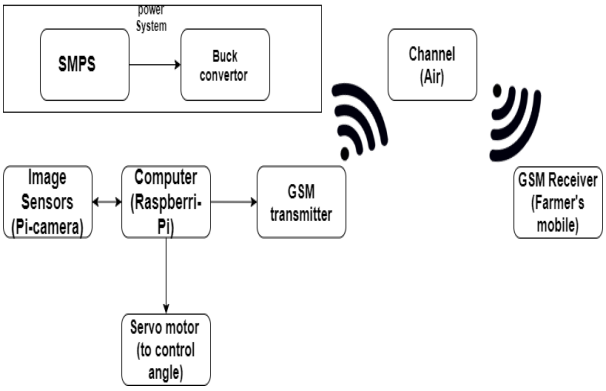

Fig.1. System Architecture

The system architecture is as shown in Fig 1. Control system consists of seven blocks. The images from the real world will be taken using the pi-camera which is acting as the image sensor in our project. Once the image is captured, then it processed using the commands of Python script which is running on the Raspberry-Pi. The trained model will be saved as H5 file (Hierarchical Data Format file) which is trained with the images having the symptoms of the blast and blight disease. This model will predict whether the symptoms of the disease are present or not in the captured image. If the symptoms are predicted then computer will activate the GSM module and sends the alert message to the farmers mobile. This procedure will continue in all the four direction, which is rotated using the servo motor.

A. Pi-camera

In this project image sensor is required to capture the image of the leaf in the field to detect the disease. So, the image sensor used will be Pi-camera.

Pi camera is used to take the picture of the leaf in the farm field and this pi-camera can be controller from the python script and Picamera library.

Fig.2. Pi Camera

B. Servo motor

Servo motor used in this system is MG996r. This has the rotation angle of 180 degree. "SERVO" Python library which is used to control the servo motor rotation angle. The servo motor is used to rotate the system so that pi camera will be able to capture images at different angle.

Fig .3. Servo motor

C. GSM module

GSM modem used in this system us GSM800A modem. The GSM module is used to send the message to the Farmers mobile when the symptoms of disease are detected. Since the internet cannot be provided in the rural areas. So, the GSM module is used, so that it can use 2G network to send the message. The "Serial" python library can be used to initialize the GSM modem.

Fig. 4. GSM Module

D. Raspberry-pi

The raspberry pi is one of the smallest and portable computers. The image of the leaf captured by the pi-camera will be stored and processed by the Raspberry pi. The trained model will be stored in the raspberry pi and model will predict the disease present in the leaf. Raspberry pi is also used to control the angle of servo motor. It also initiates the GSM model to send the message.

Fig. 5. Raspberry Pi Model 3

V. IMPLEMENTATION

Implementation of the system is divided into two parts i.e., implementation of hardware and implementation of software. The hardware implementation includes all the components - Raspberry pi, Servo motors, pi camera, GSM module and power supply. The software part includes the development of the keras model.

A. Hardware implementation

The pi camera is used as an image sensor which is used to capture the image of the paddy leaf. The control system consists of portable computer Raspberry pi along with image sensor pi camera. The sole purpose of Raspberry pi is to give commands to camera to capture image. It also processes the captured image and detects whether the symptoms of disease is present or not. If the symptoms are detected then it initiates the GSM module to send the message. The servo motors are used to rotate the system to capture the image at different angle. The commands for servo motor are given by the python program running on the portable computer. To make the system energy efficient the servo motor is made to rotate once in thirty minutes. The power supply consists of SMPS and buck convertor. The buck convertor is used to lower down the voltage to required level to run the Raspberry PI and GSM module.

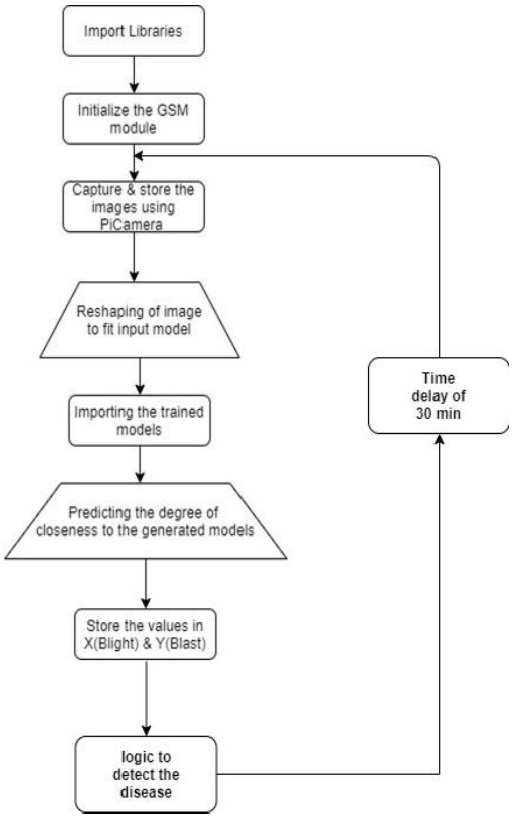

Fig. 6. Indicates the flow of the program

Fig. 6 indicates the flowchart of program and Fig. 7 indicates the logic used to detect the symptoms. First the libraries required for the running some hardware components are imported. The specific libraries are used to initiate the hardware components. The GSM module that is used to send the message is initialized, so that if symptoms of the disease is detected it will send the message.

The camera module is initialized and made to capture the image once in thirty minutes, so that system doesn't consume more power. This will be stored in the memory of raspberry pi. Then the image will be processed so that it best suits for the further detection of disease. The trained model which is used to detect the disease will be imported. Then the trained model will predict the amount of symptoms in the processed image. The degree of symptoms will be predicted by the value between 0 and 0.5. If the symptoms of disease are more, then the value will be near to 0. Since this system will predict the two diseases namely blast and blight. So the two models will predict the amount of closeness and store it in the variable X and Y.

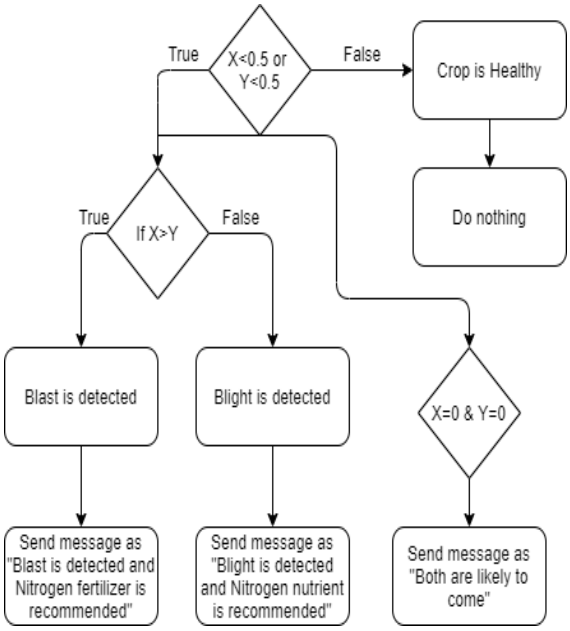

Fig. 7. Logic to detect disease

Fig. 7 indicates the logic used by the model to determine the symptoms of the diseases. If the value of X or Y less than 0.5, then that indicates either blast or blight is present. According the condition mentioned in the flowchart the disease will be detected and the GSM will send the message to the farmer. Since, both blight and blast will have approximately same characteristics. Sometimes both models will predict the value as zero. In that case it will send the messages as particular disease are likely to come. If the model predicts as healthy leaf, then no message will be sent to the user.

B. Keras model

To predict the disease in plants the trained keras model is created using the CNN algorithm. The sequential model consists of many layers. The layers consists of relu activation layer, max_pooling2d layer, conv_2d layer, flatten and dense layer. The amount of layers used is as shown in Fig. 8 and Fig. 9. In this model the 'adam' optimizer is used.

The created model will predict the symptoms of blast and blight diseases in plants. The model is trained using images of blast and blight disease in paddy leaf. The dataset of 400 images are used to train the model.

We have created two models. Two models are blast model and blight model. First model will check if the captured image contains the symptoms of blast disease or is it healthy. Second model will check for the symptoms of blight diseases.

So if the blight diseased image is captured and provided to the blast model to predict, training is done in such a way that model will predict it as a healthy leaf and blight model will detect the symptoms. This is true in the case of blast diseased image and blight model.

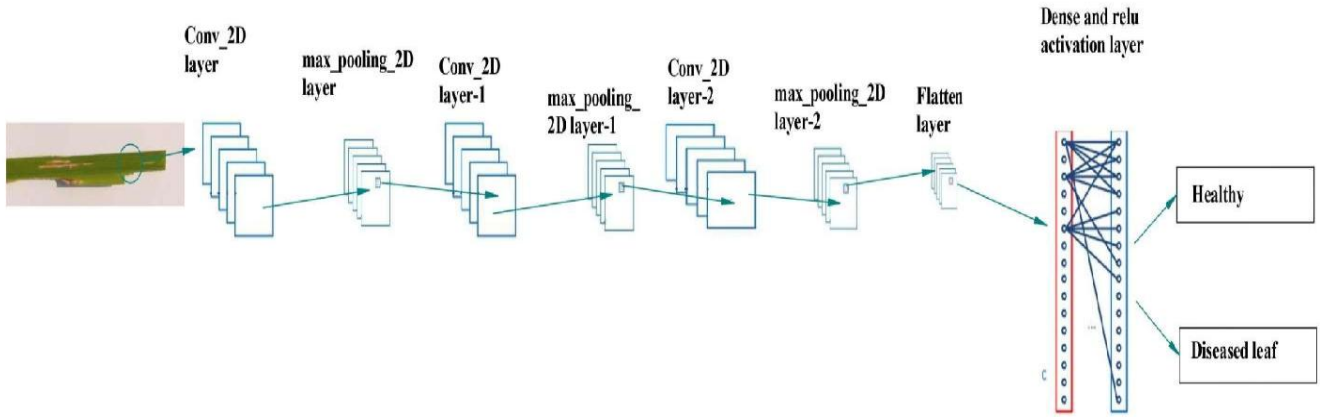

Fig. 8. Details of the layers used in generated model

```
Model: "sequential"
_________________________________________________________________
Layer (type)                 Output Shape              Param #
=================================================================
conv2d (Conv2D)              (None, 148, 148, 32)      896
_________________________________________________________________
max_pooling2d (MaxPooling2D) (None, 74, 74, 32)        0
_________________________________________________________________
conv2d_1 (Conv2D)            (None, 72, 72, 64)        18496
_________________________________________________________________
max_pooling2d_1 (MaxPooling2 (None, 36, 36, 64)        0
_________________________________________________________________
conv2d_2 (Conv2D)            (None, 34, 34, 64)        36928
_________________________________________________________________
max_pooling2d_2 (MaxPooling2 (None, 17, 17, 64)        0
_________________________________________________________________
flatten (Flatten)            (None, 18496)             0
_________________________________________________________________
dense (Dense)                (None, 128)               2367616
_________________________________________________________________
activation (Activation)      (None, 128)               0
_________________________________________________________________
dropout (Dropout)            (None, 128)               0
_________________________________________________________________
dense_1 (Dense)              (None, 1)                 129
_________________________________________________________________
activation_1 (Activation)    (None, 1)                 0
=================================================================
Total params: 2,424,065
Trainable params: 2,424,065
Non-trainable params: 0
```

Fig. 9. Layers used in generated model

Since the two models is created which includes blight model and Blast model. So the both models are trained for thousand epochs. For each epoch the accuracy is measured for training images. The blast model is giving the accuracy of 96.77% and blight model is giving the accuracy of 95.47%. The graph indicating the accuracy of blast and blight model is as shown in Fig. 10 and Fig .11 respectively.

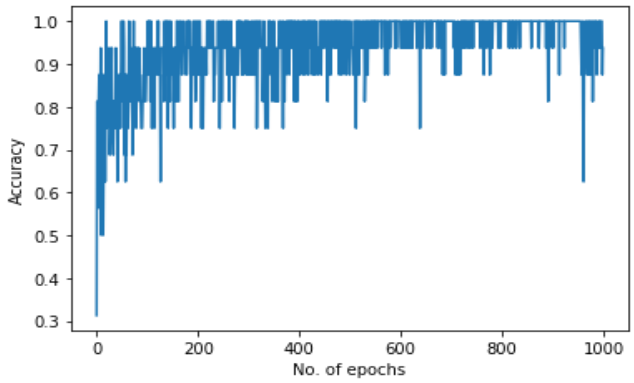

Fig.10. Graph indicating the accuracy achieved for each epoch of blast model

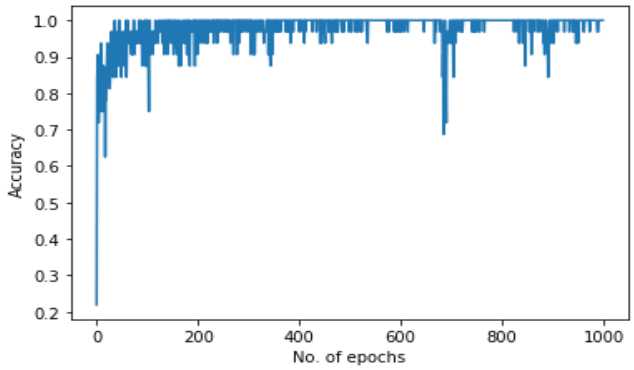

Fig. 11. Graph indicating the accuracy achieved for each epoch of blight model

VI. EXPERIMENT AND RESULTS

The system setup is as shown in the Fig.12. The images of the leaf will be taken by the camera. This will be stored in the jpg format. The one of the example of stored image is as shown in Fig. 13.

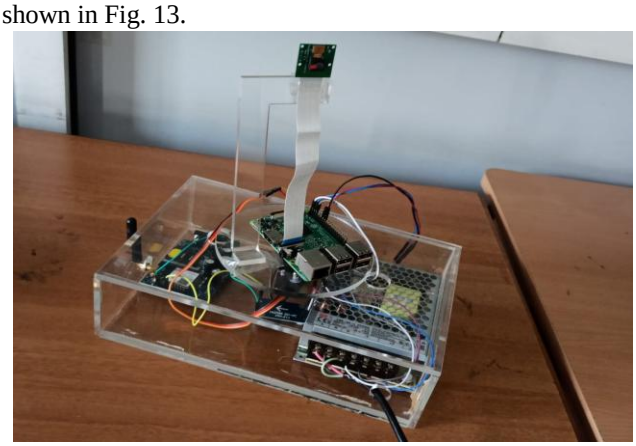

Fig. 12. Setup of the system

Fig. 13. Image stored

The two trained models will predict the symptoms of the diseases. Blight model will check for the symptoms of the blight disease in the image stored. If the symptoms are not present, it will return as the healthy condition. Then the blast model will predict for the symptoms of the blast disease.

The Fig 14 and 15 will show the image of blast disease and blight respectively. So the value predicted by the blight and blast model is as shown in Table I. So, the Table I consists the value predicted for the image in Fig. 13, Fig .14, Fig .15.

Fig. 14. Blast diseased leaf

Fig. 15. Blight diseased leaf

Table- I: Values predicted by the models

Figure	Blast model value	Blight model value	Inference
Figure13	0.7534	0.6512	Healthy
Figure14	4.5e^-2	0.5532	Blast
Figure15	0.7497	0.0138	Blight

Table-II : Values predicted by blast model and blight model for various examples

Experiment	Blast model value	Blight model value	Inference
1	0.548	0.672	Healthy
2	0.62	0.024	Blight
3	5.7e^-2	0.54	Blast
4	0.36	0.24	Blight
5	0	0	Both are likely to come
6	0.27	0.045	Blight
7	0.95	0.87	Healthy
8	9974	0.845	Healthy
9	0.41	0.87	Blast
10	0.36	0.097	Blight

The experimental results for different examples which were tried during the testing of the proposed system are tabulated in Table. II

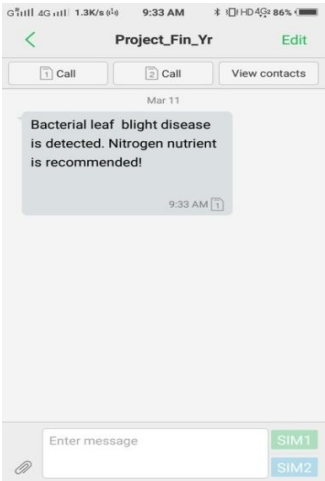

Fig. 16. Message

If the disease is detected by the any of the models, Raspberry pi will initiate the GSM model to send the alert message to the farmers mobile as shown in the Fig 16. This message will also consist of the remedies that can be taken to control the spread of the disease.

VII. CONCLUSION AND FUTURE SCOPE

This research presents a system which detects the diseases like blast and blight in paddy crop as early as possible using CNN algorithm. The Raspberry-Pi is used as the portable computer. The keras model is trained with four hundred images dataset of diseases leaf image and loaded into Raspberry-Pi. The leaf image on the field is captured using Pi-camera and later processed by python script. The keras model is used to predict the disease in captured image. If the disease is detected the alert message is sent to farmer using the GSM module. It is ensured that all the sides of field is coverd by rotating the entire system using servo motor.Using this technique, we got the success rate of 95% accuracy. Also, we have tested with the diseased paddy leaf samples which are collected from Dhamtari district of Chhattisgarh for the verification of the real time working of the system and we are successful in our attempt.

In the future we can also include more images dataset and can increase accuracy rate. Also we can improve the accuracy of the captured images by using the specific filters.

VIII. ACKNOWLEDGMENT

We wish to thank Almighty God who gave us the opportunity to successfully complete this project. We would like to express our profound thanks to Director, Principal and Dept. of ECE, RNS Institute of Technology, for their valuable support and also we extend our sincere thanks and heartfelt gratitude to our Internal guide Dr. Archana R Kulkarni , Asst. Professor, Dept. of ECE, RNS Institute of Technology, for providing constant support and appreciation. We also express truthful thanks to Dr. K P Vasantha Shetty and Chandrakanth K for giving information about blight and blast diseases.

REFERENCES

1. Monzurul Islam; Anh Dinh ; Khan Wahid ; Pankaj Bhowmik-Detection of potato diseases using image segmentation and multiclass support vector machine-2017 IEEE 30th Canadian Conference on Electrical and Computer Engineering(CCECE).
2. Yusuke Kawasaki; Hiroyuki Uga; Satoshi Kagiwada; Hitoshi Iyatomi,Basic Study of Automated Diagnosis of Viral Plant Diseases Using Convolutional Neural Networks- 11th International Symposium, ISVC 2015, Las Vegas, NV, USA, December 14-16,2015.

3. Endangsuryawati, Rika Sustika, R.sandrayuwana, agussubekti, Hilman F. Pardede, "Deep Structured Convolutional Neural Network for Tomato Disease Detection", Advanced Computer Science and Information Systems(ICACSIS) 2018 International Conference.
4. Farhana Tazmim, Nipa Khatun; S.M.Mohidul Islam, "Content based paddy leaf disease recognition and remedy prediction using support vector machine", Computer and Information Technology(ICCIT) 2017 20th International conference.
5. Surbhi Jain, Joydip Dhar, "Image based search engine using deep learning", Contemporary Computing (IC3) 2017 Tenth International Conference.
6. Halildurmus, eceolcaygunes, murvetkirci, "Disease detection on the leaves of the tomato plants by using deep learning", Agro-Geoinformatics 2017 6th International Conference.
7. Rajleen Kaur, Sandeep Singh Kang, "An enhancement in classifier support vector machine to improve plant disease detection", moocs, Innovation and Technology ineducation (MITE) 2015 IEEE 3rd International Conference.
8. Mercelin Francis, C.Deisy, "Disease Detection and Classification in Agricultural Plants using Convolutional Neural Networks – A Visual Understanding", Signal Processing and Integrated Networks (SPIN) 2019 6th International Conference.
9. Jayamala K. Patil1 , Raj Kumar2. Advancesin Image Processingfor Detectionof Plant Diseases-Journal of Advanced Bioinformatics Applications and Research ISSN 0976-2604 Vol 2, Issue 2, June-2011, pp135-141
10. Sabah Bashir1 , Navdeep Sharma -Remote Area Plant Disease Detection Using Image Processing. IOSR Journal of Electronics and Communication Engineering (IOSRJECE) ISSN : 2278-2834 Volume 2, Issue 6 (Sep-Oct2012)
11. Xiaochun Mai, Max Q.H.Meng "Automatic lesion segmentation from rice leaf blast field images based on random forest", Real-time Computing and Robotics (RCAR) 2016 IEEE International Conference.
12. Hilman F. Pardede, Endang Suryawati, Rika Sustika, Vicky Zilvan, "Unsupervised Convolutional Autoencoder- Based Feature Learning for Automatic Detection of Plant Diseases", Computer, Control, Informatics and its Applications (IC3INA)2018
13. Plant Disease Detection by Imaging Sensors – Parallels and Specific Demands for Precision Agriculture and Plant Phenotyping
14. Wasin Sakulkoo, Miriam Oses-Ruiz,Ely Olivera Garcia, Darren M. Soanes, George R. Littlejohn, Christian Hacker, Ana Correia, Barbara Valent, Nicholas J. Talbot "A single fungal MAP kinase controls plant cell-to-cell invasion by the rice blast fungus", Science 359,1399-1403(2018).

AUTHORS PROFILE

Mr. Sharath.N.Payyadi is currently pursuing Bachelor of engineering in Department of Electronics and communication from RNS Institute ofTechnology, Bangalore, INDIA since 2016.

Email: sharathnp1998@gmail.com

Mr. Varun S.D is currently pursuing Bachelor of engineering in Department of Electronics and communication from RNS Institute of Technology, Bangalore, INDIA since 2016.

Email: svarun1997@gmail.com

Mr. Satya Gururaj .K is currently pursuing Bachelor of engineering in Department of Electronics and communication from RNS Institute of Technology, Bangalore, INDIA since 2016.
Email: satyagururaj.kaalluru@gmail

Dr. Archana R Kulkarni is currently working as an Assistant professor in the Department of Electronics and communication from RNS Institute of Technology, Bangalore, INDIA.

Email: archana.anv@gmail.com