International Journal of Recent Technology and Engineering (IJRTE)
ISSN: 2277-3878 (Online), Volume-8 Issue-6, March 2020

Design, Analysis and Fabrication of Safe Holder and Cam Dies in Injection Molding

B Joga Rao, Ch Rupendra, D Vivek, D Yuva Sai, B Sudhakar Raju

Abstract: ***Injection molding is one of the very significant methodologies in the plastic manufacturing industry. Production of any shape in the injection molding, mold with cavity must require. For this mold making three phases were involved in this project starting from design, analysis, manufacturing respectively. The objective of this project is to introduce detailed steps on design mold and using the simulation software to analyze the material flow, temperature and pressure characteristics of the product. The product designed and analyzed for this project is SAFE HOLDER and CAM. The manufacturing of mold is done by using advanced machinery such as CNC.***

The design and analysis of this product and mold were made by the designing analysis software CATIA V5, ANSYS 15.0, which is then stimulated by the use of Fluid Flow (Fluent) tool.

This project was very useful in knowing the fluid characteristic behavior subjected to flowing inside the mold and also observed the variation of values with respect to given values at each stage.

In this project, the analysis performed with taking polypropylene as a fluid from propylene polymer and steel as solid material for the die with inlet values are 230℃ temperature and 15m/s velocity.

Keywords: analysis, characteristics, die, design, Mold

I. INTRODUCTION

Mold design is the first step for developing any variety of shape required in the time of manufacturing with a specific dimension to avoid defects occurring after the actual part is removed from the die cavity in injection molding [1].

Plastic materials exhibit very convoluted properties, the challenges are facing in the making of parts and obtain characteristics required involves difficulty.

Manuscript received on March 15, 2020.
Revised Manuscript received on March 24, 2020.
Manuscript published on March 30, 2020.

* Correspondence Author

B Joga Rao*, Associate Professor, Department of Mechanical Engineering, Godavari Institute of Engineering & Technology (A), Andhra Pradesh, India

Ch Rupendra, UG Students, Department of Mechanical Engineering, Godavari Institute of Engineering & Technology (A), Andhra Pradesh, India

D Vivek, UG Students, Department of Mechanical Engineering, Godavari Institute of Engineering & Technology (A), Andhra Pradesh, India

D Yuva Sai, UG Students, Department of Mechanical Engineering, Godavari Institute of Engineering & Technology (A), Andhra Pradesh, India

B Sudhakar Raju, UG Students, Department of Mechanical Engineering, Godavari Institute of Engineering & Technology (A), Andhra Pradesh, India

The intricacy of injection molding allows producing a wide range of complex parts makes easier for creating different components. Injection pressure, velocity, temperature are few controlling parameters in the manufacturing of a part [2].

Problems encountered must be rectified in the design phase itself. The successful development of any part depends upon cost and profitability before the design is started. Little cost overheads per part can be compounded to very high during the lifetime of the product. Major cost involved aspects are tools, material, finishing, and grinding [3].

The die having parts are upper half, lower half, ejecting mechanism, gating systems, and vents. The plastic material used is polypropylene commonly for creating a safe holder and cam. For fast filling of the cavity, the gate is cut in such a way that it fills the entire mold in very little time. It eliminates the large time heating of plastic material. The safe holder mostly used safely guarding the small thickness cards [4].

Firstly the plastic granules are heated in heater which converts up to liquid molten state then it is fed into the die cavity through gate provided from the hopper then complete filling of the mold cavity taken place after it is allowed for cooling some time at the end final product in the shape of the cavity created in the mold by separating the die from ejection mechanism [5].

The analysis of die includes giving the initial values temperature, velocity, pressure after this solution initialization is performed for representing the variations along the walls of the mold in results for better understanding behavior of plastic flows into the mold [6].

II. LITERATURE REVIEW

[1] Mr. Kiran C. Mahale et al. According to his paper, Mold Design forms the basis of the development work required for producing the desired number of units in a given time frame. The simplicity of the mold is the key to ensure the quality of the component produced and the associated costs of development. Small cost overheads per part can be compounded to large cost differences over the life span of the part. [11] Mohit Milind Sardare et al. According to his paper, the plastic injection molding process is a cyclic process with four primary steps. These are filling, packing, cooling and ejection. The filling step begins with resin feeding and appropriate additives from the hopper to the heating/injection system of the molding machine. This is the stage the mold cavity is filled with hot melted polymer at injection temperature. After the cavity is filled, in the "packing stage", the additional polymer melt is packed into the cavity at a higher pressure to compensate the expected shrinkage as the polymer solidifies.

This is followed by the "cooling stage" where the mold is cooled until the part is sufficiently rigid to be ejected. The last step is the "ejection stage". In which the mold is opened and the part is ejected,
after which the mold is closed again to begin the next cycle.
[10] Rizwan Mohd Khan et al. According to his paper, In the past few decades, plastics became the most dominant engineering material for a human being. In daily life, many plastic products were used by people. The most common methods of processing plastics to manufacture plastic parts include Extrusion, Injection molding, Plastic injection molding process, Blow molding, Casting, etc. Among these, perhaps injection molding is the most advisable for local industry-almost every manufacturing industry parts that are injection molded. Articles having complicated shapes and geometries with great dimensional accuracy can be easily produced by the plastic injection molding process.

III. PROBLEM DEFINITION

By using the traditional processes in manufacturing, the time required for making parts becomes very difficult, labor cost is more and dimensional characteristics are not good. Due to these drawbacks, we utilize the advanced and efficient method injection molding for creating similar parts in large numbers with greater dimensional accuracy. The demand for plastic products also very high because of the increasing population across the world. The main reason for this demand is its unique characteristics.

IV. PHASES OF THE PROJECT

- Designing the 3D dies from 2D drawing having a cavity of SAFE HOLDER&CAM
- Analysis of the dies using Ansys15.0 software
- Calculations of the die in the manufacturing

V. DESIGN OF DIES

This is the process of creating a model in the shape of the product to be manufactured. For designing die, CatiaV5 software is utilized. Dies are mostly used in manufacturing industries for mass production which involves making similar components having greater precision. In this paper, two types of dies are a safe holder and cam designed. The below-stated steps are followed for modeling the die:

- Line diagrams are created for safe holder and cam by using CATIA v5 software
- Dimensioning of the created line diagram
- Creating the 2D surface for the line diagram
- Trimming of unwanted material from the surface
- Developing the projections for the component
- Creating a rectangular block for a cavity to be produced
- Making the rectangular block as two half's
- Gate Preparation for the fluid flow

A. SAFE HOLDER

The safe holder is molded using CatiaV5 software which is having a rectangular cross-section of dimensions 7cm length, 12cm height, and 2cm thickness. Other details die material mild steel, the plastic polymer is polypropylene which is having 1.5 shrinkages, and a single cavity injection mold.

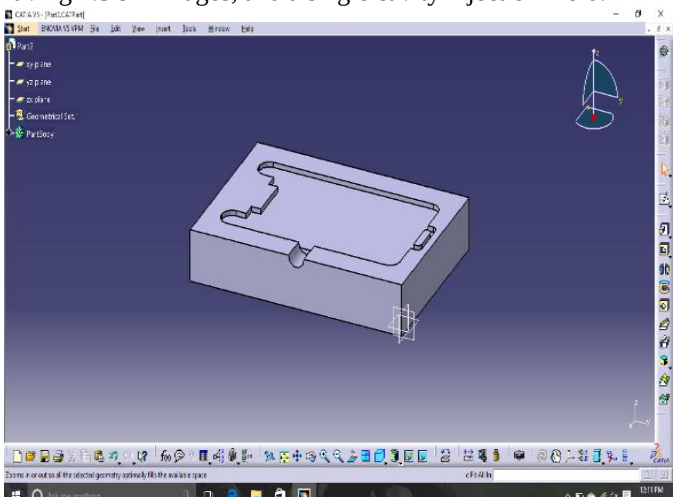

Fig 1: Die having safe holder cavity lower half

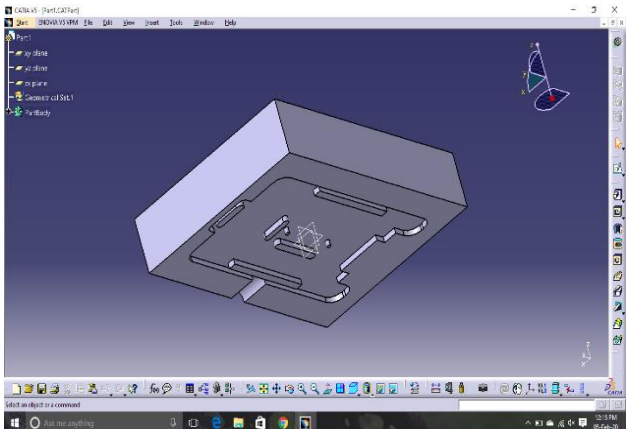

Fig 2: Die having safe holder cavity upper half

B. CAM

Cam is molded using CatiaV5 software which is having a rectangular structure of dimensions 7cm length, 12cm width, and 2cm thickness. Other details are similar to the safe holder properties previously mentioned.

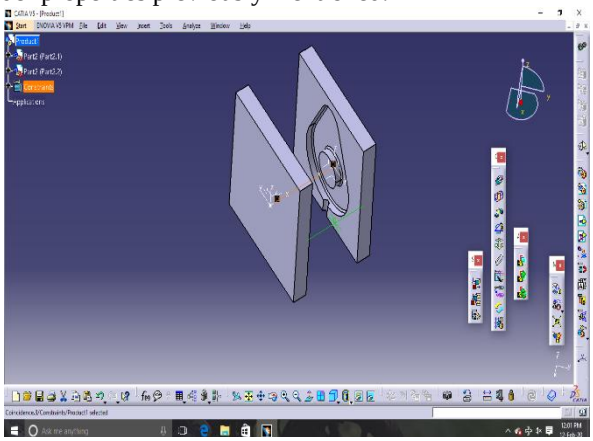

Fig 3: Die having a cavity of cam upper half

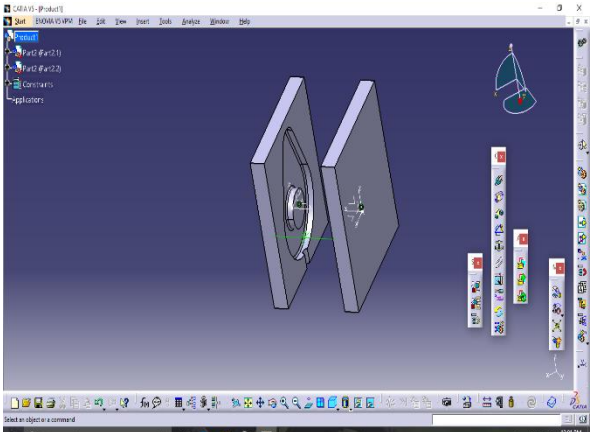

Fig 4: Die having a cavity of cam lower half

VI. PROPERTIES OF POLYPROPYLENE

Table 1: PP Material properties

Material property	Values
Density(kg/m^3)	905
Maximum operating temperature (°C)	230
Thermal conductivity (w/mk)	0.20
Tensile strength (MN/m^2)	33
Flexural modulus (GN/m^2)	1.5
% of elongation at break	150
Melting point temperature	175
% of shrinkage	1.5

VII. PROPERTIES OF MILD STEEL

Table 2: Mild steel Properties

Mechanical properties	Values (metric)
Brinell Hardness	121
Ultimate tensile strength (Mpa)	420
Yield tensile strength (Mpa)	350
Modulus of elasticity (GPa)	200
Poisson's Ratio	0.25
Thermal conductivity (W/MK)	44-52
Specific Heat capacity (J/g°C)	0.47
Machinability	65%

VIII. ANALYSIS OF DIES WITH RESULTS

The analysis is the method used to know the actual behavior of the model created in the design. In this project, Ansys15.0 fluid flow (Fluent) tool is used with help to calculate the streamline velocity, temperature, pressure for the propylene(c3h6) polymer for polypropylene as fluid and steel as solid. In the analysis, the initial temperature is 230°C and velocity 15m/s and 40 iterations are performed. The properties of polypropylene and mild steel are given in Table 1, Table 2. The below procedure to be followed to analyze the dies.

- Importing the geometry file into the fluid flow (Fluent)
- Rename the named section as an inlet by selecting a passage of die by face command and generated
- Generate the mesh for the geometry file having nodes and elements as fine
- Opened the setup window
- Clicked on general set the units
- Created the materials above stated
- Selected the inlet feature for boundary condition
- The required fields were given under boundary conditions
- Started the hybrid initialization by selecting initialization
- Run the calculations with several iterations to be performed.
- Results were seen with required options that are temperature, pressure and streamline velocity

A. ANALYSIS OF SAFE HOLDER

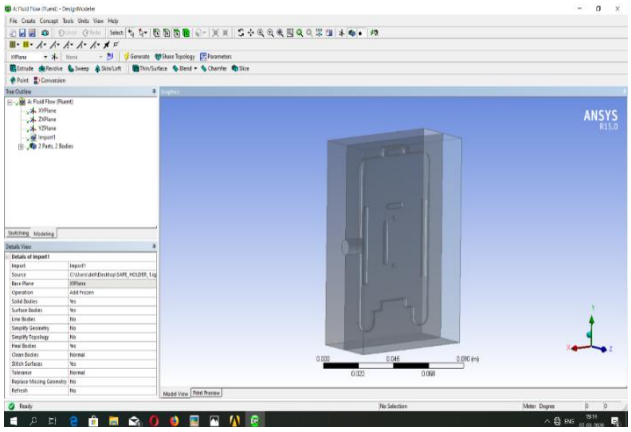

Fig 5: Importing the geometry file

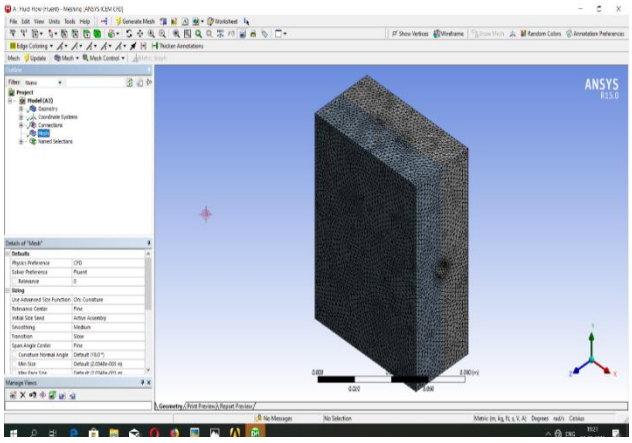

Fig 6: Meshing of die having a safe holder cavity

Fig 6: Represents developing the mesh with relevance as fine and statistical data having nodes and elements are 61215 and 316771 respectively.

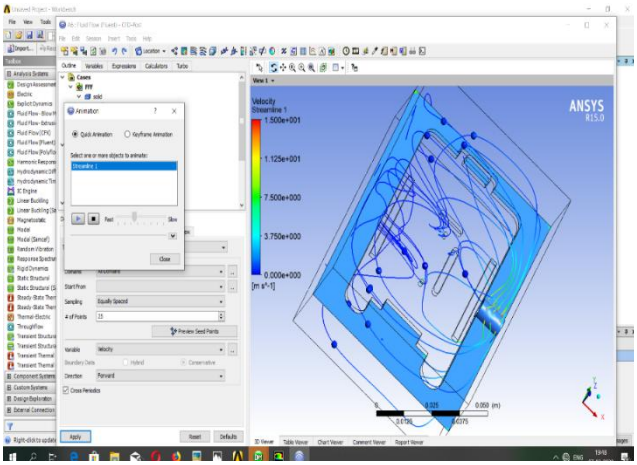

Fig 7: Streamline velocity variation of fluid

Fig 7: Represents the flow pattern for fluid entering into a mold cavity which follows streamline velocity characteristics. Streamline is the line it gives a velocity of fluid particles by drawing tangent along that line.

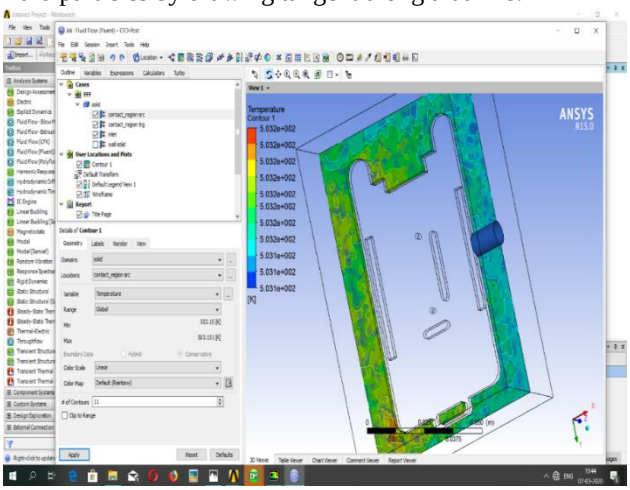

Fig 8: Temperature distribution across the cavity

Fig 8: Represents the temperature distribution along the die wall with 230℃ as the molten material temperature at the inlet. The color red indicated maximum and blue are minimum temperatures.

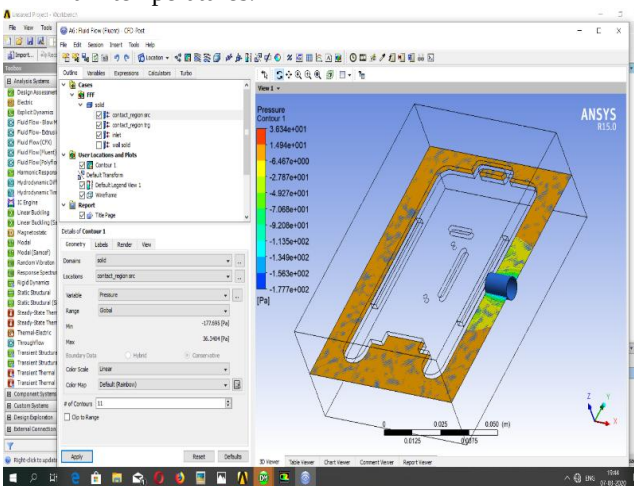

Fig 9: Pressure variation during the flow

B. ANALYSIS OF CAM

The procedure followed for analysis of cam similar to the safe holder

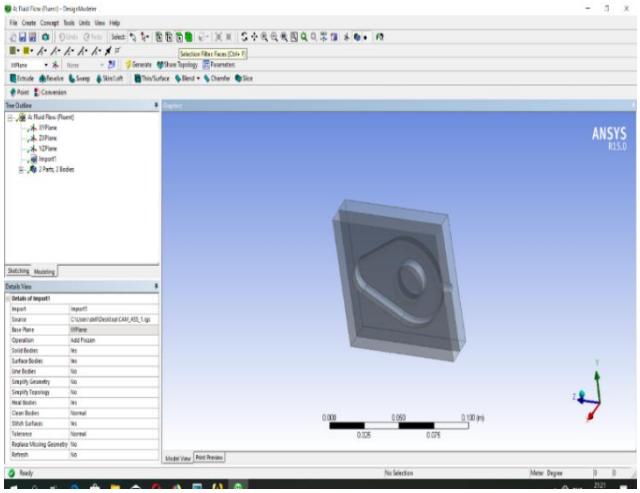

Fig 10: Importing of the geometry file

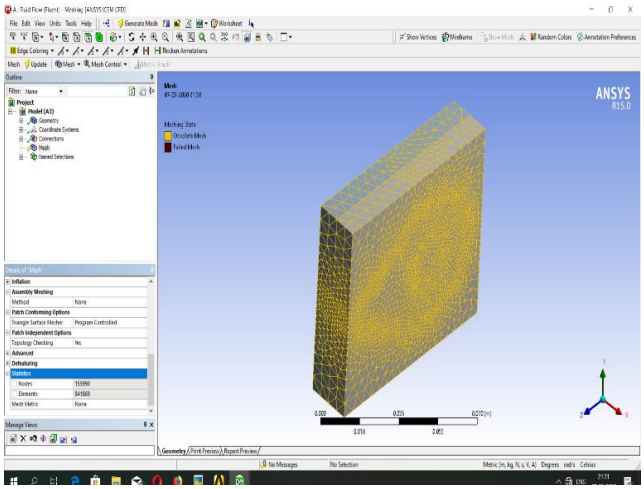

Fig 11: Meshing of a die having cam cavity

Fig 11: Represents developing the mesh with relevance as fine and statistical data having nodes and elements are 15590 and 841869 respectively.

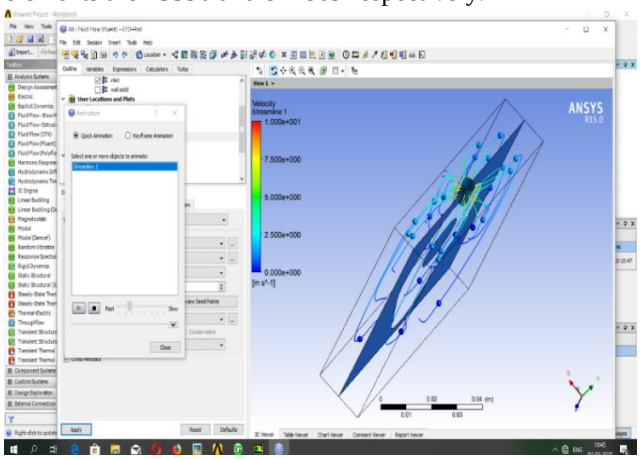

Fig 12: Streamline velocity variation of fluid

Fig 12: represents similar to the safe holder stated procedure in Fig 7.

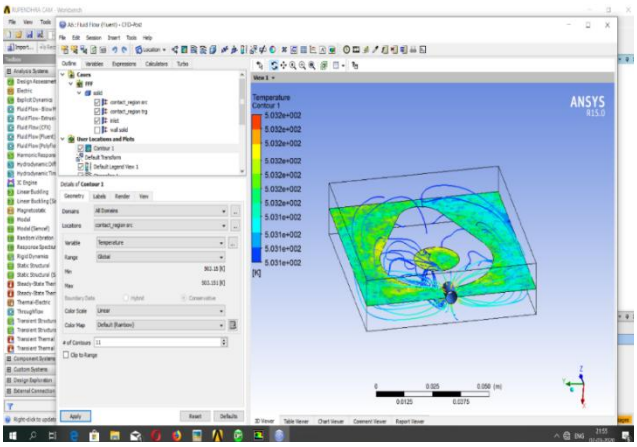

Fig 13: Temperature distribution along the cavity

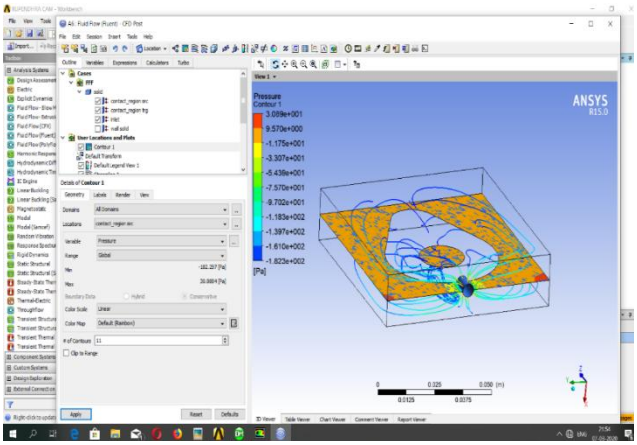

Fig 14: Pressure variation of the fluid

IX. EXPERIMENTAL CALCULATIONS

In this step convective heat transfer rate, cooling time, volume of the cavity for safe holder and cam were calculated. All dimensions are in mm.

X. SAFE HOLDER CALCULATION

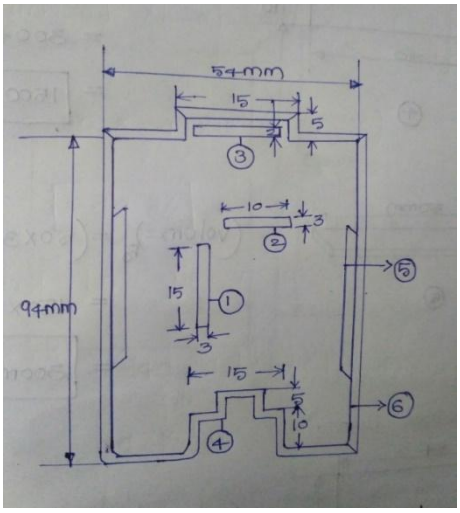

Fig 15: Block diagram of the safe holder

A. VOLUME OF CAVITY

V_1 $=l*b*h$
$=15*3*4$
$=180mm^3$

V_2 $=l*b*h$
$=10*30*4$
$=120mm^3$

V_3 $=l_1*b_1*h_1 - l_2*b_2*h_2$
$=15*5*4 -10*2*4$
$= 300-80mm^3$

V_4 $=l_1*b_1*h_1 + l_2*b_2*h_2$
$=15*5*4+30*10*4$
$=1500mm^3$

V_5 $= l*b*h$
$=50*3*4*2$
$=300mm^3$

V_6 $=l*b*h$
$=92*54*4$
$=19872mm^3$

The total volume of the cavity

$= V_3+ V_5+ V_6- V_1- V_2- V_4$
$=19872+300+220-180-120- 1500$
$=18592mm^3$.

B. HEAT TRANSFER RATE

Length of safe holder die	=7cm
Thickness of die	=2cm
Width of die	=12cm
Convective heat transfers co-efficient	$=50w/m^2k$
Surface area	$=244*10^{-4}m^2$
Surface temperature of die	=230°C
Ambient temperature	= 30 °C

Q_c $=hA (t_\propto - t_a)$
$=50*244*10^{-4}* (230-30)$
$=244w$

Where,

Q_c =Convective heat transfer rate, watt
h =Convective heat transfers co-efficient, w/m^2k
A =Surface area, m^2
$t_\propto$ =Surface temperature of die, °C
t_a =Ambient temperature, °C

C. COOLING TIME

T_c $=S/\pi^2. \propto *\ln [8/ \pi^2* (\theta_r - \theta_m)/ (\theta_e - \theta_m)]$
$=10/ \pi^2*0.0827*\ln [8/ \pi^2* (230-50)/ (90-50)]$
$=15.85sec.$

Where,

T_c =Time elapsed for cooling, sec
S =Wall thickness of mold product, =10mm
$\propto$ =Heat diffusion coefficient, $=0.0827\ mm^2/sec$
θ_r =Temperature of molten plastic, =230°C
θ_e =Ejection temperature of the mold, =90°C
θ_m =Surface temperature of a cavity, =50°C

XI. CALCULATIONS OF CAM

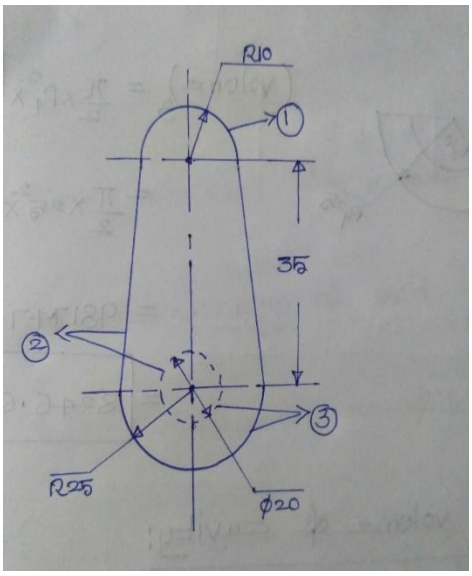

Fig 16: Block diagram of cam

A. VOLUME OF CAVITY

V_1 $=1/2\pi*r^2*h$
$=1/2\pi*10^2*10$
$=1570.79mm^3$

IX

V_2 $=1/2\ (a+b)\ *h*t - 1/2\pi r^2h$
$=1/2(50+20)\ *35*10-(1/2\pi*10^2*10)$
$=12250-1570.79$
$=10679.21mm^3$

V_3 $=\pi/2*r_1^2*h- \pi/2*r_2^2*h$
$= \pi/2*25^2*10- \pi/2*10^2*10$
$=9817.47-1570.79$
$=8246.68mm^3$

Total volume of cavity
$= V_{1+} V_2 + V_3$
$=1570.79+10679.21+8246.68$
$=20496.68mm^3$

B. HEAT TRANSFER RATE

Length of safe holder die =7cm
Thickness of die =2cm
Width of die =9cm
Convective heat transfers co-efficient=$50w/m^2k$
Surface area $=190*10^{-4}m^2$
Surface temperature of die =230°C
Ambient temperature = 30 °C

Q_c $=hA\ (t_\propto - t_a)$
$=50*190*10^{-4}*\ (230-30)$
$=190w.$

Where,
Q_c =Convective heat transfer rate, watt
h =Convective heat transfers co-efficient, w/m^2k
A =Surface area, m^2
$t_\propto$ =Surface temperature of the die, °C
t_a =Ambient temperature, °C

C. COOLING TIME

T_c $=S/\pi^2.\ \propto *\ln\ [8/\ \pi^2*\ (\theta_r - \theta_m)/\ (\theta_e - \theta_m)]$
$=10/\ \pi^2*0.0827*\ln\ [8/\ \pi^2*\ (230-50)/\ (90-50)]$
$=15.85sec.$

Where,
T_c=Time elapsed for cooling, sec
S=Wall thickness of mold product, =10mm
$\propto$=Heat diffusion coefficient, $=0.0827\ mm^2/sec$
θ_r=Temperature of molten plastic, =230°C
θ_e=Ejection temperature of the mold, =90°C
θ_m=Surface temperature of a cavity, =50°C

Table 3: Experimental values for two dies

Parameter	Safe holder	Cam
Volume of cavity (mm^3)	18592	20496.68
Rate of heat transfer (J/s) or (W)	244	190
Cooling time (sec)	15.85	15.85

XII. MANUFACTURING OF DIES

Manufacturing of safe holder and cam are end process for this project. Advanced machinery such as CNC lathe machines is used to make the cavity in dies. After manufacturing, the dies appear as shown below.

Fig 17: Making of cam cavity in die upper half with Ejector pins

Fig 18: Making of cam cavity in die lower half

Fig 19: Die having cavity of safe holder upper half

Fig 20: Die for safe holder lower half

XIII. COMPARISION OF ANALYSIS RESULTS WITH PHYSICAL RESULTS

Table 4: comparison of final results

Parameter	Analysis Results	Physical Results
Dimensions of dies (mm): 1. Safe Holder 2. Cam	1.70X120X4 2. 70X90X4	1.70X120X4 2. 70X90X4
Initial temperature (℃)	230	230
Cycle time (sec)	28	28
Injection pressure (Mpa)	100	90-110
Velocity (m/s)	15	15-50

XIV. CONCLUSION

- Design and analysis software play a very important role in this project for 2D drawings converted into 3D models and evaluation of the information referred to the die.
- The plastic material used polypropylene widely employed for creating parts through injection molding. Several techniques being explored to find the best method for cavity production.
- In this die material used as steel, it has 350Mpa tensile strength which is more strength compared to aluminum.
- In the analysis depending on the inlet sections given die characteristics may change.
- The melting temperature of plastic granules is 230℃ which indicates the polypropylene materials have very low temperatures. It involves low costs for the melting of materials. Injection velocity for the inlet of the gate is 15m/s it can be increased up to 50m/s.
- This project was very useful in knowing the fluid characteristic behavior subjected to flowing inside the mold and also observed the variation of graphs with respect given values at each stage.

REFERENCES

1. Mr. Kiran C. Mahlae, Prof. Avinash. V. Patil, "Design Enhancement for A Plastic Injection Mold for An Automotive Component Using Results of Simulation for Input", Volume 3, Issue 4, May 2013, ISSN-2250-1991, pp 80-82.
2. Nik Mizamzul Mehat, Shahrul Kamaruddin, Abdul Rahim Othman, "Modeling and Analysis of Injection Molding Process Parameters for Plastic Gear Industry Application", Volume 2013, Article ID 869736, May 2013, pp 1-10.
3. Sri. P V S M Varma and Sri. P N E Naveen, "Optimizing
4. Injection Molding Tool Cost by Using Virtual Software Techniques" International Journal of Mechanical Engineering & Technology (IJMET), Volume 4, Issue 6, 2013, ISSN (Print) 0976 – 6340, ISSN (Online) 0976 – 6359, pp 227-240,
5. Haribabu Kummara, Dr. G. Harinath Gowd, "Design and Fabrication of Plastic Injection Molding Tool for Pump Gaskets", Volume 1, Issue 3, August 2014, ISSN 2349-6495, pp 38-45.
6. Jitendra Dilip Ganeshkar, Prof. R.B Patil, Swapnil S. Kulkarni, "Design of Plastic Injection Mold' For An Automotive Component Through Flow Analysis (CAE) For Design Enhancement", E-ISSN2249-8974, Jan-March 2014, pp 157-159.
7. B. Iftekhar Hussain, Mir Safiulla, Mohamed Ali, G. Suresh, "Injection Mould Tool Design of Power Box Side Panel", Volume 3, Issue 2, February 2014, ISSN: 2319-8753, pp 9695-9701.
8. Parag G. Chavhan, Prof. B.R. Borkar, "Review on Injection Molding Process & its Die Development Using CAD/CAM/CAE", Volume 5, Issue 1, January 2015, ISSN: 2278-621X, pp 329-332.
9. Manmit Salunke, Rushikesh Kate, Vishwas Lomate, Gajanan Sopal, "Injection Molding Methods Design, Optimisation, Simulation of Plastic Toy Building Block By Mold Flow Analysis", Volume 6, Issue 6, June 2015, ISSN 0976 – 6340 (Print), ISSN 0976 – 6359 (Online), pp 33-42.
10. Jithin k, Kannakumar k, "Process Parameter Optimization of Injection Mold Using Concurrent Approach", Volume 3, Issue 12, December 2016, ISSN (Online) 2348-7968, pp 1-3.
11. Rizwan Mohd Khan, Gaurav Acharya, "Plastic Injection Molding Process and Its Aspects for Quality: A Review", Volume 3, Issue 4, 2016, ISSN: 2394 - 658X, pp 66-70.
12. Mohit Milind Sardare, Vaibhav Bankar, "Design Family Mold Tool for Plastic Box", Volume 2, Issue 4, May-June 2018 ISSN 2456-6570, pp 1209-1212.

13. Nitish Kumar Mishra, Professor Vaibhav Bankar, "Analysis of Ceiling Cable Holder Base", Volume 6, Issue 5, May 2019, e-ISSN: 2395-0056, p-ISSN: 2395-0072, pp 7071-7074.

AUTHORS PROFILE

Mr. B. Jogarao, is Associate Professor in Mechanical Engineering Department at Godavari Institute of Engineering & Technology (A), Rajahmundry. He completed his Post Graduation from National Institute of Technology, Tiruchirappalli, Tamilnadu in the year of July 2010. He has 9.7 Years Teaching Experience. He has 15 publications in his research. He got Life membership in Indian Society for Technical Education in 2015. He has been awarded Associate in 2015 and Ratified by Jawaharlal Nehru Technological University, Kakinada. He has been acting as a member in Board of Studies and participating actively in several working areas for department growth.

Mr. CH. Rupendra, pursuing bachelor of technology in mechanical engineering in GIET(A), Rajahmundry, A.P, India. Completed diploma in mechanical engineering in M.B.T.S Govt Polytechnic, Nallapadu, Guntur, 522005, A.P.

Mr. D. Vivek, Pursuing bachelor of technology in Mechanical engineering, GIET(A), Rajahmundry, A.P, India. Completed diploma in mechanical engineering in C.R Reddy Polytechnic, Eluru, West Godavari, 533047, A.P.

Mr. D. Yuva Sai, pursuing bachelor of technology in mechanical engineering in GIET(A), Rajahmundry, A.P, India. Completed diploma in mechanical engineering in Col.D. S Raju Polytechnic, Poduru, 534327, A.P.

Mr. B. Sudhakar Raju, pursuing bachelor of technology in mechanical engineering in GIET(A), Rajahmundry, A.P, India. Completed 12th in Sri Chaitanya Kalasala, VL Puram, Rajahmundry, 533101, A.P.