International Journal of Recent Technology and Engineering (IJRTE)
ISSN: 2277-3878 (Online), Volume-8 Issue-6, March 2020

Analysis of Impact of Laser Linewidth and Chromatic Dispersion on Carrier to Noise Ratio in Radio over Fiber

Rajesh

Abstract*: Radio over Fiber is a powerful technology to cater the today's demands of the customer regarding coverage and capacity. The behaviour and performance of the RoF link is analyzed with MZM external modulator by transmitting ASK data in downlink with the simulation set up on OptiSystem. The impact of chromatic dispersion and laser phase noise due to RF oscillator on Carrier to Noise Ratio (CNR) in radio over fiber systems is studied. The CNR penalty of 3-4 dB is observed for the variation of 10 to 1000MHz Line width of the laser.

***Keywords*: IM-DD, ODSB, OSSB, CNR, 64 QAM, 8DPSK**

I. INTRODUCTION

For the voice, data, and multimedia services, the volume of data traffic is consistently increasing due to the huge demands of bandwidths by subscribers. The flexible and cost-effective access network is desired to provide very high data rates at every place for all time. In both types of communication, it may be wired or wireless, the huge amount of bandwidth is essential to gratify the demand. Now a day, Radio-over-fiber (RoF) technique is used extensively for broadband services because an optical fiber as a transmission medium has various advantageous like low loss and large bandwidth, lightweight, small size, low cable cost and easy access etc [1-3]. In these RoF systems, a radio frequency (RF) modulated optical signal transmitted to a remotely placed base stations (BS) by a media of optical fiber before being radiated through the air. The RF signal is retrieved at a base station by using a photodetector (PD) [4].

An optical link of our interest from the Central Office (CO) to the Base Station (BS) as shown in Figure 1 is analyzed in depth [5]. Using an MZM modulator and a phase shifter generates an OSSB signal. Local oscillator generated RF signals are divided by a power splitter and 90° phase shifter. The RF signal is modulated optically by a combination of LD and MZM modulator, then it is transmitted through an optical fiber to the Photodetector (PD) and the corresponding photocurrent to the RF signal is filtered by the Band-Pass Filter (BPF).

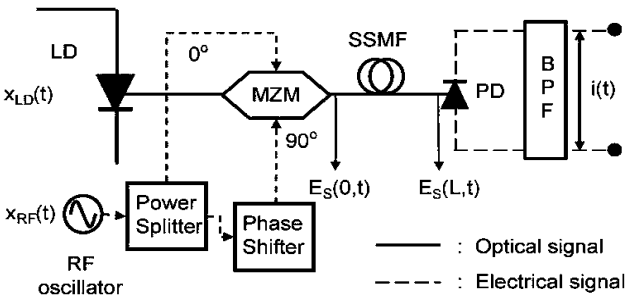

Fig. 1. Schematic of an optical ROF system

Where *V*RF define amplitudes of RF signal and ω_{RF} define the angular frequency of the signals. The output signal of the light source laser is given by:

$$x_{LD}(t) = A.\exp j\left(\omega_{LD}t + \phi_{LD}(t)\right) \qquad (2)$$

Where *A* define amplitudes of the optical signal from the LD and, ω_{LD} define the angular frequency of the signal.

After optically modulating an electrical signal with a DE MZM, the output signal of the modulator is given by equation (3):

$$E(0,t) = \frac{L_{MZM}.x_{LD}(t)}{\sqrt{2}}\left\{\exp j\left[\gamma\pi + \frac{\pi}{V_\pi}.\frac{x_{RF}(t)}{\sqrt{2}}\right] + \exp j\left[\frac{\pi}{V_\pi}.\frac{\tilde{x}_{RF}(t)}{\sqrt{2}}\right]\right\} \qquad (3)$$

Where:

Normalized DC (γ) = *V*dc/*V*π,

Normalized AC (α) = *V*RF/$\sqrt{2}$*V*π),

Vπ is the modulator's switching voltage. *L*MZM is DE MZM's insertion loss and θ is the phase shift providing by the phase shifter.

CNR penalty analysis of ROF systems

Carrier-to-Noise Ratio (CNR) is a very prominent parameter for evaluation of the ROF system because it is defined as the ratio of the carrier power to the noise power which measures system performance. Autocorrelation function and Power Spectral Density (PSD) function are two important and widely used methods to evaluate CNR [5-6]. The ratio of the CNR to the reference CNR is known as CNR penalty and it analyzes the effect of laser phase noise and linewidth of RF oscillator generated electrical signal.

Manuscript received on February 10, 2020.
Revised Manuscript received on February 20, 2020.
Manuscript published on March 30, 2020.
* Correspondence Author
Rajesh*, Project Manager, Haryana State Electronics Development Corporation (HARTRON), Panchkula-134109, Haryana, India, Email-goelrajesh17@gmail.com

Normally, the difference exists between the real CNR and derived CNR so that the CNR penalties, as well as the CNR, both are equally important for the real system. The CNR penalty can also depict the impact of the specific parameters on the system performance as these parameters are variable in nature.

The CNR penalty which is induced due to the differential delay provided by fiber chromatic dispersion and the laser phase noise provided by variable line widths of the laser and the RF oscillator is given by equation (4):

$$CNR = \frac{CarrierPower}{NoisePower} \tag{4}$$

$$= \frac{P_1}{2B_{RF}.\frac{N_0}{2}} \tag{5}$$

$$= \frac{2\Re^2 A_1^4 \alpha_1^2 p}{N_0 \frac{\gamma RF}{\pi} \tan\left(\frac{\pi}{2} p.e^{2\gamma_t \tau_1}\right)} \tag{6}$$

The impact of line widths, differential delay and types of filter used on CNR is analyzed. If CNR_0 is a reference CNR, the CNR penalty ΔCNR is given by equation (7):

$$\Delta CNR = 10\log_{10}\left(\frac{CNR_0}{CNR}\right) \tag{7}$$

$$= 10\log_{10}\left(\frac{p_0.\gamma_{RF} \tan\left(\pi p.\frac{e^{2\gamma_t \tau_1}}{2}\right)}{\left(p.\gamma_{RF_0} \tan\left(\pi p_0.\frac{e^{\gamma_{RF_0}\tau_1}}{2}\right)\right)}\right) \tag{8}$$

Where, Po is the % of received power.

II. RESULT AND DISCUSSION

A. System Set up for RF generation by IM-DD

The easiest and cost-effective technique to deliver the RF signal to remotely placed base stations optically is Intensity Modulation/ Direct Detection (IM/DD) technique. In this technique, the intensity of the light source modulated directly with the RF signal itself and photodetector is used for direct detection of the RF signal [7-10]. Two different techniques can be used to modulate the light source. Either RF signal is used to drive the laser bias current to modulate the optical signal directly [11] or an external modulator such as the MZM or EA are used to modulate the intensity of the light [12].

The system set up to analyze this technique is shown in figure 2. The external modulation technique is used to modulate the data. The CW laser wavelength and input power have been 1550 nm and 0dbm respectively. The photodiode responsivity has been set to 0.9A/W. The Bessel type band-pass filter is used to recover the carrier.

The impact of laser linewidth on the CNR of the system is verified. It has been observed that CNR decreases by increasing the laser line width.

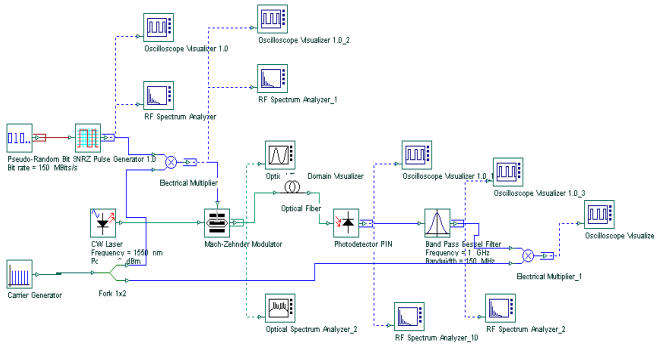

Fig. 2. System set up of IM-DD ROF Link

Due to the increment in the laser line width from 10 MHz to 1000 MHz, the CNR penalty is almost 3 dB for the transmission distance of 2 Km and is 4 dB for the distance of 10 Km as shown in Figure 3. But, CNR for the distance of 30 Km is 54 dB, that is too low as compared to 62 dB for the distance of 10 Km and 65 dB for the distance of 2 Km as theoretically expected. An interesting thing observed here is that CNR is stable in linewidth range from 10 MHz to 1000 MHz, the possible reasons may be further investigated.

The results are matched with the theoretical prediction as discussed in the previous section.

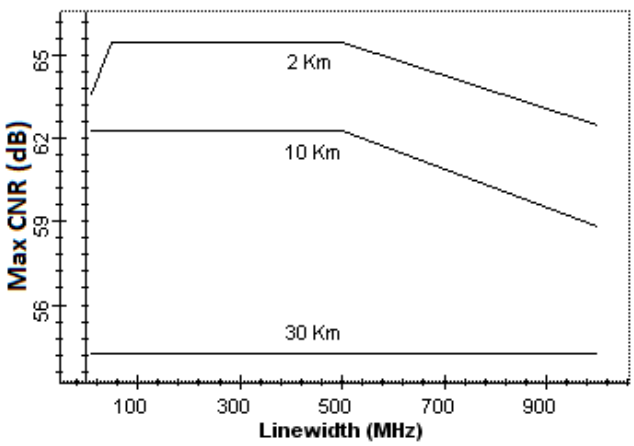

Fig. 3. The impact of laser linewidth on SNR with different distances

B. ASK Data Transmission

To generate Amplitude Shift Keying (ASK) or On-Off Keying (OOK) modulated microwave carrier, base-band data has been used to drive the MZM modulator. The amplitude and bias have been adjusted so as to produce an electrical signal with a sufficient modulation depth at the photodiode. The PRBS generator has been used to obtain the ASK modulation. The data rate of the PRBS set to 150 Mbps. The PRBS data has been given to the NRZ pulse generator to obtain the NRZ sequences at the rate of 150 Mbps. The signal leaving the MZM is intensity-modulated, confirmed by the generated electrical signal at the photodetector. The laser wavelength is set to 1550nm with 0 dbm power and the line width is 10 MHz. The system set up for the transmission of the ASK data has been used as shown in Figure 2.

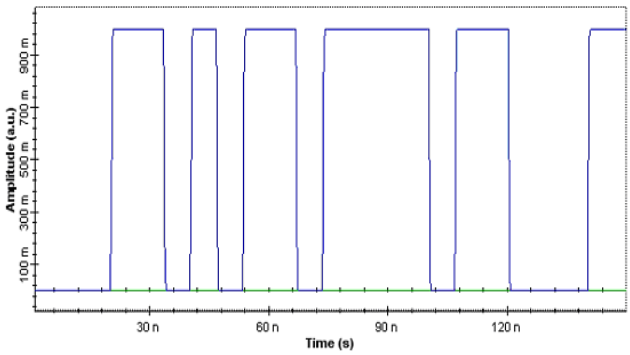

Fig. 4. The NRZ pattern of the 150 Mbps data generated by PRBS generator

Figure 4 shows the NRZ pattern of the 150 Mbps data generated by the PRBS generator. To compare the results obtained at various output points, the time scale of the oscilloscope is set from 1 ns to 150 ns. Figure 5(a) shows the ASK modulated data on the 1 GHz carrier. It shows the 100% modulation i.e. On-Off keying data. The spectrum of the ASK modulated data is shown in Figure 5(b). The MZM output shows that data is modulated on the optical carrier with double sideband as shown in Figure 5(c) and the output of the MZM in the time domain is just a replica of the output of ASK modulator as shown in Figure 5(d).

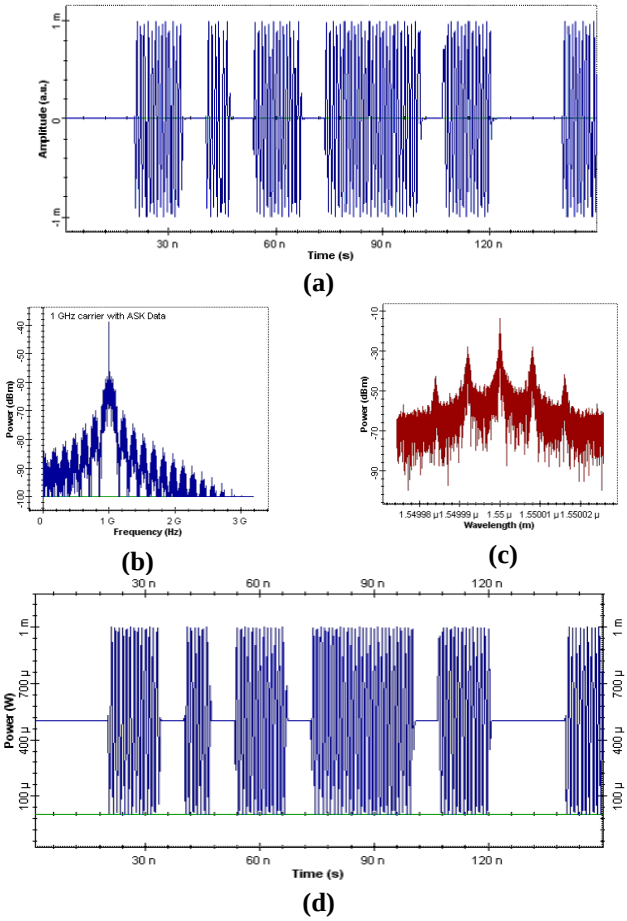

Fig. 5. (a) ASK modulator output (b) ASK output spectrum (c) MZM modulator spectrum (d) MZM modulator OTDR output

At remote antenna Unit (RAU), the PIN photodiode is used with the responsivity of 1A/W. The output of the photodetector shows the recovery of the ASK data from the optical carrier as shown in Figure 6(a), however, the amplitude of the pulses is reduced. The spectrum at the output of detector clearly shows the I GHz carrier that having ASK data as shown in Figure 6(b).

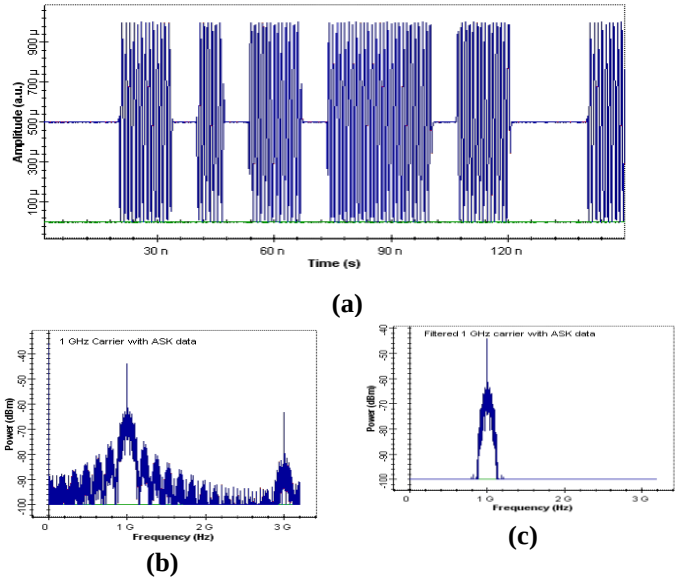

Fig. 6. ASK data at Filter output

The electrical signal is filtered using wideband BPFs centered on 1 GHz as shown in figure 6(c). To recover the transmitted data, a coherent detector using a LO operating at the appropriate frequency of 1 GHz is used. The filter output also matches with the transmitted data. The maximum data rate that can be transmitted is determined by the factors such as whether the data is pre-filtered to reduce the roll-off, the kind of data being transmitted (RZ or NRZ), and so on. However, the upper limit of the data rate of the available bandwidth for data transmission is determined by the Carrier signal frequency, the bandwidth of the Mixer and filter.

III. CONCLUSION

The performance of Radio over Fiber link in IM-DD configuration with external modulation has been analyzed. The carrier to noise ratio that is dependent on the laser Line width is analyzed. It is verified that when laser Line width increases then the value of CNR decreases. Due to the increment in the laser Line width from 10 MHz to 1000 MHz, the CNR penalty is almost 3db for the distance of 2km & 4 dB for the distance of 10 km. The ASK Data has been transmitted successfully. It has been observed that the strength of the pulses is attenuated after the transmission, but does not affect the data pattern. It has been also observed that the rise time of the pulses must be one-fourth of the reciprocal of the data rate to increase the spectral roll-off. The data rate has been limited by types of the data to be transmitted, carrier frequency and the system component like photodiode and filter bandwidth.

ACKNOWLEDGMENT

Author is thankful to the Vice-Chancellor, Deenbandhu Chhotu Ram University of Science and Technology, Murthal, Sonepat (India) for providing the facilities of Optisystem.

REFERENCES

1. S. Rajpal and R. Goyal, "A Review on Radio-Over-Fiber Technology Based Integrated (Optical/Wireless) Networks" Journal of Optical Communications, 2017; 38(1): pp 19–25
2. T. Javed and F. Amin, "Radio over Fiber Technology", International Journal of Scientific & Engineering Research, (2016), Volume 7, pp 377-380
3. N. Kumari and P. K. Kaushik, "A REVIEW ON RADIO OVER FIBER TECHNOLOGY" International Journal of Advance Research In Science And Engineering, Vol. No.3, Issue No.2, (2014) pp 167-179
4. A. J. Cooper.,"Fiber/Radio for the provision of Cordless/ mobile telephony services in the Access Network." Eletronics Letter, Vol 26, No. 24, pp 2054-2056
5. C. Tae-Sik, Y. Changho, "Analysis of CNR penalty of ROF system including the effects of phase noise from laser and RF oscillator", Journal of lightwave tech., Vol.23, No.12, 2005 pp 4093-4099
6. S. Kumar, P. K. Kaushik, Shelly Singla and Subodh Bansal, "Carrier to Noise ratio Performance Evaluation for Optical SSB Signal in Radio over Fiber System", International Journal of Electronics Signals and Systems (IJESS), ISSN No. 2231- 5969, Volume-1, Issue-2, 2012
7. F. Istvan., "Radio over fiber : Application , Basic Design and Impact on Resource Management" Google search
8. H. L. Chin, P. Vas, "Enhanced performance of ROF link for Cellular mobile using postdistortion compentation", Google Search, 2005,pp 2772-2776
9. H. R., Twichell J. C., and Cox C., "A Down-Conversion Optical Link with RF Gain", J. Lightwave Technol., vol. 15, no. 6, pp. 956.961, Jun. 1997.
10. K. Ton,"Fiber optic techniques for broadband access network", teletronikk2, 2005, pp 49-65
11. M. Tomas, K. Attiala, "Direct modulated laser in ROF application", Google search, 2002 pp 129-133
12. S. Graham, H., A. Zaheer, "Overcoming Chromatic Dispersion Effects in Fiber-wireless Systems Incorporating External Modulators" in IEEE Transactions on techniques, Vol.45, 8, 1997, pp1410-1415
13. G. H. Smith, D. Nowak, and Z. Ahmed, "Technique for optical SSB generation to overcome dispersion penalties in fiber-radio systems", Electronics Letter, vol. 33, no. 1, 1997, pp74-75.

AUTHORS PROFILE

Rajesh was born on May 4, 1976. He received the M.Tech. (Electronics and Communication Engineering) degree from I.K.G. Punjab Technical University, Jalandhar (India) in 2006 and presently pursuing the PhD degree from I.K.G. Punjab Technical University, Jalandhar (India). Presently, he is working as Project Manager in Haryana State Electronics Development Corporation (HARTRON), Panchkula, Haryana (India). He has around 15 years of experience in the installation, operation and maintenance (IO&M) of Optical Fiber Communication Systems in Bharat Sanchar Nigam Limited (BSNL). His research interests are optical fiber communication and synthesis, characterization and application of polymers, block copolymers, polymer thin films, organic-inorganic composite and nanocomposite materials.