International Journal of Recent Technology and Engineering (IJRTE)
ISSN: 2277-3878 (Online), Volume-8 Issue-6, March 2020

Design and Implementation of Vlsi Architecture for Arrhythmia Detection

J.Lavanya, M.Abirami, I.Merlin, I.Vivek Anand

Abstract: ***Arrhythmia is one in all the foremost well-liked heart diseases that might result in serious consequences. In case of arrhythmia, the heart rate may be either too fast or slow. When a person suffers from arrhythmic the heart may not pump sufficient blood to all body parts that is necessary for circulation. some of the symptoms of arrhythmia includes faintness ,fluttering your chest, a light headedness or dizziness, fainting or near fainting and on the worst it may turn out to be deadly causing ventricular fibrillation. Due to this it is very crutial to detect conditions of arrhythmia. It is very difficult to identify the symptoms of arrhythmia from a long ECG record. This projects presents a VLSI based design of high speed and minimum area for arrhythmia detection .It uses arithmetic distribution discrete wavelet transform for arrhythmia detection of QRS wave and is implemented using CADENCE. The purpose of distributive arithmetic discrete wavelet change is to compress the ECG signal. ECG signals are generated via MATLAB. The resultant of these coefficients are given to the LUT, which comprises of MIT-BIH databases. Our aim is to detect the QRS complex in the ECG signal and to identify the time and frequency variations. By comparing these variations with that of the reference variations produced in the normal ECG waveform it is easy to identify whether the patient is suffering from arrhythmia or not. The coding was written in verilog and stimulated in modelsim software and implemented using CADENCE tool.***

Keywords: — DA-DWT, ECG, FPGA, QRS complex

I. INTRODUCTION

Cardiac arrhythmias area unit a bunch of conditions within which the heartbeat is irregular. delicate arrhythmias have symptoms like light-headedness, shortness of breath, chest pain, or passing out. Some serious arrhythmias could result in strokes, heartdisease orperhaps overtime.

Manuscript received on February 10, 2020.
Revised Manuscript received on February 20, 2020.
Manuscript published on March 30, 2020.
* Correspondence Author
J.Lavanya*, electronics and communication engineering, National engineering collegkovilpatti,tamilnaduEmail:srilavu14@gmail.com
M.Abirami , electronics and communication engineering, National engineeringcollege,kovilpatti,tamilnadu. Email: abiramimurugesan@gmail.com
I.Merlin, electronics and communication engineering, National engineering collegkovilpatti,tamilnaduEmail:merlinisravel@gmail.com
I.Vivek anand , electronics and communication engineering, National engineering collegkovilpatti,tamilnaduEmail:ilangovivek@gmail.com

yet, it's tough to spot heart disease symptoms from a conventional cardiograph (ECG) throughout a routine physical communication or AN communication within the medical linstitution ER thanks to its intermittent prevalence nature.

Therefore, continuous observation of patients' heartbeats in lifestyle is crucial to heart disease detection and designation designation [1] 1 . A number of various strategies for automatic cardiacarrhythmia detection are developed within the past few decades in an endeavor to help with the ECG observation task.Most of the strategies report recognition of cardiovascular disease with an explicit level of accuracy.The paper aims to build a VLSI architecture for arrhythmia detection. This paper proposes associate degree improved and extremely correct technique which will succeed error-free classification once applied to straightforward set of check signals from a web-based electrocardiogram info (MIT/BIH). The graph signal from the MIT-BIH is captured here[2]2. Once the signal has been captured, filtering may be exhausted order to get rid of any unwanted ..noise among the captured signal. Once the signal is empty These variations are subject to a decomposition of four stages victimization the distributive arithmetic DWT which is liable for extracting the most points among the graph signal. once extracting such information embedded among the signal,.i.e the time and frequency information of the waveforms to be compared to the real signal if the measurement conditions of the cardiovascular disease.

This methodology, we'vegot projected aVLSI style for cardi ac arrhythmia detection. The cardiogram signal MIT-BIH data catches signal info.The cardiogram signal is conditioned by DADWT. The essential principle behind this can be to notice the QRS complex within the cardiogram signal. This signal is generated by using Mat laboratory. The QRS complex consists of 3 deflections within the graph waveform[3] 3 The QRS complex reflects the depolarisation of the proper and left ventricles and is that the most outstanding feature of the human graph.By scrutiny the traditional cardiogram signal with the affected person's cardiogram wave form we will notice whether or not the person is suffered from cardiac arrhythmia or not. The simulation results of Matlab area unit shown in figure two

II. PROPOSED METHOD

The outline of the proposed method is shown in

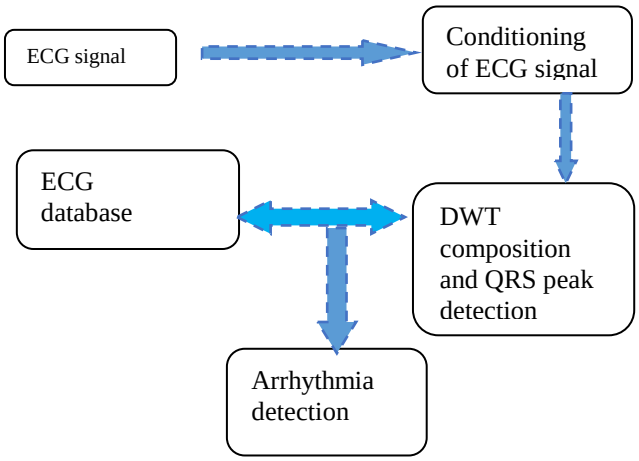

Fig 1: Block diagram for the proposed work

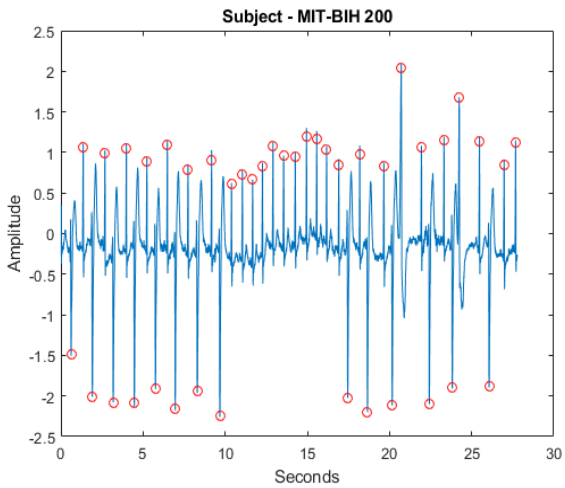

Figure 2. (a) ECG signal captured in MITBIH database

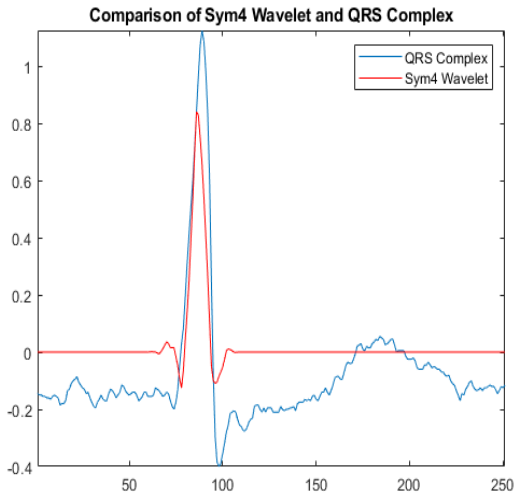

Figure 2. (b) the QRS complex of the ECG signal is compared with symlet 4 wavelet transform.

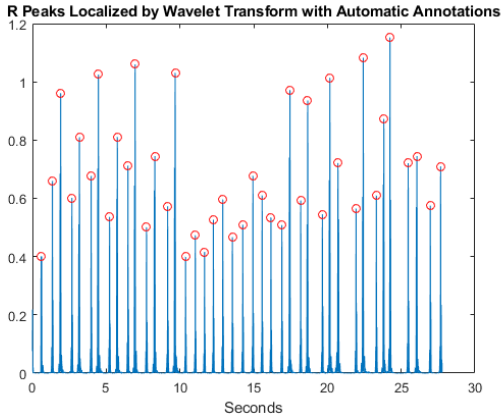

Figure 2. (c) R peaks in the QRS complex is located by using the wavelet transform

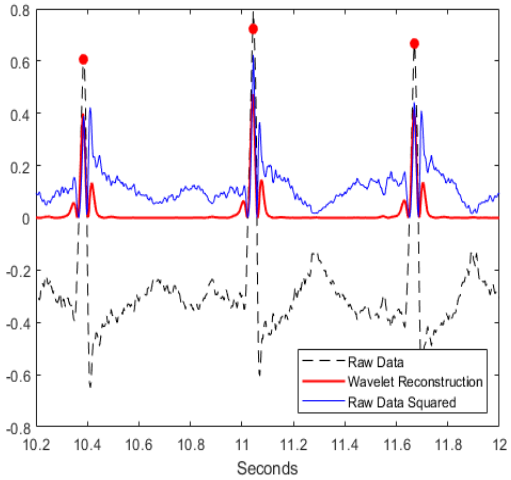

Figure 2. (d) Reconstructed waveform of the graph signal

III. DISTRIBUTIVE ARITHMETIC DISCRETE WAVELET TRANSFORM (DA DWT)

Transformations are custom test acquiring any signal data that can not be derived from the raw signal[4]4. Inside the frequency quality of the signal additional signal data is covered. Doctors usually use graph signals in the time domain to diagnose heart problems. Nevertheless, graphic recorders comparing computers Use frequency data to determine a certain condition of the disease[5]5. Once the frequency content of the graph signal is analysed, such conditions can be simply diagnosed. Since graph signals are not stationary DWT, the most important transforms to be used for extraction of features are the ones. DWT can be used for a large variety of applications such as compression, decomposition,Extraction function, etc. DWT can be a type of algorithmic filtration. Using the mother wavelet the graph signals are decomposed into constant vectors. The coefficients obtained using the four-level decomposition, i.e. approximation coefficients of the fourth level, and thus the specifics of all four levels are used for the graph signal analysis[6]6. The DWT filter was seen on four levels

The four-level DWT filter was shown in figure 3.

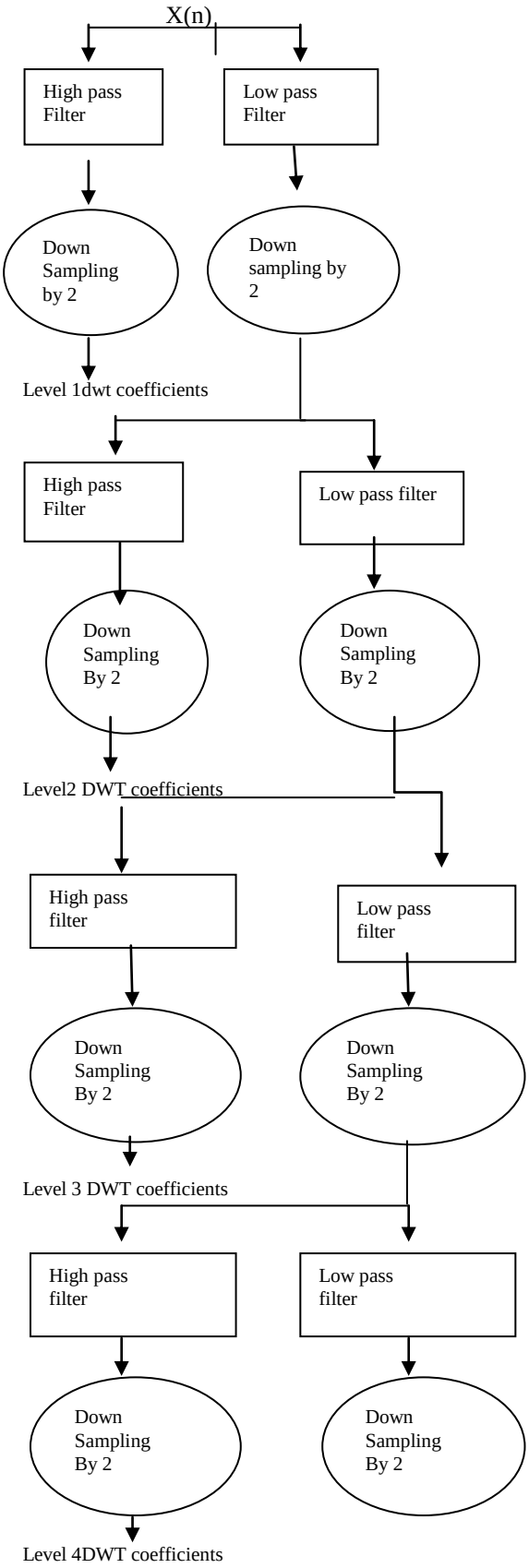

Figure 3: Decomposition of 4 level DWT filter

DWT isemployed for moldering the cardiogram signal so rel evant options necessary willbe extracted. victimisation seque nt The cardiogram signal can be decomposed into various frequency bands by the high pass and low pass filtering [7]7The QRS complex characteristic is the decomposition of operation extracted up to four stages.It is shown in the figure 2 after passing the signal to successive low pass filters,they are sampled.[8]8 The ECG signal resolution is improved by filtering operations and the scale is alsoimproved by up-and down-sampling. .Simulations results for down sampling is shown
in figure 4.The RTL read of down sampling circuit is simulated simulated in CADENCE is shown in figure 5.

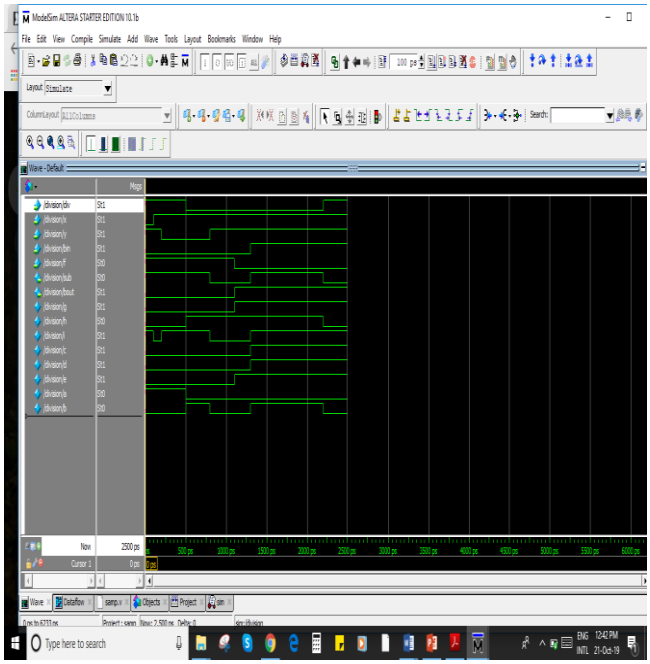

Figure 4: simulation results for downsampling of the ECG signal

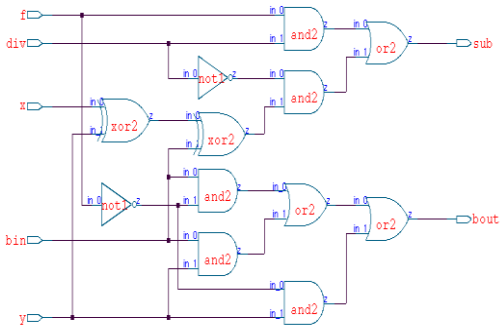

Figure 5: RTL view of down sampling circuit

Distributive arithmetic DWT simplifies the operations under which the conventional DWT operation has been abused. The multiplication operation is normally performed by components of victimization logic such as adders, registers, etc. [9]9. The process of two n bit numbers for multiplication. The key benefit of the DA methood is that it speeds up the multiplication process by precalculating all possible values and keeping them in LUT in ROM.

IV.VLSI ARCHITECTURE

The proposed architecture is (shown in figure 6) consists of a sequence of register changes followed by the lookup table. this LUT could be a memory based solutions that replaces multipliers with tiny places of storage.[10]10. The entries within the LUT ar the pre-computed multiplication results. This technique is faster than the multiplication of the hardware if the ar of LUT holds on to the on-chip memory. Nevertheless, speed can be any hyperbolic by increasing the LUT quantity but in these cases the output should improve.

Inside the lookup table, it consists of multiple multiplexers for computing operations. Sample diagram of multiplexer. The lookup table is followed by a 1-bit scaling accumulator. A scaling accumulator uses the iterative shift-add routine to multiply. One input is displayed in a bit-parallel form, the other in a bit-serial form. Increasing bit in the serial input multiplies the parallel input by either 0 or 1. The output from each bit is added to an cumulative number.

.

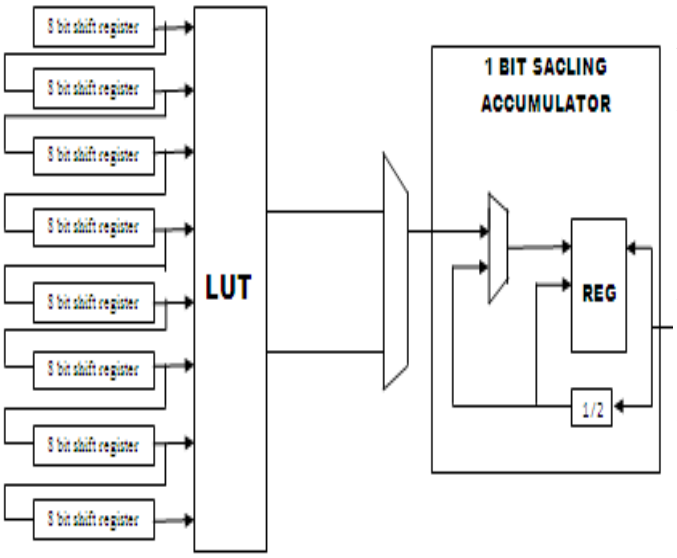

Figure 6: VLSI architecture using distributive arithmetic discrete wavelet transform.

The simulations were done using ModelSim software. The results are shown in figure 6.

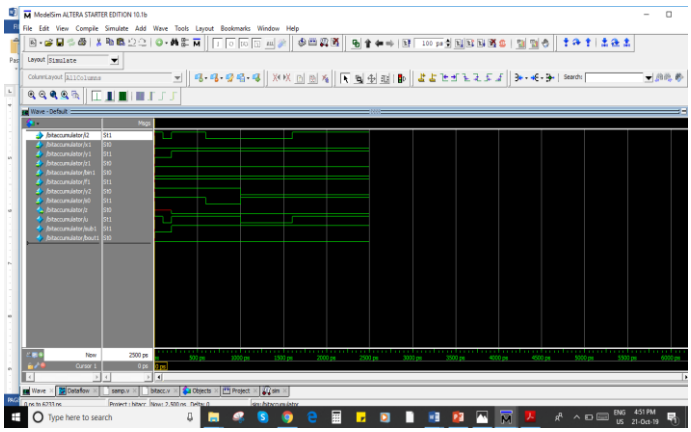

Figure 7: Output waveform for the VLSI architecture.

The vlsi architecture is simulated using cadence is shown in figure 8

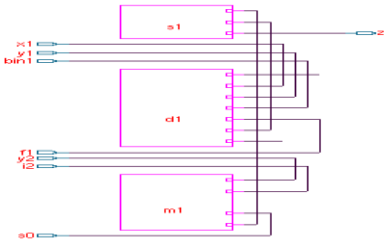

Figure 8: Simulation results of VLSI architecture

V. CONCLUSION

The main aim of this project is the development of high performance ECG signal analysis system . The discrete wavelet transform obtained exhibits better performance in feature extraction of QRS complex detection. Wavelet transforms approximation coefficients improves frequency and reduces noise using adaptive filter. A separate normal and arrhythmia MLT-BIH database are applied to lookup table and compared with the acquired information and precise result of ECG signals is obtained. The main advantage of such system is that the FPGA can be itself used as a DSP processor that is capable of doing all image processing functions. This system is very efficient in terms if the power and the resources needed for its implementation.

REFERENCES

1. Lin, C. C., & Yang, C. M. (2014). Heartbeat classification using normalized RR intervals and morphological features. Mathematical Problems in Engineering, 2014.
2. Kim, J., Min, S. D., & Lee, M. (2011). An arrhythmia classification algorithm using a dedicated wavelet adapted to different subjects. Biomedical engineering online, 10(1), 56.
3. Alickovic, E., & Subasi, A. (2016). Medical decision support system for diagnosis of heart arrhythmia using DWT and random forests classifier. Journal of medical systems, 40(4), 108.
4. Banerjee, S., & Mitra, M. (2013). Application of cross wavelet transform for ECG pattern analysis and classification. IEEE transactions on instrumentation and measurement, 63(2), 326-333.
5. Behar, J., Oster, J., Li, Q., & Clifford, G. D. (2013). ECG signal quality during arrhythmia and its application to false alarm reduction. IEEE transactions on biomedical engineering, 60(6), 1660-1666.
6. Moody, G. B., & Mark, R. G. (2001). The impact of the MIT-BIH arrhythmia database. IEEE Engineering in Medicine and Biology Magazine, 20(3), 45-50.
7. Zidelmal, Z., Amirou, A., Adnane, M., & Belouchrani, A. (2012). QRS detection based on wavelet coefficients. Computer methods and programs in biomedicine, 107(3), 490-496.
8. Yeh, Y. C., Chiou, C. W., & Lin, H. J. (2012). Analyzing ECG for cardiac arrhythmia using cluster analysis. Expert Systems with Applications, 39(1), 1000-1010.
9. Chouakri, S. A., Bereksi-Reguig, F., & Taleb-Ahmed, A. (2011). QRS complex detection based on multi wavelet packet decomposition. Applied Mathematics and Computation, 217(23), 9508-9525.

10. Lenis, G., Pilia, N., Oesterlein, T., Luik, A., Schmitt, C., & Dössel, O. (2016). P wave detection and delineation in the ECG based on the phase free stationary wavelet transform and using intracardiac atrial electrograms as reference. Biomedical Engineering/Biomedizinische Technik, 61(1), 37-56.

AUTHORS PROFILE

M.Abirami, Under Graduate Student Electronics and Communication Engineering ,National Engineering College, Kovilpatti, Tamilnadu -628 503. Her research interest includes VLSI Modelling and Simulation.

J.Lavanya ,Under Graduate Student ,Electronics and Communication Engineering, National Engineering College, Kovilpatti, Tamil nadu – 628503. Her research interest includes VLSI Modelling and Simulation.

I.Merlin, Under Graduate Student ,Electronics and Communication Engineering,, National Engineering College, Kovilpatti , Tamilnadu. 628503.Her research interest includes VLSI Modelling and Simulation

Vivek Anand. I received B.E degree in Electronics and Communication Engineering from Sethu Institute of Technology (2012) and M.E degree in VLSI from Mepco Schlenk Engineering College (2014). He is currently working in National Engineering College, Kovilpatti, India as Assistant Professor. His research interest includes Modeling and Simulation of Tunnel Field effect Transistors.