International Journal of Recent Technology and Engineering (IJRTE)
ISSN: 2277-3878 (Online), Volume-8 Issue-6, March 2020

Benefits of Smart Traffic Systems(STS) and Different Techniques used for It

S. B. Honrao, U. D. Shiurkar

Abstract:Last few Decades Vehicles are increased rapidly in Indian roads, which indirectly increase the traffic problems as well as environmental problems like Accident, air and noise pollution. In the recent years different researchers used different techniques to develop Smart Traffic as well as to solve these issues. Smart Traffic Management also helpful for improving air quality, improve traffic safety, traffic control and helpful to reduce infrastructure damage.

Keywords: Smart Traffic, air quality, improves traffic safety, traffic control, infrastructure damage.

I. INTRODUCTION

In the last decades urban population increases rapidly, accordingly United Nations report it increase of 1.84% every year. In the whole world urban population constitutes about 56% and up to the 2050 it will become about 64% of the developing world and 86% of the developed world [1]. Numbers of vehicles are steadily increases in India, which causes the intensity of congestion and traffic occurrences. Traditional traffic signal system is not enough to control such situations of congestion as well as traffic. Traffic of vehicle increases the waiting time of the drivers which will indirectly increase pollution in a particular area as well as fuel consumption also. Traffic congestion is a bigger problem in the India and automation systems are currently not available [2].

Due to the traffic congestion waiting times, environmental pollution and fuel wastage gets increased. According to World Health Organization's (WHO) street car accidents is around 3% in 2013, because of dangerous condition on streets, the rate of mishaps. As pr WHO in India, 84,674 quantity of street mischance passing's were accounted in 2012, where as in 2014 it is expanded to 92,618 [3]. With the help smart traffic management system we can improve the traffic efficiency. We have to develop a system which not only manages the traffic signals but also it must work on real time data and manage the traffic on road rather than traffic signals.

Manuscript received on February 10, 2020.
Revised Manuscript received on February 20, 2020.
Manuscript published on March 30, 2020.
Correspondence Author
Mr. S. B. Honrao*, Electronics and Telecommunication Engineering department, VDF School of Engineering & Technology, Latur, India. Email : honrao.sachin@gmail.com
Dr. U. D. Shiurkar, Electronics & Telecommunication Engineering department, Deogiri Institute of Engineering and Management Studies, Aurangabad, India. Email: shiurkar@gmail.com

II. BENEFITS OF SMART TRAFFIC SYSTEM [4, 5]

As compare to traditional system STM system will provides more benefits. Some of the benefits are:

- By enhancing the flow of traffic will reduce regular congestion. That means less waiting time at intersections and lower emissions, increasing the air quality.
- Prioritize traffic based on changes in traffic conditions in real time.
- Smart Traffic Management system will improve traffic safety, because uncertain speeds, heavy traffic can all result in accidents and death.
- This system also helpful to reduce infrastructure damage. It is possible to identify overloaded vehicles and provide them appropriate way or road, which will reduced road damage.

III. BASIC FUNCTIONS OF SMART TRAFFIC SYSTEM [4]

Following are the some basic functions of the Smart Traffic System to improve traffic flow

1. Detecting congestion.
2. Synchronizing activity between traffic lights.
3. Updating traffic light timing in real time.
4. Updating and informing drivers of ideal speeds.
5. Prioritizing transportation flow.
6. Reduce congestion and time spent on the road
7. By reducing congestion it will decrease pollution

IV. DIFFERENT TECHNIQUES USED IN RECENT YEARS

Traffic light is a signaling tool at the junction of the highway. In 1868 John Peake Knight created the first manually operated traffic light, and in 1912 Lester Farnsworth Wire invented the first automated traffic light. Traffic light serves two primary objectives: by monitoring car motions, avoiding car accidents and facilitating traffic congestion. It consists of three standard lights of color: green, yellow and red. The green light enables drivers to move from specific highway boundaries; yellow light warns drivers to stop their vehicle; red light signals drivers that movement of cars is forbidden [6].In 1977 William C. Irwin, Y. E. [7] present planning and construction of a computerized traffic control system. In the 1989 A. Bedetti et al. [8] describes the GSI road management integrated software package developed by SOFOS S.r.1. and is implemented by using AutoCAD, AutoLISP, DBIII Plus, and a number of custom developed routines coded in the C programming language.

R.J. Blissett et al. [9] present Automatic Road Traffic Event Monitoring Information System (ARTEMIS). This scheme addresses several road traffic management criteria including: detection of incidents, tracking of road use and identification of vehicles. Professor Mike McDonald [10] focuses on advances in traffic management, data and route guidelines in Europe in the field of Applied Transport Telematics (ATT). T. M. Sayers et al [11] presents controllers that regulate a single intersection at different distances from the stop line using data from detectors on the junction approaches. The easiest devices (e.g. System D) track traffic to determine when to end green to the present stream and use the gap duration at a selected sensor as an indication that traffic flow is increasing lighter. When a certain limit (e.g. 3 seconds) is achieved, green will be stopped.

VittorioAstarita and Michael Florian [12] focuses on Electronic Toll Collection (ETC) by using mobile phones and estimating traffic flow parameters through the use of location information on mobile phones. These are the two areas that may have first helpful and efficient vehicle traffic control implementations. Hong Dai et al. [13] presents a combined model of traffic assignment and signal control. In this system by determined level of congestion to control traffic volume and signal timing, all this is done by using the fuzzy control. Figure 1 shows the process flow of fuzzy control algorithm.

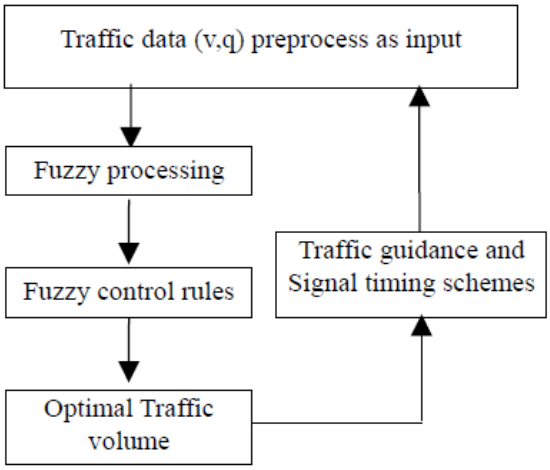

Figure 1. The process flow of fuzzy control algorithm of combined model [13]

L. Delica et al. [14] present NI LabVIEW based an Intelligent Traffic Control System, in which the traffic density by counting the number of vehicles. In this system Queuing Analysis is used to determine the average time a vehicle must wait in line. Queuing Analysis consists of Arrival Rate (the rate at which vehicles arrive at a junction, expressed as vehicles/hour), Service Rate (rate at which vehicles depart from the Junction) and the Number of Vehicles (is the number of vehicles that are being utilized and in the manner of parallel vehicles). Figure 2 shows the diagram of queuing analysis. Figure 3shows the Overall Diagram of the system.

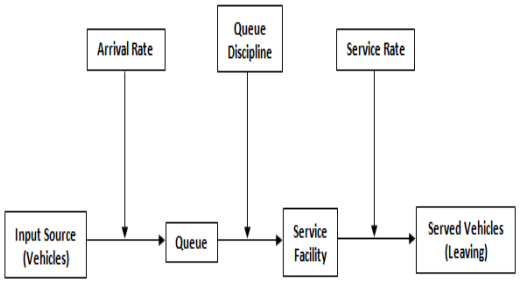

Figure 2. Diagram of Queuing Analysis [14]

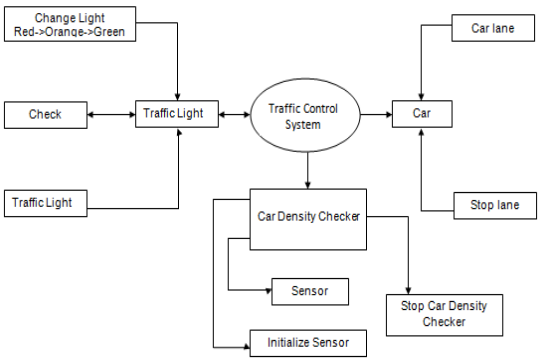

Figure 3. Overall Diagram [14]

Aneesa Saleh et al. [15] present intelligent traffic light control system contains Infrared sensors, Cameras and image processing algorithms were used to detect traffic density. Figure 4 shows the overall system, contains Traffic Light Control (TLC) and Red Light Camera (RLC) and coordinated by an Arduino Mega. Here cameras are controlled by computer system by using MATLAB algorithm.

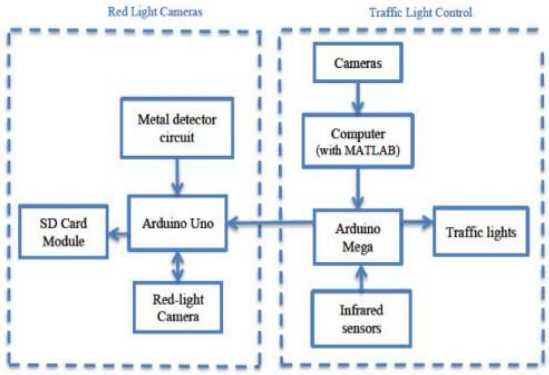

Figure 4 Overall system block diagram [15]

V. PROPOSED WORK

System contains four modules shown in the 5 a, b, c, d namely Road Device, Normal Car Device, Ambulance Device and Traffic Device.

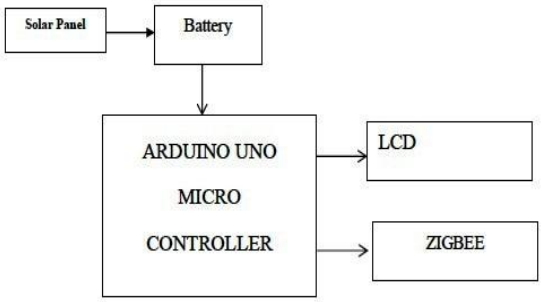

Figure 5a Road Device

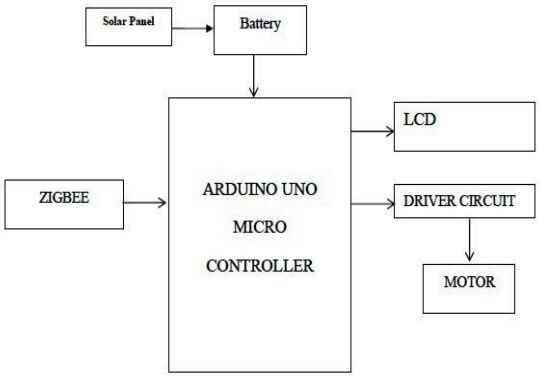

Figure 5 b Normal Car Device

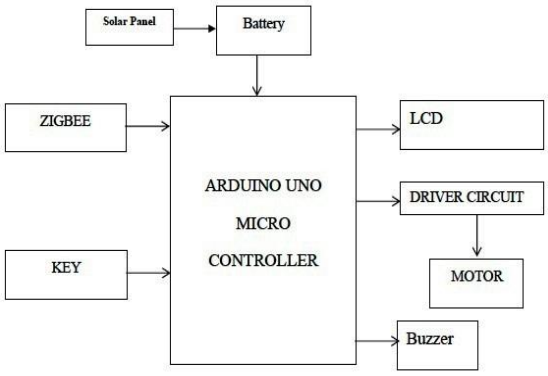

Figure 5c Ambulance Device

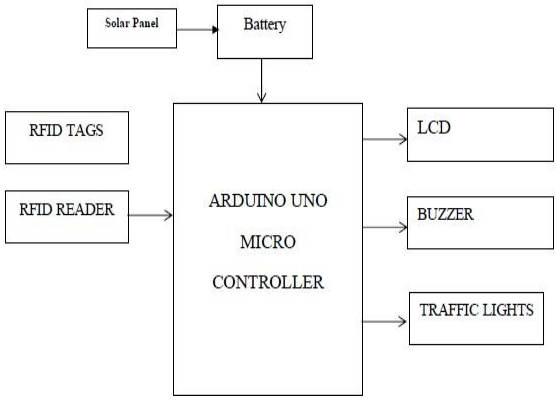

Figure 5d Traffic Device

It consists of a two Zigbee transceiver modules. The device is fixed at Predetermined position send the speed limit and gives notes about general facilities of the road like the word "emergency" to inform the drivers that there is an ambulance, this alert appear in a form of messages which displayed on the Liquid Crystal Display LCD. The other device is fixed on the car that received these messages wirelessly, and then displays it on the LCD. The road device is a transceiver that is fixed at predetermined location on the road, it receive information from zigbee. Also it send the speed limit and the information of the road to the normal car device and ambulance car device. The range of road speed implemented in this system is from 0 to 150Km/h. This device is fixed in the normal car and it is a receiver, the function of the normal car's device is to receive the information from the road device wirelessly through the Xbee. The information consists of zone, facilities and the id of the specific road in normal case. In the case of an ambulance on the road; the received information is the previous information plus the word "ambulance" to notify the driver there is an ambulance car.This device is a transceiver. The device receive the information consist of the facility of the specific road and send notification to the road device. To improve the system a new Green wave system is developed. In which the traffic signal management for emergency vehicle is include. To make the proposed system to work, each and every vehicle going for registration is provided with a RFID tag. In which information like vehicle's unique registration number and vehicle type is stored. The vehicle type is mentioned as E (For Emergency) and N (For Normal) in the tag. These data are stored in the database in the Transport office. To read the information in tag a RFID reader is installed in the Traffic control unit.Whenever the vehicle passed through the signal reader get the vehicle type and gives it to the controller unit. In which if any E (Emergency) type vehicle is found, that lane is made green w.r.to the other lanes. To upgrade further more theft vehicle detection method is used. To find a theft vehicle, the user has to contact the Transport office to update the database of the vehicle with T (for Theft).

VI. RESULT AND DISCUSSION

From the section IV, we found that there are different technologies are used in the recent years and useful to control or manage traffic. These systems are useful to control road accident, conjunction, which is indirectly impact on human life and environment. From the table 1, we found that different technologies are used, and Internet of Things) IoT having scope to improve the accuracy as well as efficiency of the smart traffic system in the feature. Table 1 provides quick review for the techniques used in the recent year for the STM system.

Table 1 Quick review on the techniques used in the recent year for the STM system

Sr. No.	Author	Technique	Details
1.	Hong Dai et al. [13]	A fuzzy control algorithm was used	Objective to reduce the rate of congestion at intersections and links
2.	L. Delica et al. [14]	Laboratory Virtual Instrument Engineering Workbench (LabVIEW)	Measure the traffic density by calculating the number of vehicles in each track and the traffic light time
3.	AneesaSaleh et al. [15]	Infrared sensors and cameras in combination with algorithms for image processing	The system monitors traffic lights on each side of the intersection based on traffic density.
4.	R. Bhargavi Devi et al. [16]	Arduino Uno ATMega 328P.	Traffic signal based on density with a delay of 1000ms for traffic control
5.	G.Rajavali et al. [17]	IR sensors are interfaced with the Arduino	Controls the traffic signal network by the density of the sensors.
6.	Raida Al-Alawi [18]	Embedded Web Servers (EWS) technology	The CTMU (Central Traffic Management Unit) was designed to pick a particular node to track the operating sequence of traffic lights and the presence of traffic at each intersection and alsoto control the activity of the signals remotely.
7.	HarshiniVijetha H and Dr. Nataraj K R [19]	Raspberry Pi, Pi-Camera, RFID, IR sensors.	This system time management for signal lights and it has automatic and manual operation also.
8.	S.Lokesh and T.Prahlad Reddy [20]	System used webcam, pc, Raspberry pi and OCCIDENTALIS and MATLAB software's are used.	Presents an Artificial Density Based Traffic Control System with a real-time emergency vehicle detection system
9.	Naveen S et al. [21]	PLC and Raspberry Pi	System control the green signal based on density of the road , Intelligient to pass the emergency vehicles, notify the penalty to signal jumpers
10.	MananTemani et al. [22]	LabVIEW	Focus on over-speeding, corruption, casualties, fuel prices and crisis,traffic management

VII. CONCLUSION

This paper provides the benefits of Smart Traffic System. Also provides the overview on different smart vehicle or traffic monitoring system as well as management systems which are based on the Internet of Things, Arduino based, Light Fidelity (Li-Fi) based, etc. Also provides the necessity of Smart Traffic System, with environmental, human life etc scenario.

REFERENCES

1. Mahesh Lakshminarasimhan, "Advanced Traffic Management System Using Internet of Things", ResearchGate, Nov. 2016.
2. Senthil Kumar Janahan, M.R.M. Veeramanickam, S. Arun, Kumar Narayanan, R. Anandan and ShaikJavedParvez, "IoT based smart traffic signal monitoring system using vehicle count", International Journal of Engineering & Technology, Vol. 7, 2018, pp.309-312.
3. AditiAvadhani and MousamiVanjale, "IOT Based Dynamic Road Traffic Management for Smart Cities", Jour of Adv Research in Dynamical & Control Systems, 13-Special Issue, November 2017, pp. 777-782.
4. https://mobility.here.com/smart-traffic-systems-101-components-benefits-and-big-data-connection
5. https://advanceaccess.ie/benefits-intelligent-transportation-systems/
6. Hon Fong Chong and Danny Wee Kiat Ng, "Development of IoT Device for Traffic Management System", IEEE Student Conference on Research and Development (SCOReD), 2016.
7. William C. Irwin, Y. E., "Planning and Construction of A Computerized Traffic Control System", 27th IEEE Vehicular Technology Conference, IEEE, 1977.
8. A.Bedetti, R.Daverio, B.DiStefano, E.Distefano, "The GSI Road Management Integrated Software Package", Conference Record of papers presented at the First Vehicle Navigation and Information Systems Conference (VNIS '89), IEEE, 1989.
9. R.J. Blissett, C. Stennett and R.M. Day, "New Techniques for Digital CCTV Processing in Automatic Traffic Monitoring", IEEE - IEE Vehicle Navigation & Information Systems Conference, Ottawa - VNlS'93, IEEE, 1993.
10. Professor Mike McDonald, "Developments in Traffic Management, Information and Route Guidance Systems in Europe", Vehicle Navigatioo& Information Systems Conference Proceedings, IEEE, 1994.
11. T. M. Sayers, M. G. H. Bell, Th. Mieden and F. Busch, "Improving the Traffic Responsiveness of Signal Controllers Using Fuzzy Logic", IEE Colloquium on Urban Congestion Management, IEEE, 1995.
12. VittorioAstarita and Michael Florian, "The use of Mobile Phones in Traffic Management and Control", intelligent Transportation Systems Conference Proceedings - Oakland (CA), USA, IEEE, 2001.
13. Hong Dai, Zhao-Sheng Yang, Xiao-Jun Jiang, "Application of Fuzzy Control in Combined Algorithm Between Traffic Guidance and Signal Timing", Proceedings of the Fifth International Conference on Machine Learning and Cybernetics, Dalian, IEEE, 13-16 August 2006.
14. Princess Dianne L. Delica, Maria Rowena U. Landicho, Jaybee Ann A. Tabliga, Lahlee R. Virtus, Rommel Anacan, "Development of an Intelligent Traffic Control System using NI LabVIEW", 7th IEEE International Conference on Control System, Computing and Engineering (ICCSCE 2017), IEEE, 24–26 November 2017.
15. AneesaSaleh, Steve A. Adeshina, Ahmad Galadima&OkechukwuUgweje, "An intelligent traffic control system", 13th International Conference on Electronics Computer and Computation (ICECCO 2017), IEEE, 2017.
16. R. Bhargavi Devi, D. Kavya Reddy, E. Sravani, GaddamSrujan, Shiv Shankar and ShubhroChakrabartty, "Density based traffic signal system using Arduino Uno", International Conference on Inventive Computing and Informatics (ICICI), IEEE, 2017.
17. G. Rajavali, Y. Sravani, P. Raju, G Mrudhulatha and CH Appalnaidu, "ARDUINO BASED SMART ROADS CONTROLLING SYSTEM FOR FUTURE CITIES", International Journal of Advanced technology in engineering and Science, Vol. No. 5, Issue No. 04, 2017.
18. Raida Al-Alawi, "Web-Based Intelligent Traffic Management System", Proceedings of the World Congress on Engineering and Computer Science 2009, Vol I, October 20-22, 2009.
19. HarshiniVijetha H and Dr. Nataraj K R, "IOT Based Intelligent Traffic Control System", International Journal for Research in Applied Science & Engineering Technology, Volume 5 Issue V, May 2017.
20. S.Lokesh and T.Prahlad Reddy, "An Adaptive Traffic Control System Using Raspberry PI", International Journal of Engineering Sciences & Research Technology, Vol. 3(6), June, 2014.
21. Naveen S, Deepika B, ShashiRekha, PreethiKantam and Binu K Banga, "Smart Traffic Control System using PLC and Raspberry Pi", International Journal of Innovative Research in Computer and Communication Engineering, Vol. 6, Issue 3, March 2018.
22. MananTemani, RohankAgarwal, Rhythm Kohli andMrinal Sen4, "Smart Approach to Traffic Management using LabVIEW", Fifth International Conference on Intelligent Systems, Modelling and Simulation, IEEE, 2014.