International Journal of Recent Technology and Engineering (IJRTE)
ISSN: 2277-3878, Volume-8 Issue-5, January 2020

Performance Analysis of Gudgeon Pin of Various Cross Sections by FEM

Saurabh Gupta, Ruchika Saini, Abhishek Kumar, Prateek Shrivastava

Abstract: ***Gudgeon pin are one of most heavily stressed component present in engine Gudgeon pin is used in automobile engines to connect piston and connecting rod. and its failure can cause seizure of the engine. Thus they are carefully designed. This project deals with gudgeon pin of different inner profiles keeping the outer diameter constant which is equal to piston boss to provide a more strengthen gudgeon pin. Profiles investigated are hollow, uniform stepped, tapered, step taper. The models with mentioned inner profiles keeping outer profile straight are made using CATIA and then analyzed for using ANSYS for parameters maximum principal stress, equivalent (von-mises) stress, strain energy and total deflection. Considering all these parameters most suitable design of gudgeon pin is decided. On investigation of the different profile it was found that step taper profile gave the best results .Thus providing a stronger gudgeon pin leading to decrease in chances of failure.***

Keywords : FEM, Gudgeon Pin , Hollow , Step Taper.

I. INTRODUCTION

In automobile, engine is the power generating body, which is an assembly of various mechanical components like piston, cylinder, connecting rod, crank case, crank shaft, crosshead and gudgeon pin. Gudgeon pin is also known as piston pin or wrist pin. Gudgeon pin connects piston to connecting rod and also provide a bearing surface for connecting rod to pivot as the piston reciprocates. Gudgeon pin forms a sliding fit with connecting rod and piston boss. The centre of piston pin should be 0.02 *D* to 0.04 *D* above the centre of the skirt, in order to off-set the turning effect of the friction and to obtain uniform distribution of pressure between the piston and the cylinder liner [1].Gudgeon pin are usually made of alloy steel of high strength. They are manufactured by forging. Gudgeon pin are generally made hollow. The reason for selecting hollow pin instead of solid pin is that for same volume hollow shaft is more stronger than solid as hollow shaft has more strain energy and offers reduce weight of the pin. The pin is lubricated by splash from the crank case, by oil forced through drilled passages in the connecting rods, or by the use of piston oil spray nozzles. Pin may be secured in the connecting rod assembly in one of the three ways:

- Rigidly fastened into the piston bosses.
- Clamped to the end of the rod.
- Free to rate in both piston and rod.

When pin is secured by the above mentioned methods, the pins are identified as stationary, semi floating and full floating respectively. In this project stationary gudgeon pins are investigated. Working of gudgeon pin can be described as when the combustion of fuel takes place in the combustion chamber over the piston head, due to large pressure piston moves downward from top dead centre to the bottom dead centre and hence this pressure is transferred to the gudgeon pin, also it bears the pressure from connecting rod while piston moving from botton dead centre to the top dead centre. Kamble et al. [2] designed hollow gudgeon pin considering it as simply supported beam where the pressure is applied to the surface in contact with connecting rod and ends which are secured using bearings in piston bosses are used as hinged supports, this work concentrated to minimize stress distribution in gudgeon pin. Yu et al. [3] analyzed the failure of gudgeon pin by spectroscopy chemical analysis.

II. METHODOLOGY

A. FORCE ANALYSIS OF GUDGEON PIN

A gudgeon pin is designed on basis of maximum inertia force or maximum gas pressure whichever is greater. As stated piston pin acts as bearing for connecting rod to pivot while piston reciprocates. The bearing area of the piston pin should be equally divided between connecting rod bushing and piston bosses. The outer diameter of the gudgeon pin is determined by equating the force acting on the piston due to gas pressure and resisting force offered by piston pin at small end of connecting rod bushing.

$$\left(\frac{\pi D^2}{4}\right) p_{max} = (p_b) * d_0 * l_1$$

Where (p_{max}) = Maximum gas pressure (MPa)
(p_b) = Bearing pressure at the bushing of small end of connecting rod (MPa)

Manuscript published on January 30, 2020.
* Correspondence Author
Saurabh Gupta*, Department of Mechanical Engineering, Jabalpur Engineering College, Jabalpur, India. Email: saurabhgpt075@gmail.com
Ruchika Saini, Department of Mechanical Engineering, Jabalpur Engineering College, Jabalpur, India. Email: ruchikasaini222@gmail.com
Abhishek Kumar, Department of Mechanical Engineering, Jabalpur Engineering College, Jabalpur, India, Email: seth.abhishek02@gmail.com
Prateek Shrivastava, Department of Mechanical Engineering, Jabalpur Engineering College, Jabalpur, India Email: 17prateek91@gmail.com

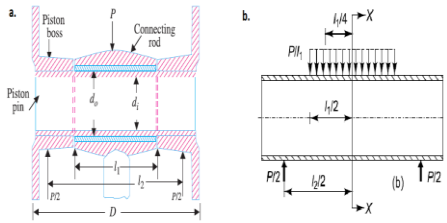

Fig. 1. Piston pin as a beam

- The bearing pressure at the bushing of the small end of the connecting rod (p_b) is taken as 14 MPa.[4]
- Standard Bore Diameter of piston and piston pin of Mahindra Scorpio is taken as 94mm and 32mm respectively [5].
- The inner diameter of the piston pin is taken as 0.6 times of the outer diameter $d_i = 0.6do$ [6].
  $d_i = 19.2$ mm
- It is assumed that the length of the pin in the connecting rod bush is 45% of the piston diameter (D) or cylinder bore [6].
  $L_1 = 42.3$mm
- Maximum Gas Pressure is taken as 3.5 MPa.
- The gudgeon pin is treated as Beam which is simply supported [7] by piston boss and subjected to Uniformly Distributed Load of 580 N/mm.
- Surface length over which load is applied = 42.3 mm

Material used for gudgeon pin is EN36A Case Hardening Steel [8], whose properties are given below:

Table 1. Properties of EN36A Case Hardening Steel

Property	Value
Young's modulus	210 GPa
Poisson ratio	0.3
Yield strength	865 MPa
Tensile strength	1080 MPa

B. Different Gudgeon Pin Design

Models with different inner profiles are shown in figure below keeping total length equal to 94mm including length of at both the ends for fixed support.

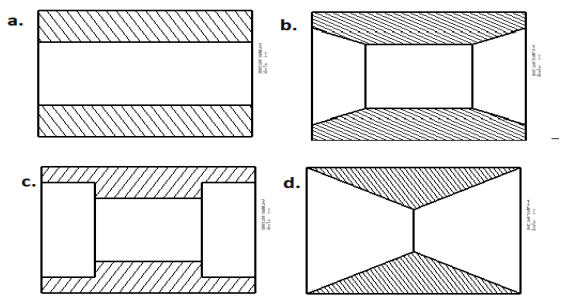

Fig 2. (a) Hollow section (b) Step Taper section (c) Stepped Section (d) Tapered section

III. ANALYSIS

For analysis finite element method is to be applied on to a pin by the use of CAD software, the process is broken in two steps,

1. *Preparation of model in designing software*

For the preparation of CAD model; we used 3D modeling software CATIA V5 R20 by Dassault Aviation.

2. *Analysis performed in ANSYS software*

Analysis of the modeled geometry was done in ANSYS 2019 R3 Software, where the CAD file were imported in '.iges' format. The control volume was analyzed in smaller finite element by using the meshing feature of ANSYS software. Size of meshing was set to default with display style to use geometry setting feature.

A. Hollow Gudgeon Pin

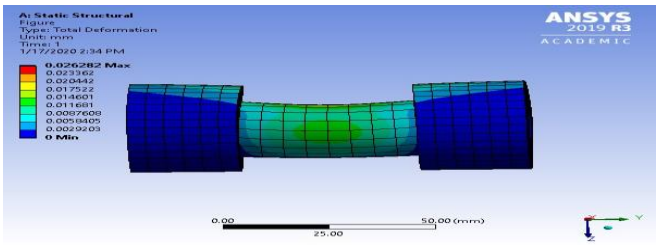

Fig .3. Total Deformation

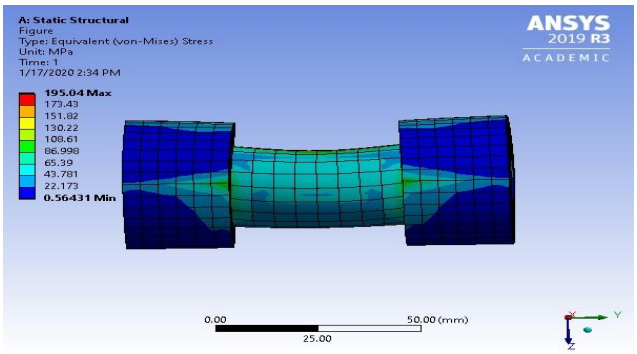

Fig. 4. Equivalent (von-mises) Stress

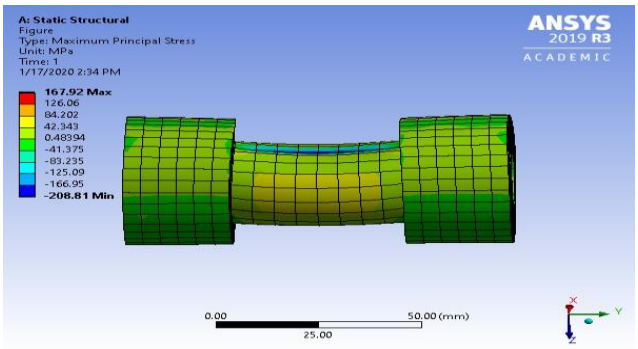

Fig.5. Maximum Principal Stress

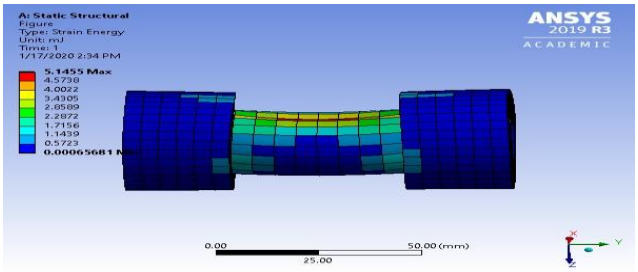

Fig. 6. Strain Energy

B. Stepped Gudgeon Pin

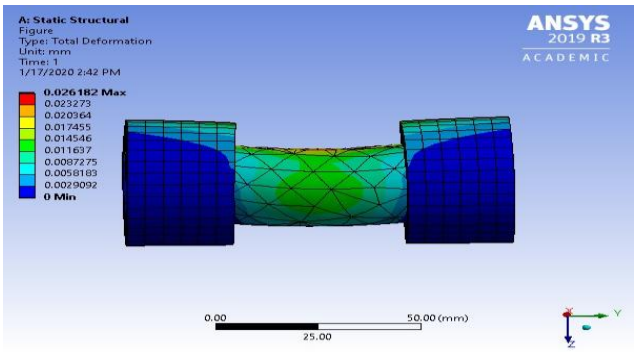

Fig .7. Total Deformation

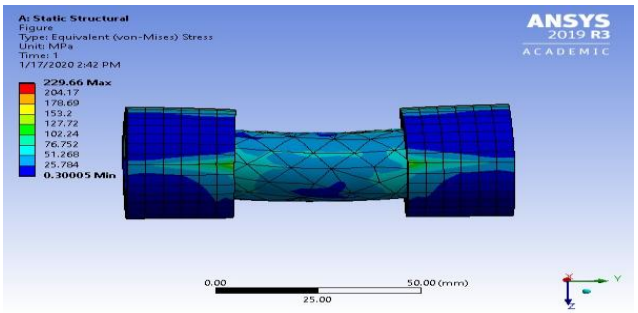

Fig. 8. Equivalent (von-mises) Stress

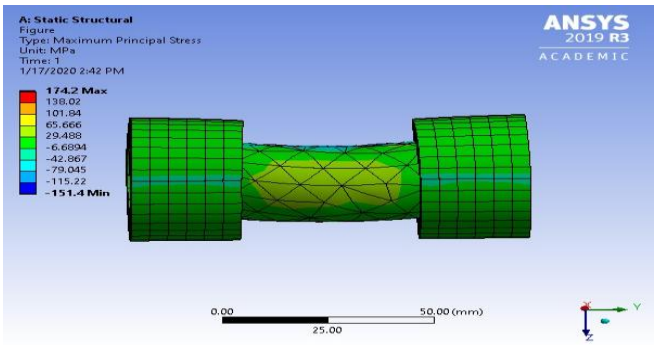

Fig.9. Maximum Principal Stress

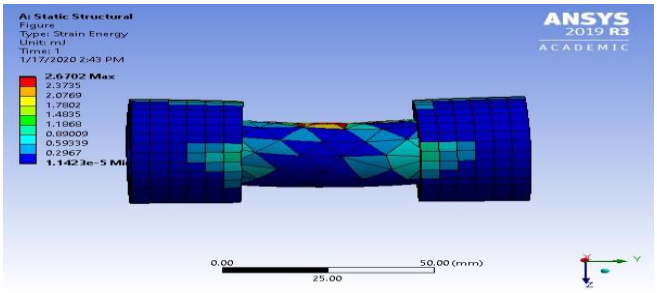

Fig. 10. Strain Energy

C. Step Taper Gudgeon Pin

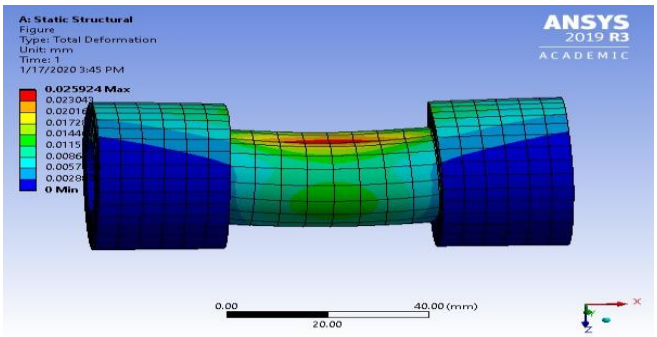

Fig .11. Total Deformation

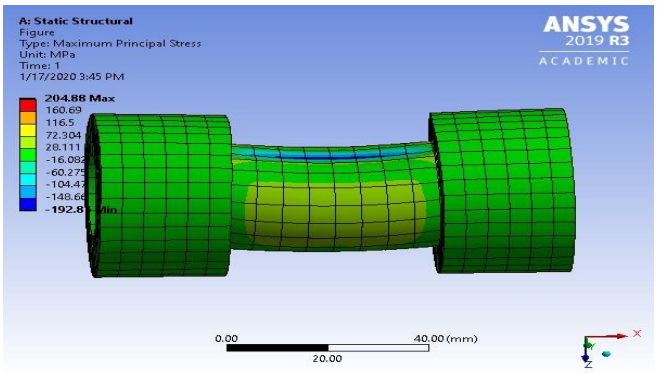

Fig.12. Maximum Principal Stress

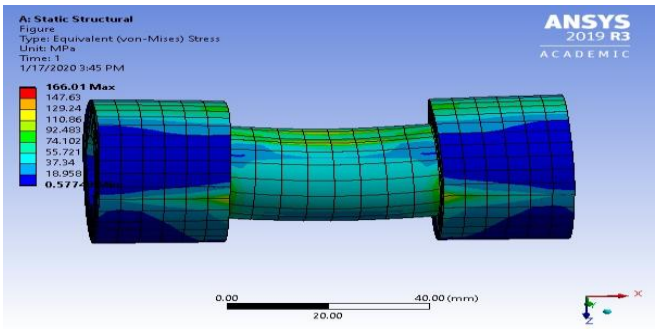

Fig. 13. Equivalent (von-mises) Stress

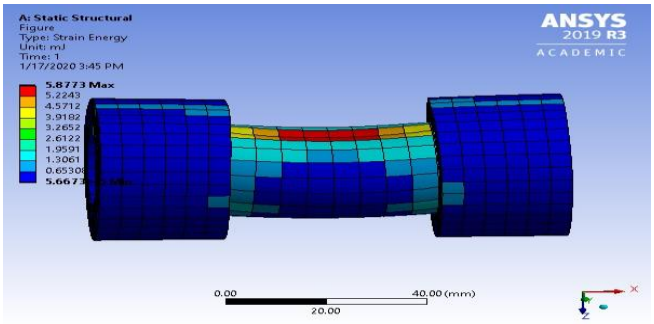

Fig. 14. Strain Energy

D. Tapered Gudgeon Pin

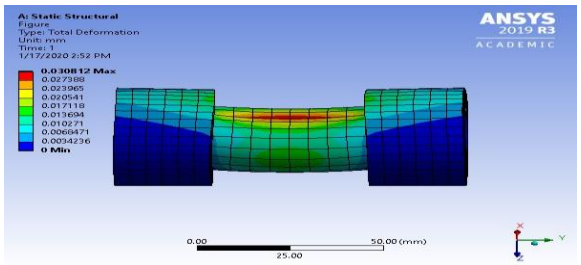

Fig .15. Total Deformation

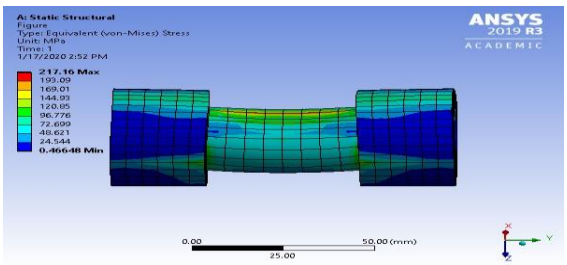

Fig. 16. Equivalent (von-mises) Stress

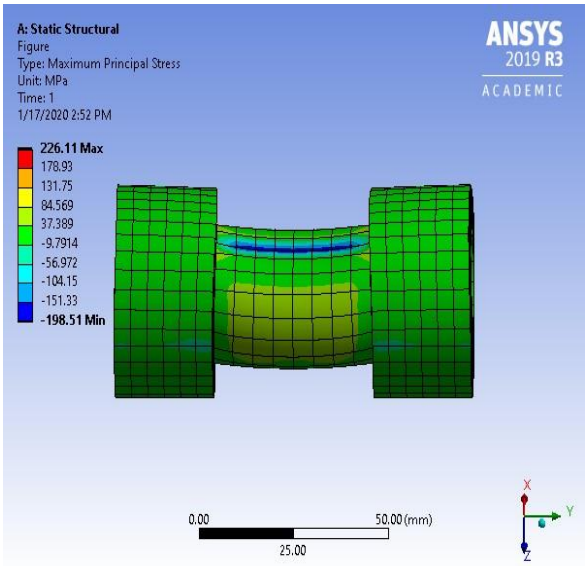

Fig 17. Maximum principal stress

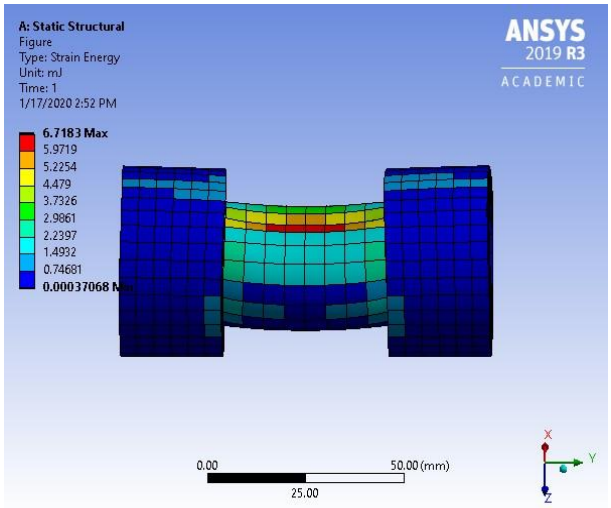

Fig. 18. Strain Energy

IV. RESULTS AND DISCUSSION

Table 2. Various Parameter obtained by ANSYS

S. No	Inner Profile	Total Deformation (micrometer)	Equivqlent stress (MPa)	Maximum Principle Stress (MPa)	Strain Energy (mJ)
1	Hollow	26.30	195.04	167.92	5.15
2	Stepped	26.18	229.66	174.20	2.67
3	Step Taper	25.92	166.01	204.88	5.88
4	Tapered	30.81	217.66	226.11	6.72

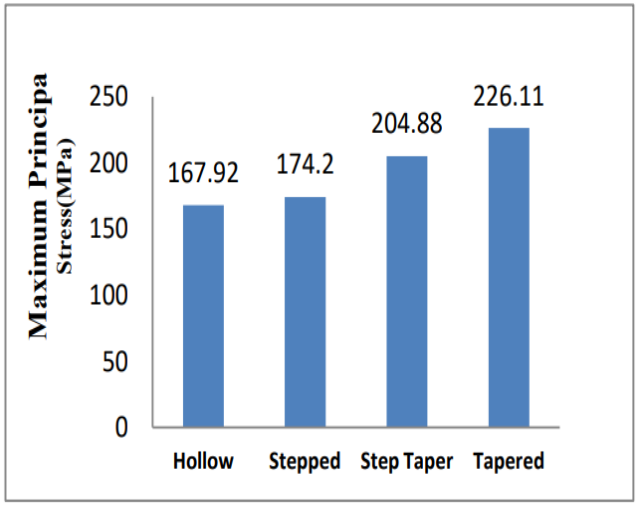

Fig. 19. Comparison of Max. Principle Stress

From Fig. 19 it is noticeable that maximum principal stress shows a increasing trend for the sequence of components having inner surface hollow, tapered, stepped and stepped tapered for the same total length of the gudgeon pin. Maximum Stress is obtain near point where change of profile in Stepped, Step Taper and Tapered Cross section is present.

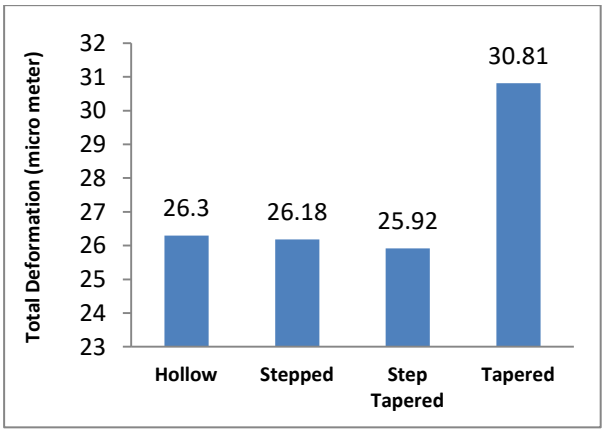

Fig .20. Total deformation

Fig .20. shows total deformation of the gudgeon pin. For the sequence of inner profiles step tapered, stepped ,hollow and tapered total deformation shows a decreasing trend. Maximum deformation occur at point where load is applied.

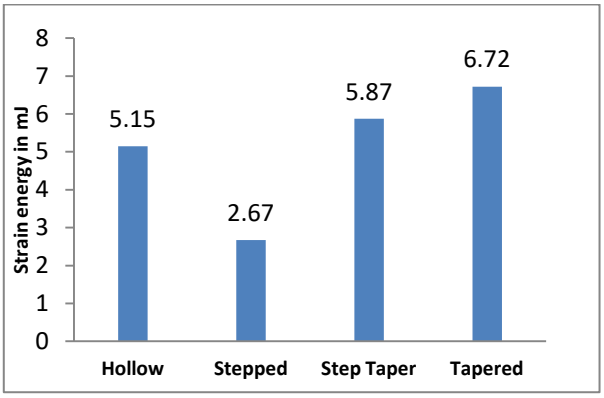

Fig .21. Strain energy

Fig.21. represents strain energy distribution for various mentioned profiles of gudgeon pin. Strain energy has increasing slope for sequence of profiles stepped, hollow and tapered. Minimum strain energy is shown by stepped section.

Step Taper also gives strain energy comparable to hollow section

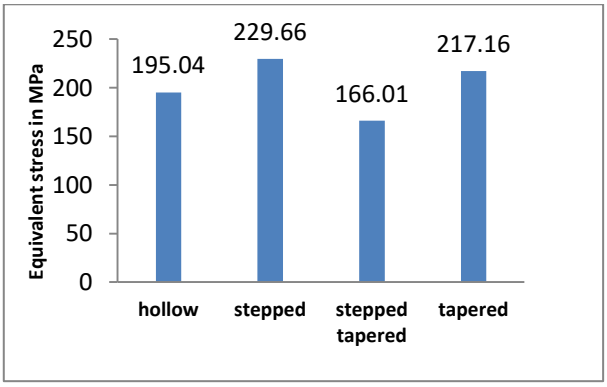

Fig. 22. Equivalent (von-mises) stress

Fig .22. Shows von mises stress distribution for components, and has an increasing trend for sequence of components hollow, tapered , stepped taper , stepped. It is noticeable that for linear variation of cross section stress is maximum, for stepped cross section i.e for sudden change also component has high stress value, but combination of tapered and stepped has least value of stress.

V. CONCLUSION

Gudgeon pin can be selected on basis of different parameter according to its requirement.

- On the basis of Minimum Deformation Stepped Taper gudgeon pin is most suitable whereas highest deformation occurs in Tapered Cross section.
- On Basis of equivalent Von Misses stress, Stepped Taper is most suitable. Step Taper gudgeon pin although shows increase in Maximum Principle stress it is well below yield point. Least Maximum Principle Stress is offered by hollow gudgeon Pin.
- On basis of strain energy criteria Stepped cross section have minimum strain energy. Hollow and Step taper cross section offers comparable results.
- Considering all the parameters, gudgeon pin with step taper inner profile gives best results. As it offers least deformation and least equivalent Von Misses stress and strain energy comparable to hollow section.
- Hence Step Taper profile gives greater strength gudgeon pin for same dimension of pin and by providing step taper cross section to gudgeon pin can decrease the chances of failure of the pin.
- Further work can be done to optimize the step taper profile dimension.

REFERENCES

1. R S Khurmi , J K Gupta , *A Textbook of Machine Design*, Eurasia Publishing House (Pvt.) Ltd. ,2005,pp. 1138-1140.
2. Vijay Baban Kamble, K. S. Mangrulkar, Mithun D. Shah, Hrushikesh B. Kulkarni," Design and Analysis of Gudgeon Pin to Minimize Stress Concentration". doi:10.23883/ijrter.2018.4208. 9dp0a.
3. Zhiwei Yu, Xiaolei Xu , Hongxin Ding, Failure analysis of a diesel engine piston-pin. Engineering Failure Analysis 14 (2007) 110–117.
4. D.Gopinatha,Ch.V.Sushmab "Design and Optimization of Four Wheeler Connecting Rod Using Finite Element Analysis" 4th International Conference on Materials Processing and Characterization Materials Today: Proceedings 2 (2015) 2291 – 2299.
5. Product Catalogue, Shriram Piston and Rings Limited. https://www.shrirampistons.com
6. V B Bhandari, *Design of Machine Element*, 3rd ed.,McGraw Hill,pp. 858-859.
7. Ramamurti, S. Sridhar, S. Mithun, B. Kumaravel, and S. Lavanya, "Design Considerations of Gudgeon Pin inReciprocating Air Compressor by Semi Analytical Approach", Key semi analytic method, JMER vol. 4(3), pp. 75-88,March 2012.
8. Product Catalogue, Interlloy Engineering steels and alloys www.interlloy.com.au/our-products/case-hardening-steels/en36a-case-hardening-steel/

AUTHORS PROFILE

Saurabh Gupta, is final year student pursuing Masters in Machine Design from Jabalpur Engineering College. His research interest includes CFD , FEM and simulation .

Prateek Shrivastava, is final year student pursuing Masters in Machine Design from Jabalpur Engineering College.

Ruchika Saini, Assistant Professor in Mechanical Engineering Department, Jabalpur Engineering College, Jabalpur

Abhishek Kumar, Assistant Professor in Mechanical Engineering Department, Jabalpur Engineering College, Jabalpur. He is among the fewest faculty members in India who were selected by Indian Institute of Technology Kanpur as a visiting researcher (June - July, 2018) to perform cutting edge research under its premises, and worked on the research topic "Assessing the fretting wear behaviour of aged-AZ80 magnesium alloy". He have been awarded certificate of excellence by Researcher Academy (Elsevier) on successfully completing "Certified Peer Reviewer Course", and have been selected as a journal referee for "Journal of Magnesium and Alloys" (indexed in Scopus, journal impact factor = 4.523), a peer reviewed open access journal.