International Journal of Recent Technology and Engineering (IJRTE)
ISSN: 2277-3878, Volume-8 Issue-5, January 2020

Mathematical Modelling and Implementation of Solar Based Water Pumping System for Irrigation

Kunal Kenge, Mohit Hasija, Ruchika Tare, Santosh S. Raghuwanshi

***Abstract:** This paper presents mathematical design of solar based irrigation system for water pumping employing MATLAB/Simulink environment. Perturb and observe (P&O) technique, which is an algorithm, is used for obtaining maximum amount of power from the output. The Perturb and Observe MPPT technique is realized on a cuk converter. The performance of PV system is tested at various solar irradiance and temperature of cell. The results confirmed that motor-pump speed, current and power increases on increasing solar insolation. This paper and piece of research will aid system designers in analyzing the performance of the system at various atmospheric condition in rural irrigation.*

***Keyword:** PV generator, Cuk converter, inverter, motor-pump, P&O algorithm*

I. INTRODUCTION

Among the non-conventional sources of energy, the energy obtained from solar irradiations are the most useful and viable resource due to its presence in lump sum amount and its imperishability. Due to recent changes in environment like global warming and increment in the use of electricity by the consumers there is need for a source of energy which is cheaper and imperishable along with low to no emission of carbon affecting the environment. The course of action to remove this barrier is to find such a source of energy which is feasible and unceasing [1]. The conversion of energy from solar irradiation to electrical energy is done by photovoltaic modules. The key factors on which the energy obtained from photovoltaic modules depends are solar irradiation, produced voltage in module and temperature of the surrounding. Voltage and current obtained at the terminal of the photovoltaic module is enough to run a small load. Simulation of the PV module for maximum power point tracking for solar based applications is necessary as it has non-linear characteristics.

Manuscript published on January 30, 2020.
* Correspondence Author
Kunal Kenge*, Department of Electrical Engineering, Medi-Caps University, Indore, India.
Email- kunalkenge12345@gmail.com
Mohit Hasija, Department of Electrical Engineering, Medi-Caps University, Indore, India. Email- mohith686@gmail.com
Ruchika Tare, Department of Electrical Engineering, Medi-Caps University, Indore, India. Email- ruchika19.tare@gmail.com
Santosh S Raghuwanshi, Asst. Prof., Department of Electrical Engineering, Medi-Caps University, Indore, India.
Email:santosh.raghuwanshi@medicaps.ac.in

Power generated from the PV module is small and therefore to obtain maximum power from the module irrespective of the condition of weather outside we employ MPPT techniques which tune the system for always delivering maximum power. The problems like

Discontinuous conduction and power loss are avoided by direct control of Cuk converter. Ideal PV system is still a myth and researches are conducted for building one. Since the maximum power point of the solar module varies with variation in irradiation and temperature the design of MPPT using MPPT algorithm becomes a priority [2-3]. Today many of the irrigation and drinking water systems are running successfully due to the researches published on the standalone solar water pumping model[4]. The developed solar pumping models are tested against all parameters and at different insolation levels. Development and testing of the irrigation system is done throughout the states in India. Agricultural irrigation and livestock's demand for water is increasing day by day in rural areas of state MP. Diesel, kerosene and other fossil fuels along with electricity are traditionally used sources for pumping of water. Since continual availability of fuel is a major issue, the idea of solar based water pumping system is gaining over the market. Another issue which prevents efficient working or functioning of the PV array is the load matching [5-6]. This paper presents PV energy generator is connected to Cuk converter with P&O based MPPT controller. This work also presents solar water pumping system (SWPS) performance at different atmosphere conditions. The developed system was tested and simulated in MATLAB/Simulink to obtain optimal maximum power.

II. SOLAR WATER PUMPING SYSTEM

The solar irrigation pump system is the system in which solar energy is responsible for the operation of the pump. Energy obtained from the sun is called solar energy and this is renewable source of energy and is in huge amount. Monitoring the water level of the soil along with manual operation of the irrigation pump is a tedious job. Therefore the following proposed system employs solar energy for the same by using photovoltaic cells rather than electricity which is commercially available. Figure 1 depicts solar based water pumping system for irrigation.

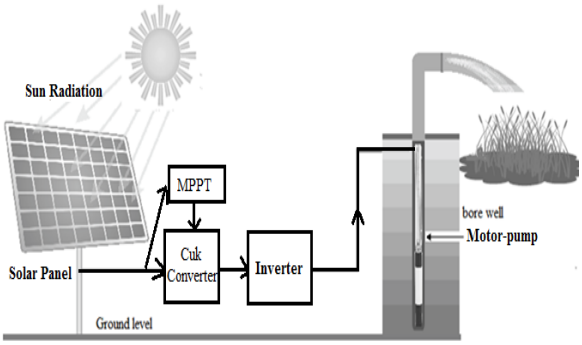

Fig. 1: Solar water pumping system [7]

A) PV energy system

The sun rays (energy) called photons, which then falls on the solar panel and strikes the electron and we know motion of electron means production of current this process is nothing but photovoltaic effect. Each panel in it produce small or the huge amount of energy, but it can we increase further just by connection them in combination of series and parallel. The electricity produces from a panel or an array is in the form of direct current. Circuit diagram of basic photovoltaic system configuration is given in Fig.2.

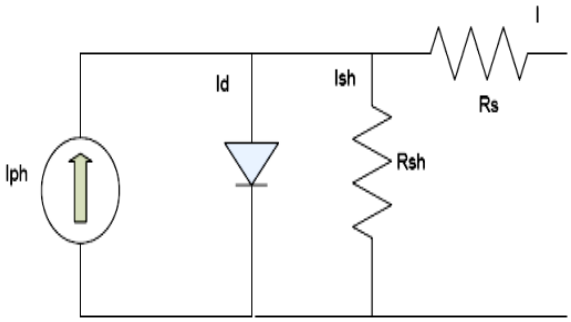

Fig. 2: Basic circuit diagram of PV module [8]

Current generated by the sunlight also known as photo current varies on varying the solar irradiance and temperature and is represented by the following mathematical equations.

Current obtained at the output of the cell is (I_{pv}) [4-8]:

$$I = I_{pv} = I_{ph} - I_d - I_{sh}$$

(1)

Photo current obtained from the module is

$$Iph = [Isc + Ki(T - 298)] * \left[\frac{G}{1000}\right]$$

(2)

Reverse current of saturation is given by [6-8]

$$Irs = \frac{Isc}{\exp\left[\frac{q*Voc}{Ns*k*n*T}\right]-1}$$

(3)

Diode current given by

$$Id = Irs\left(\frac{T}{Tr}\right)^3 * \exp\left[\frac{q*Eo}{n*k} * \left(\frac{1}{T} - \frac{1}{Tr}\right)\right]$$

(4)

Shunt résistance current is [7-8]

$$Ish = \frac{(V+I*Rs)}{Rsh}$$

(5)

Output current from PV is

$$I = Iph - Io\left[\exp\left(q * \frac{V+I*Rs}{n*k*Ns*T}\right) - 1\right] - Ish$$

(6)

Where,

I_d refers to the current flowing through the diode (A)

I_p refers to the current which is flowing in the shunt branch (A).

q refers to the charge of the electron $= 1.6 \times 10^{-19}$C

V gives the voltage across the diode (V),

K gives the Boltzmann's constant= 1.38×10^{-23} (J/K)

T refers to the temperature of the junctionin Kelvin

T_r gives the reference temperature =298K

ngives the ideality factor = 1.6

K_i refers to temperature coefficient of short circuit current

E_o refers to the band gap energy of silicon = 1.1eV

N_s refers to number of cells connected in series

N_P refers to number of cells connected in parallel

R_s and R_{sh} gives the series and shunt resistance respectively.

B) Cuk converter

The Cuk converter is a non-isolated DC-DC converter in which we obtain output voltage greater or lesser compared to the input voltage. It acts as a buck-boost converter but has reverse polarity voltage compare to it. It has very high switching frequency therefore the switching losses are very less and is more efficient compared to all non-isolated DC-DC regulators. Output voltage of Cuk converter is given by [9]

$$V_o = -\frac{D}{1-D}V_{in}$$

(7)

The value of a cuk inductor L and capacitor are:

$$L = \frac{V_o D}{\Delta If}$$

(8)

$$C = \frac{V_o D}{\Delta V_c fR}$$

(9)

In the above two equations Vin refers to the input voltage, Vo gives the output voltage, D is the duty ratio of the converter, ΔI gives the ripple current , ΔVc gives us the ripple voltage, f is the frequency of switching and R is the resistance of the load.

C) Inverter

Device that converts DC into AC voltage or current with the help of power electronic devices is known as inverter. Inverter finds its application in standalone systems employing solar power or it can be employed as the backup supply from batteries which can be charged separately. We can also obtain AC voltage from DC power sources, it also finds its application in powering electronic and electrical equipment rated at AC mains.

Inverter efficiency is given by [9-10]

$$\eta_{inv} = \frac{P_{out}}{P_{in}} \quad (10)$$

Pout = output power in AC in kW
Pin = input power in AC in kW

D) Motor-pump set

Motor pump system use a 3 phase AC induction motor with centrifugal pump for pumping water. It generally employs motor known as asynchronous motor.

Asynchronous motors are of two types squirrel cage and slip ring. Operating principle behind operation of asynchronous motor is based on rotating magnetic field. The asynchronous machine used is squirrel cage induction motor in which excitation is given by torque.

E) P&O Algorithm for MPPT

The MPPT employing P and O algorithm adjusts voltage coming out from the PV array by a little amount and measures the power, if further increment in power is observed further changes are made in that direction until no increment in power is observed. The method described above is known as perturb and observe method. Perturb & observe method may result in high efficiency. Figure 3 depicts the P&O algorithm flowchart.

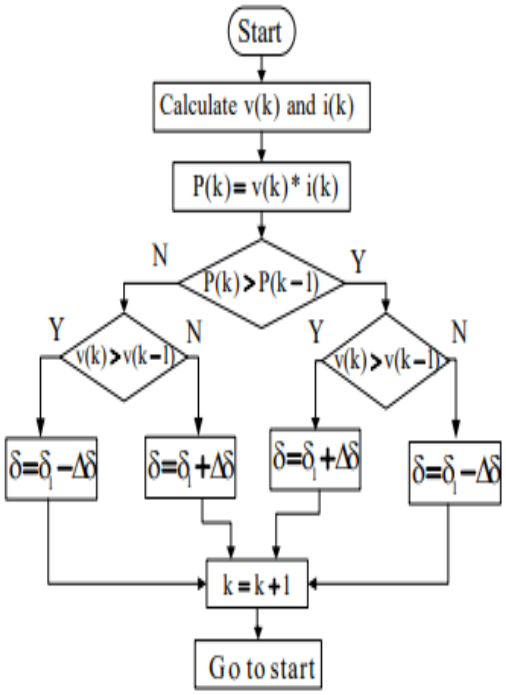

Fig. 3: P&O algorithm [10-11]

III. DESIGNING OF SOLAR BASED WATER PUMPING SYSTEM

A) PV generator modeling:

Basic math blacks can be used for flourishing the PV model. Electricity is produced from the power of the heat and light coming from the solar energy. Solar-electric power is produces using various technologies and using solar cells electrical energy is obtained by converting solar irradiance. The following steps to design a PV generator using mathematical equations.

Step-1: to design photo current diagram using eq (1). The diagram is shown in Fig. 4.

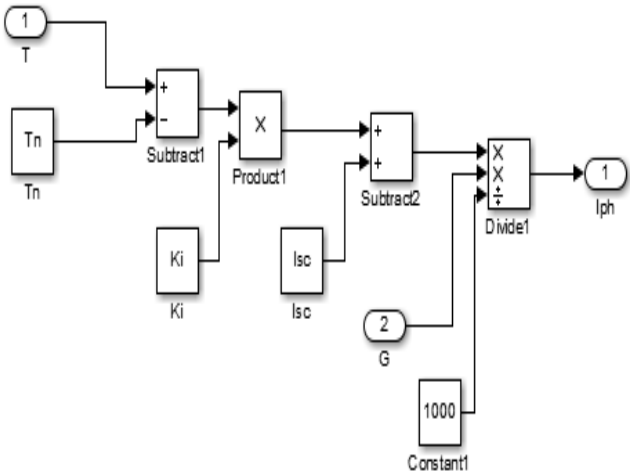

Fig. 4: Photo current diagram using MATLAB/Simulink

Step-2: to design reverse saturation current model using eq (2). The diagram is given in Fig. 5.

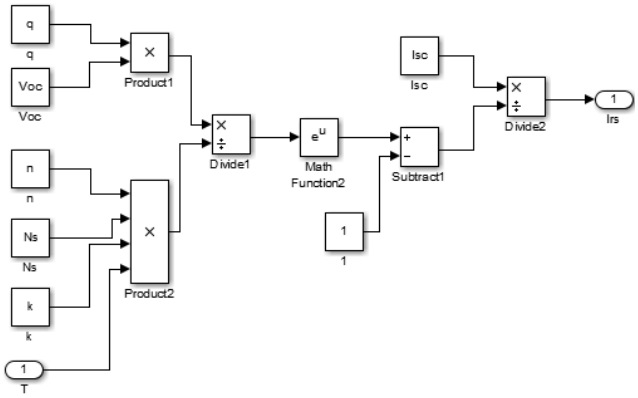

Fig. 5: MATLAB/Simulink diagram for reverse saturation current

Step-3: to design diode current model using eq (3). The diagram is given in Fig. 6.

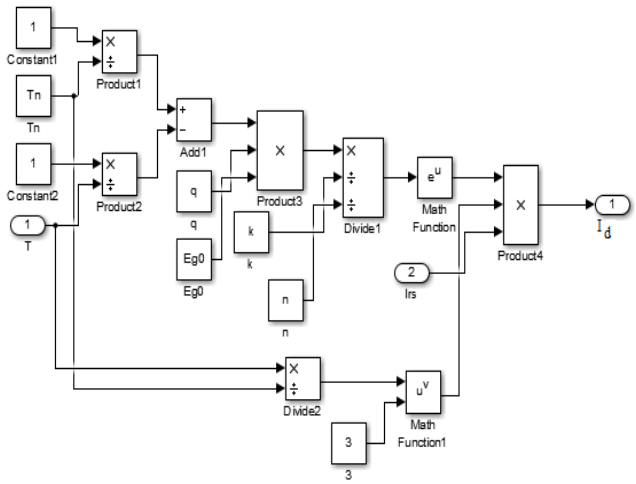

Fig. 6: MATLAB/Simulink diagram for diode current

Step-4: to design shunt current model using eq (4). The diagram is given in Fig. 7.

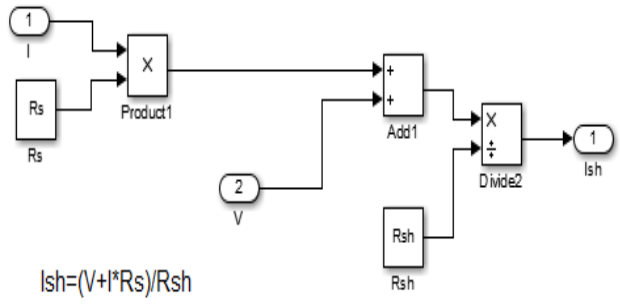

Fig. 7 :MATLAB/Simulink diagram for shunt current

Step-3: to final photovoltaic current model using eq (5). The diagram is given in Fig. 8.

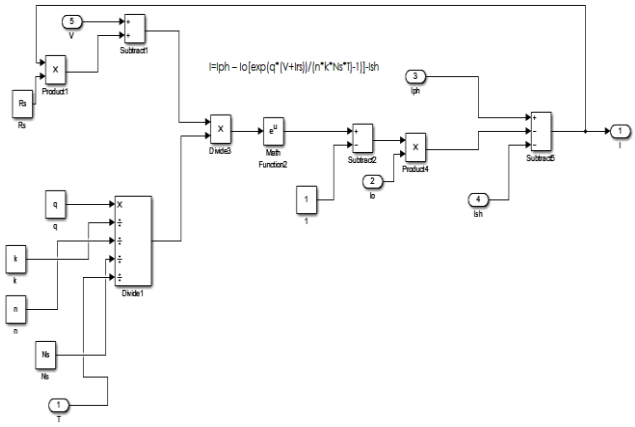

Fig.8: MATLAB/Simulink diagram for photovoltaic current

Combination of PV cell make PV modules and similarly combination of PV modules make a PV array. The current in PV system is increased by series connection while the voltage is increased with the parallel connection. Combination of the cells in series and parallel make the array of 5 kW which is given in Fig. 9.

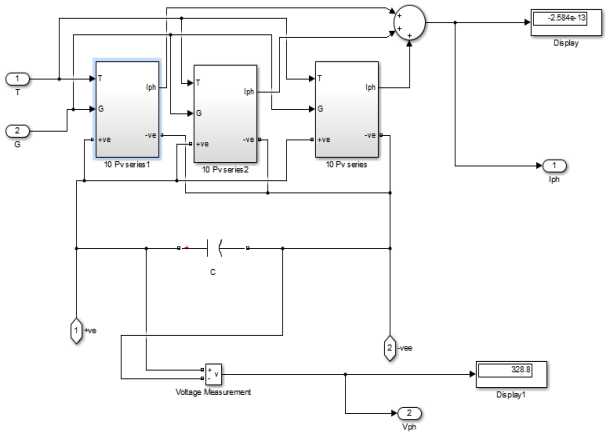

Fig. 9: Photovoltaic generator

B) Modeling of Cuk Converter

Cuk converter is design by using eq (7) to eq (9). The value of inductance and capacitance are 34 mh and 130 µF. Cuk converter modelling is given in Fig. 10.

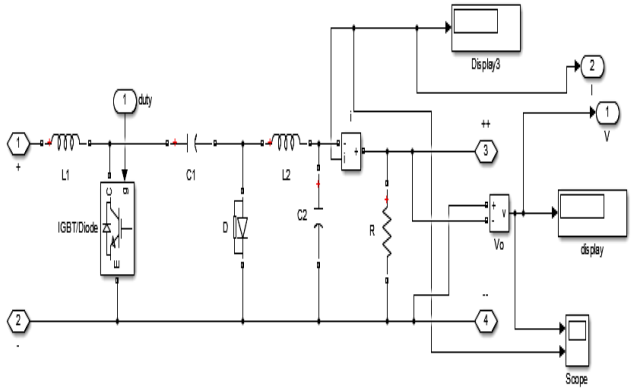

Fig.10: Cuk converter model

C) Solar pump inverter

Harmonic current is produced in proportional to load by inverter. For achieving good control and to avoid harmonic problem, we choose PWM technologies based inverter.

D) Modeling of water pump

Motor output power is the produce of developed torque T_e and speed ω_m, T_e can be expressed as [5]

$$T_e = \frac{P_o}{\omega_m} = \frac{3}{\omega_m} I_r^2 R_r \frac{1-s}{s} = 3\left(\frac{P}{2}\right) I_r^2 \frac{R_r}{S\omega_e}$$

(11)

The current I_r is figured out by [5-6]:

$$I_r = \frac{V_s}{\sqrt{\left(R_s + R_r / S\right)^2 + \omega_e^2 \left(L_{ls} + L_{lr}\right)^2}}$$

(12)

Pump torque are

$$T_l = \frac{K_{pump}}{\omega_m^2}$$

(13)

Where T_l is load torque to drive the centrifugal pump and ω_m is the mechanical speed of the shaft.

E) MPPT

To maximize power in all conditions in solar photovoltaic systems maximum power point tracking algorithms are employed. The power transfer of solar cell depend on amount of sunlight on the panels and electrical characteristics of load which defines the efficiency of MPPT. Sunlight amount varies because of weather and all the load characteristic changes, so the efficiency changes as load character changes. The above load characteristics is called maximum power point and the process of finding this point and keeping the load characteristics there is called MPPT.

IV. RESULTS

A 5 kW PV generator have been design for 3 horse power, 5 horse power, 3.70 kW underwater (motor-pump). PV generator output voltage and power at different insolation

is given in Fig.11.From the figure it is evident that voltage and power increases with increase in insolation. At 1000w/m^2 solar insolation PV generator have achieve 5kW power.

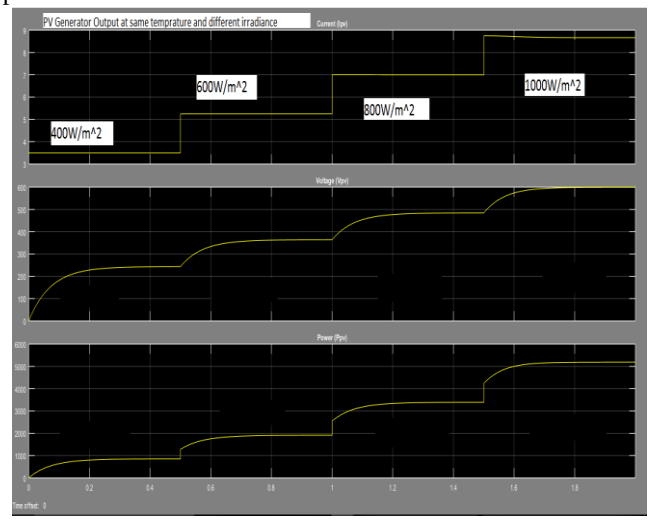

Fig.11: PV generation power at same temperature and different irradiance

Table-1: PV generator voltage, current and power at different insolation

Insolation (w/m^2)	PV voltage (V)	PV current (A)	PV power (W)
400	220	4.4	950
600	370	5.4	1990
800	490	6.5	3200
1000	600	8.33	5000

Table-1 shows generator voltage, current and power at different insolation. Generator parameters (V, I, P) increases at increase solar insolation. At 1000w/m^2 solar insolation generator have achieve 5kW power.

Figure 12 shows motor-pump current and torque at different insolation. In every change current and torque are overshoot at few second then stable.

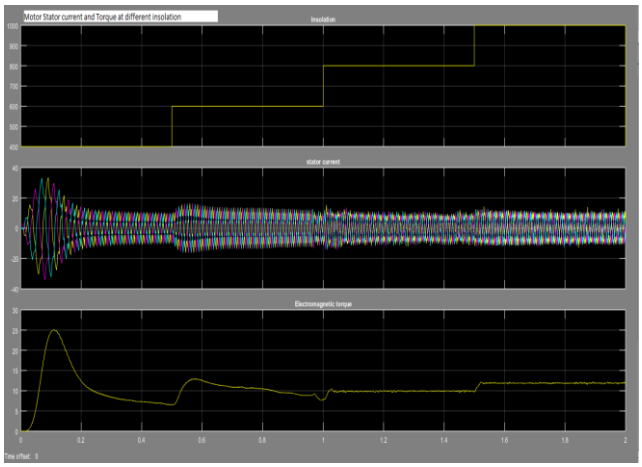

Fig.12: Torque and stator current of motor at different insolation

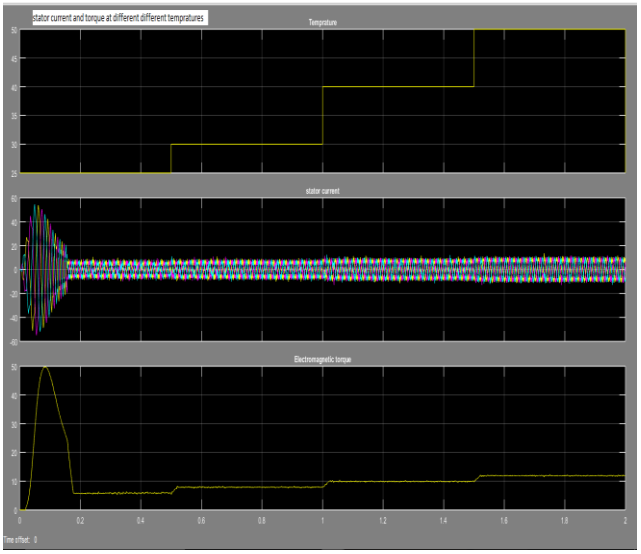

Fig. 13: Torque and current of stator at different temperature

Table-2: Motor-pump speed current and inverter voltage at different insolation

Insolation (w/m^2)	Inverter voltage (V_{rms})	RMS stator current (A)	Motor-pump speed (rpm)
400	230	6.3	1850
600	260	7.2	2100
800	300	7.9	2700
1000	420	8.8	2900

Table-2 shows details of motor-pump speed and stator current at different solar insolation. Solar insolation increases motor current and sped also increase. At 1000 w/m2 solar insolation motor-pump achieve full speed. Here the temperature is varied from 25°C to 50°C, motor-pump current and torque are increases shown in Fig. 13. Figure 14 shows the motor-pump speed at different insolation. Solar insolation is increase from 800W/m^2 to 1000W/m^2, motor speed is also increases from 2600 rpm to 2750 rpm. It is clear from the results, motor-pump speed, current and power is increase at increasing solar insolation.

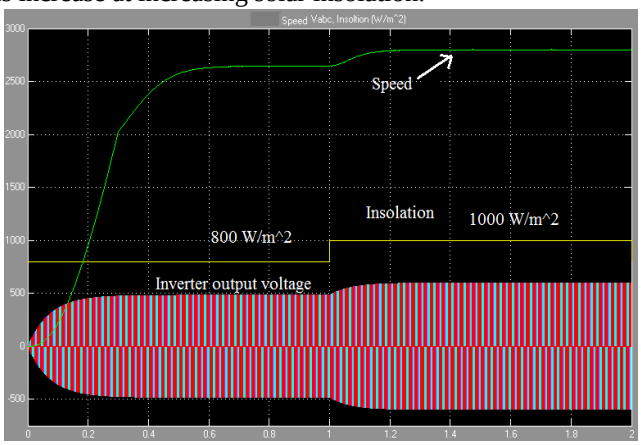

Fig. 14: solar inverter and motor-pump speed at different insolation

V. CONCLUSIONS

This paper presents mathematical modeling of solar water pumping system for irrigation using MATLAB/Simulink environment. A 5 kW PV generator is design using mathematical expression and modeling with other system components. The water pumping system has been tested at different atmospheric conditions and suitable behavior is found in steady state and dynamically conditions.

It is clear from results, that motor pump speed, current, and power also increases at increases solar insolation.

REFERENCES

1. B.H. Khan, "Non-conventional energy resources", Book, Mcgraw hill education third edition, 2018.
2. M. EL-Shimy, "Sizing optimisation of stand-alone photovoltaic generators for irrigation water pumping systems", International Journal of Sustainable Energy, Vol. 32, 201, pp. 333–350.
3. M.S. Sivangamasundari, P. Melba and V.K. Velvizhi, "Maximum Power Point Tracking for photovoltaic system by P&O method using Buck Boost Converter", International Journal of Advanced Research in Electrical, Electronics and Instrumentation Engineering, Vol. 2, 2013, pp.-9.
4. G. Biji, "Modeling and Simulation of PV Based Pumping system for Maximum Efficiency", Conference: IOSR Journal of Electrical and Electronics Engineering (IOSR-JEEE), Volume 3, Page no 5, 2016.
5. S. S. Raghuwanshi and V.Khare, "Sizing and modelling of stand-alone photovoltaic water pumping system for irrigation", Energy & Environment, Vol. 29(4), 2018, pp.- 473–491.
6. M. Dubey, S. Sharma, and R. Saxena, "Solar PV stand alone water pumping system employing PMSM Drive", Conference on Electrical and Electronics, Vol. 2, 2014, pp.- 4-9.
7. S. S. Raghuwanshi, R. Arya, "Comparison of conventional and fuzzy controller for speed control of VSI-fed induction motor-pump", 3rd International Conference on Inventive Systems and Control [ICISC], 10-11 January 2019 at JCT College of Engineering and Technology, Coimbatore, Tamil Nadu, India, 2019.
8. S. S. Raghuwanshi, R. Arya, "Reliability evaluation of stand-alone solar PV energy system for irrigation", International conference on Recent Advances in Interdisciplinary Trends in Engineering & Applications, IPS, Indore**,** SSRN-ELSEVIER, 2019.
9. M.H. Rashid, "*Power Electronics* Circuits Devices and Applications", pearson, 2017.
10. T. A. Norizan, Eslam Reda, Zambri Harun, "Enhancement of vorticity reduction by floor splitter in pump sump to improve pump efficiency", Sustainable Energy Technologies and Assessments, Vol 26, 2018, pp.- 28-36.
11. M. Boussetta, R. El Bachtiri, M. Khanfara, K. El Hammoumi, "Assessing the potential of hybrid PV–Wind systems to cover public facilities loads under different Moroccan climate conditions", Sustainable Energy Technologies and Assessments, Vol. 22, 2017, pp. 74–82.

AUTHORS PROFILE

Kunal Kenge is B. Tech. (Electrical and Electronics Engineering) student in electrical engineering department, Medi-Caps University, Indore, India.
Email- kunalkenge12345@gmail.com

Mohit Hasija is B. Tech. (Electrical and Electronics Engineering) student in electrical engineering department, Medi-Caps University, Indore, India.
Email- mohith686@gmail.com

Ruchika Tare is B. Tech. (Electrical and Electronics Engineering) student in electrical engineering department, Medi-Caps University, Indore, India.
Email- Ruchika19.tare@gmail.com

Santosh Singh Raghuwanshi is Assistant Professor in Department of Electrical Engineering, Medi-Caps University, Indore, MP, India. His current research interests include renewable energy system, power electronics application in RE, system reliability, electrical drives and environmental economics and sustainable development. He has published more than 30 scientific papers.