International Journal of Recent Technology and Engineering (IJRTE)
ISSN: 2277-3878, Volume-8 Issue-5, January 2020

Dual Motor Control using Double Zero Sequence Injection Method in Five Leg Voltage Source Inverter

Jaya prakash Sabarad, G.H. Kulkarni

***Abstract:** This paper presents in to Dual Motor Control using double zero sequence injection method in 5- leg voltage source inverter. As industry looking for reducing the semiconductor switching devices, like IGBT/MOSFET's in dual induction motor control. The main reason behind reducing the switching elements to reduce the weight, cost and size of the components. As conventional inverter require six inverter legs to control two induction motors. In this proposed work five inverter legs used instead of six legs in dual motor control. With this reduced one leg, two switching devices will be reduced and one phase of the inverter leg is common between the two motors, so called five leg inverter (FLI).*

The main switching methodology used for inverter control is Carrier based Double Zero Sequence Injection Method (DZSM). This Double Zero Sequence Injection Method applied to FLI system is having the one common leg. One of the C Phase modulation signal added to other modulating signals of all phases of other motor respectively. A subsequent each phase degree of freedom is represented by the zero-sequence signal. This paper investigates the independent speed control of dual induction motors at different speeds connected to five leg voltage source inverter system, using MATLAB/SIMULINK Software.

***Keywords:** DZSM, FLI, Induction Motor, VSI*

I. INTRODUCTION

Most of the industries are looking for multi motor control with single inverter system with precise speed control of operation. The main function of the Voltage Source Inverters (VSI) is to produce AC output voltage from DC Input voltage. The main advantage of PWM techniques are output voltage control of inverter without any additional components and lower order harmonics can be eliminated. The converters find increasing applications with high switching frequencies and which can eliminate the harmonics in the load current. In electrical machines the machine winding inductance itself acts as a filter behavior and other loads practically used to generate the harmonics. [1]- [5].

Manuscript published on January 30, 2020.
* Correspondence Author
Jaya Prakash Sabarad*, Electrical Engineering Department, VTU Belagvi, Karnataka, India. Email: jpsabarad@gmail.com
Dr.G.H Kulkarni, department, Electrical Engineering Department,, Jain College of Engineering, Belagavi,India.Email: eeejceghk@gmail.com

In this proposed work number of semiconductor switching elements reduced, thus reducing the complexity in the AC drive control. The 2-three phase induction motors are connected to FLI System. In this FLI system the one of the leg is shared between two motors that is common leg. [6]- [8]
From the analysis of dual voltage modulation (DVM) uses two consecutive switching periods, hence DC voltage restricted to half. In the modulation block method (MBM) a priori applied reference voltage knowledge of the motor to be known. In the inversion table method (IVM) requires a bigger look-up table. This makes very complicated method on implementing on digital signal process.[9]-[11] This generates side band harmonics and switching frequency increases. Hence the DZSM method seems to be good compared to other PWM methods in dual motor control. [4][7].

II. DOUBLE ZERO SEQUENCE INJECTION METHOD

Generally, three-phase AC induction motor requires a supply of variable voltage at variable frequency with fast controlling technique. The output of the inverter voltage is controlled through the modulation index of the PWM technique.

This DZSM switching technique uses the modulation signal of Phase C is added to the other modulation phase signals of the other motor. With this the six modulated signal output reduced to five modulation signal. These five modulation signal compared with the carrier based reference signal. The output of this method produces the switching pulses to five- leg VSI. [12].

The common mode voltage is computed and the common leg voltage V_c shares the voltage between two motors. The reference signal for the first and second machines are computed from the equation 1 and equation 2.

$$V_a = \left(\frac{V_{dc}}{2} * m\right) \sin wt$$
$$V_b = \left(\frac{V_{dc}}{2} * m\right) \sin\left(wt - {}^{2\pi}/_{3}\right) \qquad (1)$$
$$V_c = \left(\frac{V_{dc}}{2} * m\right) \sin\left(wt + {}^{2\pi}/_{3}\right)$$

Similarly for the second machine the reference signal is computed by

$$V_d = \left(\frac{V_{dc}}{2} * m\right) \sin wt$$

$$V_e = \left(\frac{V_{dc}}{2} * m\right) \sin\left(wt - {}^{2\pi}/_{3}\right) \qquad (2)$$

$$V_f = \left(\frac{V_{dc}}{2} * m\right) \sin\left(wt + {}^{2\pi}/_{3}\right)$$

Where,
m known as modulation index
V_{dc} is DC input voltage to inverter
V_a^*, V_b^*, V_c^*, V_d^*, V_e^* and V_f^* are the reference input voltages

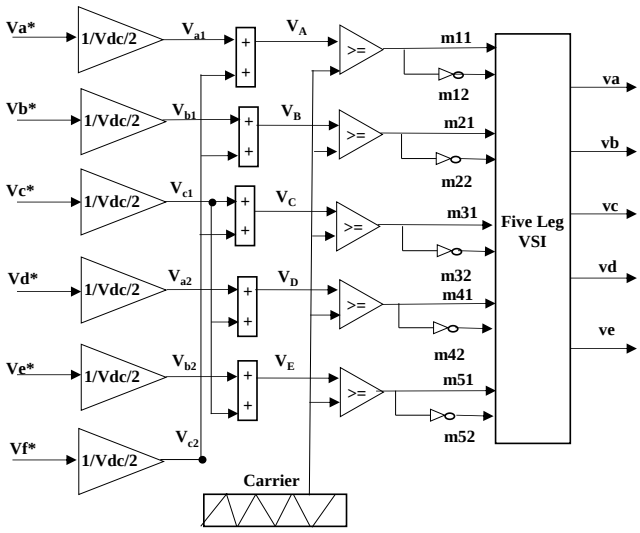

Fig. 1 Switching Technique for Carrier based DZSM

Switching technique of five leg VSI is shown in Fig 1. The 2 three-phase modulating signals are added up in such a manner that the number of switching signals gets reduced from six to five as shown in Fig 1.

The resulting five modulating signals from six modulation signals are given as in equation (3).

$$\begin{aligned} V_A(t) &= V_{a1}(t) + V_{c2}(t) \\ V_B(t) &= V_{b1}(t) + V_{c2}(t) \\ V_C(t) &= V_{c1}(t) + V_{c2}(t) \\ V_D(t) &= V_{a2}(t) + V_{c1}(t) \\ V_E(t) &= V_{b2}(t) + V_{c1}(t) \end{aligned} \qquad (3)$$

Thus the signals have no effect on reference input voltages of the induction machine, as effects are cancelled in line to line voltages of modulating signal.

Where,
m_{11}, m_{21}, m_{31}, m_{41}, and m_{51} are the switching signals for the upper 5- leg of the inverter. The m_{12}, m_{22}, m_{32}, m_{42}, m_{52}, are the switching signals for lower 5- leg of VSI.

The modulation signal m is given by,

$$m = \frac{V_{abc}}{({}^{1}/_{2}) * V_{dc}} \qquad (4)$$

V_a,V_b,V_c,V_d,V_e, are the inverter output voltages

III. FIVE - LEG INVERTER TECHNIQUE

A 5-leg VSI topology connected to a dual three phase induction motor is shown in Figure 2.

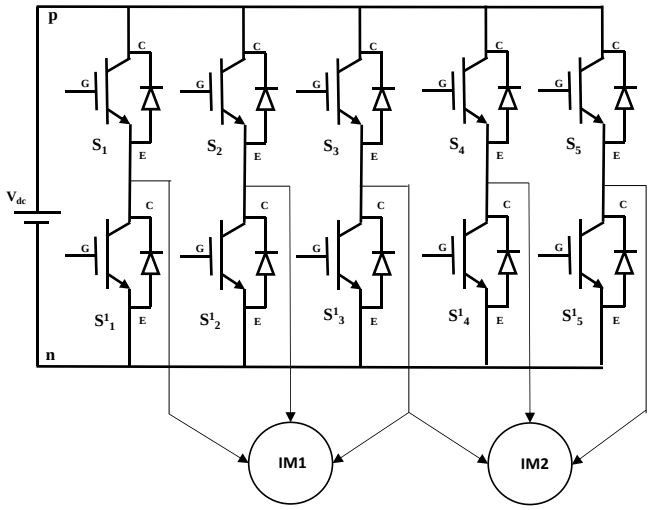

Fig.2 Five-leg VSI connected to Dual Motors

The switching pulses of carrier based DZSM fed to FLI. The output of 5-leg inverter connected to dual three phase induction motors. Input voltages as V_a,V_b,V_c fed to the first motor. The input voltages V_c,V_d,V_e fed to the second motor. In this input voltages V_c is shared between both motors. This is the important leg as its been shared between both motors and where the controlling of voltages required between both the motors fed by their respective modulation strategies.
The switching elements are connected to $+V_{dc}$ and $-V_{dc}$ of DC bus point P and point n respectively, as shown in Figure 2. Switching elements S_1, S_2, S_3, S_4, S_5, constitutes the upper leg's of FLI. Similarly $S_1^{|}$, $S_2^{|}$, $S_3^{|}$, $S_4^{|}$, $S_5^{|}$ constitutes the lower leg's of the FLI.
The induction motors IM1 and IM2 are fed to 5- Leg Inverter System. The speed of the induction motors are controlled independently.
In the above figure 2, the challenge involved in this common leg is to maintain the current carrying capacity of the inverter within limits. The switching technique is designed in effective way on common leg that current limit is maintained and is also called common mode voltage (CMV).The detailed explanation of the above PWM results obtained are in the section IV.

IV. SIMULATION RESULTS AND DISCUSSIONS

Simulation plays a very important role in the power electronic systems. Based on the simulation, the design and development of circuit configuration applied to drive control methods. The effectiveness of FLI techniques proved by running at various conditions.

simulation results computed using Matlab/Simulink. Simulated results are shown by controlling the dual induction motors as a load when applied to FLI system.
Induction Motors IM1 Ratings :
10HP (7.5KW), 400V, 50Hz, 1500rpm.
Induction Motors IM2 Ratings :
10HP (7.5KW), 400V, 50Hz, 1500rpm

The results are proved from the carrier based double zero sequence injection method applied to FLI system and results found satisfactorily. Both the motors are controlled independently and verified at rated load torque and no load torque, at different motor speeds.

No Load Torque Operation:

Fig. 3 & Fig. 4 shows the IM1 and IM2 operating at No-Load operation at the rated speed.
Fig. 5 shows the steady state operation current for IM1.
Fig. 6 and Fig. 7 shows the FLI output phase voltage and line voltage at No-Load operation.

Rated Load Torque Operation:

Fig. 8 and Fig. 11 shows the IM1 and IM2 operating speed at Rated-Load torque operation respectively. Where IM2 commanded to run half of speed for some duration and back to full speed.
Fig.9 and Fig. 12 shows 3-phase currents for IM1 and IM2 respectively
Fig.10 and Fig. 13 shows 3-phase voltage and Line voltage of FLI.

A. **FL-VSI Induction Motor Output Waveforms at No Load Operation:**

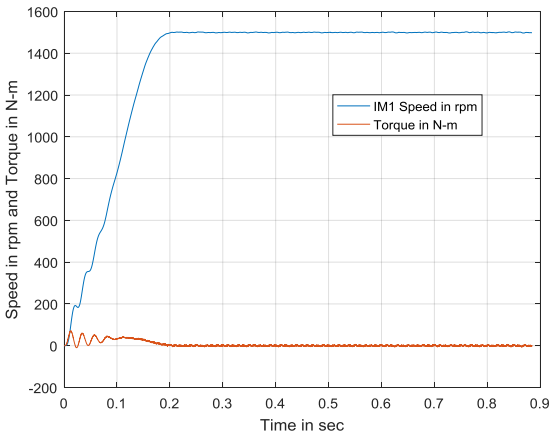

Fig.3. IM1 Speed (rpm) and Torque (N-m) at No Load

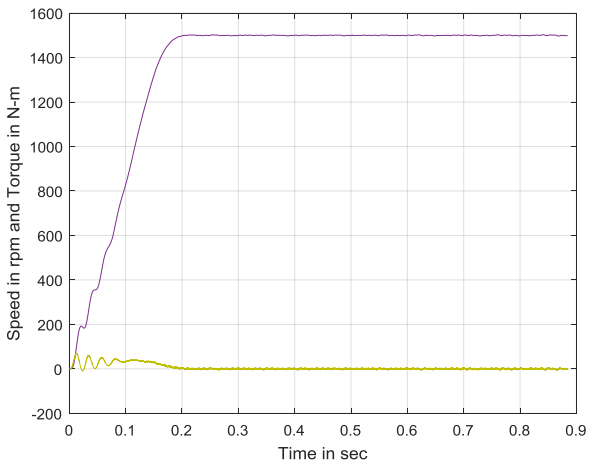

Fig.4. IM2 Speed (rpm) and Torque (N-m) at No Load

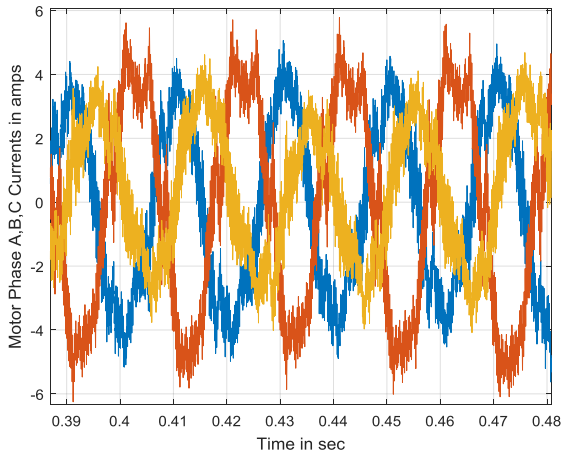

Fig.5. IM1 Three Phase Currents (amp) at No Load

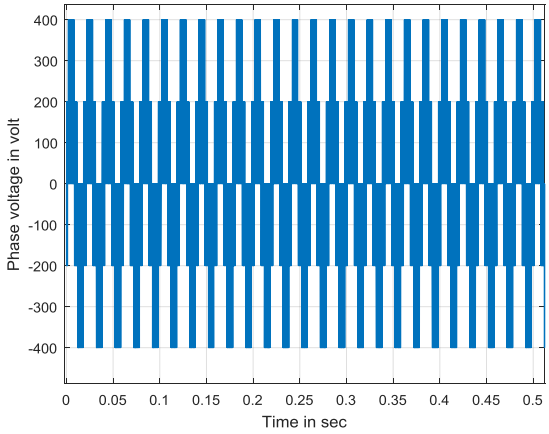

Fig.6. Five Leg Inverter output Phase voltage (volt)

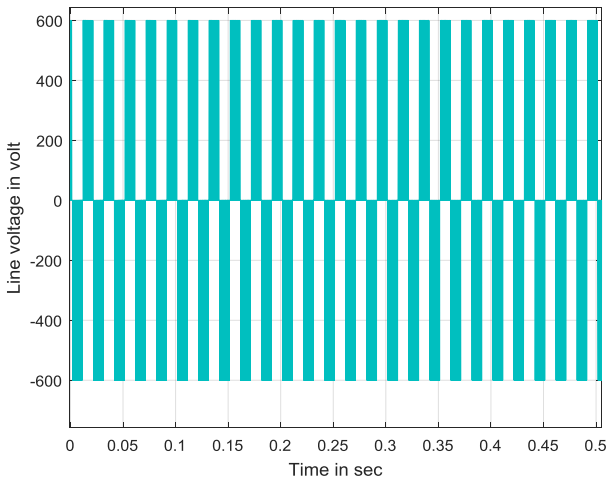

Fig.7. Five Leg Inverter output Line voltage (volt)

B. **FL-VSI Induction Motor Output Waveforms at Rated Load Operation:**

IM1 Speed, Torque, Currents and Phase Voltage

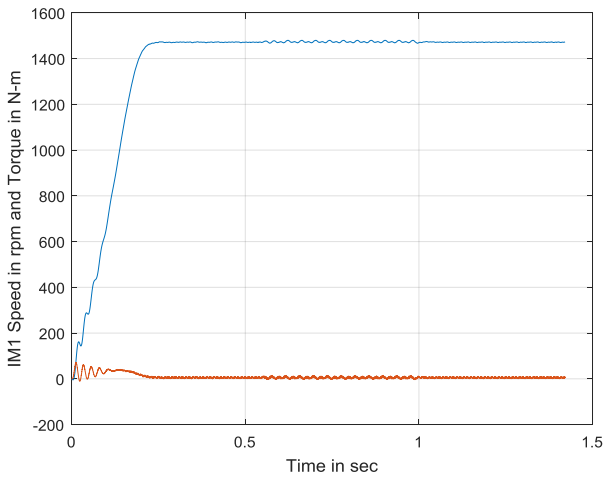

Fig.8. FLI - IM 1 Speed (1470 rpm) and Torque 5.2 N-m

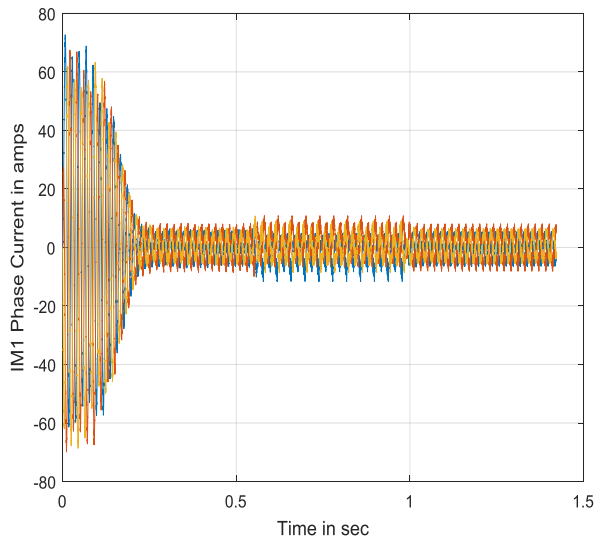

Fig.9. FLI - IM1 Three Phase Output Current (amp)

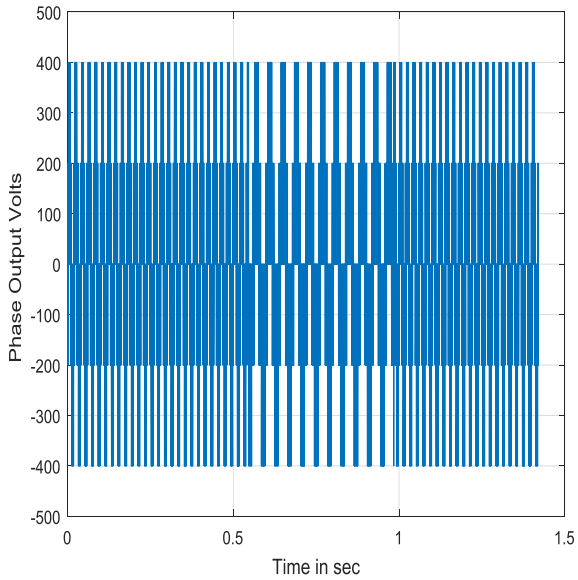

Fig.10. FLI - Three Phase Output Phase Voltage (volt)

IM2 Speed, Torque, Currents and Phase Voltage

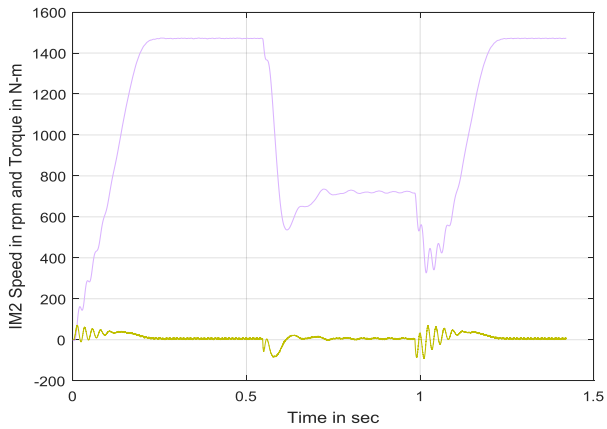

Fig.11. FLI - IM 2 Speed (1470 rpm), (720 rpm) and Torque 5.2 N-m

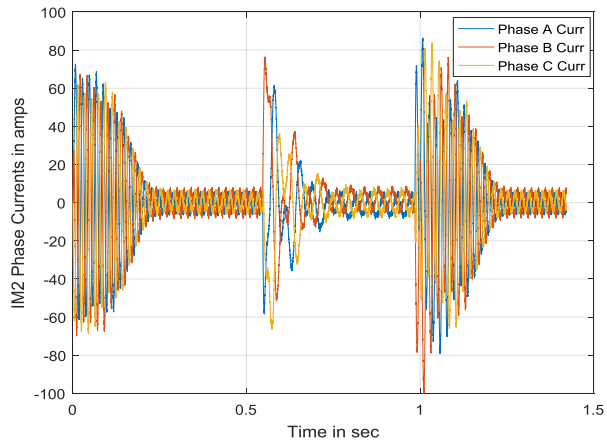

Fig.12. FLI – IM2 Three Phase Output Current (amp)

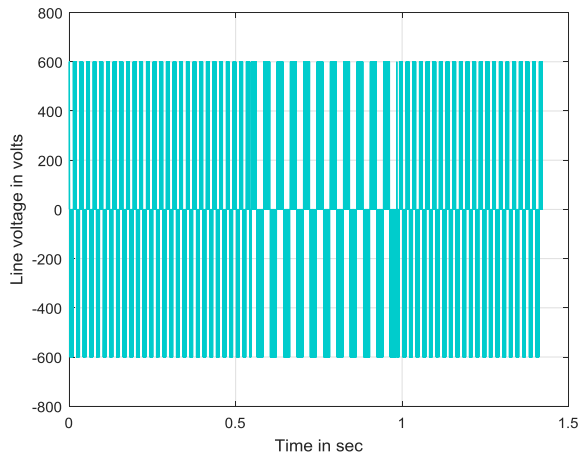

Fig.13. FLI - Three Phase Output Line Voltage (volt)

V. CONCLUSIONS

The switching technique of carrier based double zero sequence injection method is found to be the most effective technique in FLI system. This DZSM method is verified successfully on dual induction motor control, when connected to FLI-VSI system. Both dual motors are fed to common DC link voltage and independent speed control of both induction motors verified at different operating speeds with No load and rated torque values.

From this proposed technique it is found that the FLI system is found to be most cost effective, reduced complex control algorithm and used in precise speed control of dual three phase induction motors independently.

This work can be extended for AC motor drive control strategies using different PWM technique in direct and indirect torque control methods of induction motor.

REFERENCES

1. Rashid M. H, A book on "Power Electronics, Circuits, Devices, and Applications", published by PPH India pvt ltd, New-Delhi, 13th edition, 2013.
2. Bose B.K, A book on "Power electronics and Motor Drives Advances and Trends", published by Elsevier India Pvt Limited 2006.
3. Arjun Mudlapur, Raju A and Uma Rao by conference paper on "Evaluation of Different PWM Techniques for Two Level Inverter in Grid Connected WECS", IEEE Conference on ICACCI -2013, 978-1-4673-6217-7/13/$31.00 .
4. Jayaprakash Sabarad, Dr. Kulkarni G.H., and Sushma Sattigeri by "Dual Three Phase Induction Motor Control Using Five Leg Inverter", IEEE Conference paper on ICSPACE - 2017.
5. Yang Mei, Zhengxi L, Zichen Y, conference paper on "A Two-Step Model Predictive Control Strategy for Dual Induction Motor Drive System Fed by Five-leg Inverter" 18th International Conference on ICEMS -2015, October 25-28, Pattaya City, Thailand.
6. Cheng T, Dan Xiao, J. E. Fletcher, M. F. Rahman, "Carrier-Based PWM Methods With Common-Mode Voltage Reduction for Five-Phase Coupled Inductor Inverter", IEEE - Transactions on Industrial Electronics (Volume: 63 , Issue: 1 , Jan. 2016)
7. Yang Mei, Shuaiwei F. by conference paper on "An Optimized Modulation Method for a Five-LegInverter for Dual Induction Motor Drives", 8th IEEE Conference on IPEMC -2016.
8. Jayaprakash Sabarad. and Dr. G.H. Kulkarni, by "Comparative Analysis of SVPWM and SPWM Techniques for Multilevel Inverter", IEEE – ICPACE-2015 international conference.
9. Sirichai Dangeam1, Vijit Kinnares1, by "Five-leg Voltage Source Inverter for Driving Two Single-phase Induction Motors" 17th International Conference on ICEMS -2014, October. 22-25, Hangzhou, China.
10. Wei Wang, Jinghao Zhang, Ming C, by "A Dual-Level Hysteresis Current Control for One 5-Leg VSI to Control 2 PMSMs" Transaction on IEEE Power Electronics (Volume: 32 , Issue: 1 , Jan. 2017)
11. Masaya Iwashita, Matsuse K, Suzuki Y, Rajashekara K, by "Chatacteristics of speed control of two induction motors fed by a five-leg inverter", 2013 IEEE. 978-1-4799-0336-8/13/$31.00.
12. M.Sowmiya, Renukadevi G, Dr.Rajambal K, by "IFOC of Five-Phase Induction Motor Drive", International Conference ICPEC -2013 on Power, Energy and Control.

AUTHORS PROFILE

Jaya prakash Sabarad, He obtained Bachelor of Engineering in Electrical and Electronics Engineering in year 2002 from V.T.U. Belagavi, India and M.Tech. in Power and Energy Systems in year 2006 from NITK Surathkal, India. Presently he is Research Scholar in the Department of Electrical Engineering at V.T.U. Belagavi, India. His research interests include Drives Control System and Power Electronics. Email: jpsabaradad@gmail.com

G.H.Kulkarni, He received the Bachelor of Engineering in Electrical Engineering in year 1985 from Karnataka University, Dharwad, India. Master of Technology in year 1992 in the domain of Power Systems from University of Mysore, Karnataka, India and Ph.D. in ANN Applications to Power System from J.N.T.U. Hyderabad, India in 2007. Presently he is working as a HOD of Electrical and Electronics Engineering at Jain College of Engineering Belagavi, India. His areas of interest include ANN application to Power System. Email: eeejceghk@gmail.com