International Journal of Recent Technology and Engineering (IJRTE)
ISSN: 2277-3878, Volume-8 Issue-5, January 2020

Design and Implementation of Active Power Filter for Harmonics Elimination using Intelligent Control Controller

Madan Vasuniya, Manish Sahajwani

Abstract: ***Non-linear loads generate harmonic current in power system. These harmonics currents can produce various type of effect that is harmful to the power system. A system required to filter out these harmonics. Design and assessment of shunt active power filter (SAPF) for harmonics elimination using intelligent control controller (fuzzy logic) present in this paper. Generally, conventional phase-locked loop (PLL) technique are used for eliminate harmonics. In PLL technique based system contains more harmonic. This paper compared without filter versus with filter at different loads. Results shows that intelligent control controller based system contain minimum harmonic contain as compared to conventional controller.***

Keywords**:** ***fuzzy logic, SAPF, THD, harmonics, PLL***

I. INTRODUCTION

In AC power distribution systems, the occurrence of harmonics takes place by distortion of normal electric current waveforms by means of non-linear loads. A linear load is defined as voltage (sine wave) applicable along the constant resistance that results in current. The irregularity in the resistance is primary source of non-linear loads [1]. These pulses results in harmonic current waveforms in parallel to original current waveform. The harmonic signals cancel each other in a three phase system; hence only odd harmonics are present [2]. When each phase carries current of equal amount in a balanced distribution scenario, the current waves with opposite polarity cancel out each other [3].

Harmonic currents and voltage have generated, if load is non-linear in the utility grid. For eliminate harmonics, active and passive filters are used. The active power filters are conventionally used to eliminate harmonics. Passive filters use passive elements resistor, inductor and capacitor [4]. A combination of passive elements is tuned to the harmonics frequency that is to be filters. SAPF filters supplies the capacitive reactive power to power system at the fundamental frequency. SAPF are invariable used in power system to reduce harmonics current, voltages to adequate amount [5].

The PI controllers turns on when linear model is precise, which are complicated and fall out under nonlinearity. The number of authors have been used artificial intelligent technique (fuzzy logic controller (FLC), neural network, hybrid controller etc.) based system and compared with convention PI controller. FLC have number of advantages as compared convention controller i.e. no mathematical modeling required, handle lion-linear etc. [7].

The active power filters are conventionally used to balance the harmonic current by injecting the sinusoidal grid current. The scheme is efficient to simulate the harmonic current but renders un-useful for harmonic voltage problems [8]. The time domain compensative provides quick reaction, less computation burden and fast response in comparison with frequency domain [9].

This paper presents modeling of SAPF using FLC. This paper also present harmonic reduction of SAPF system.

II. PROPOSED METHODOLOGY

A. Shunt Active Power Filter

For eliminating voltage and current harmonics of the system, SAPF are comparatively new mechanism. It is depend on power electronics based devices i.e. converter, switching devices, inverter. The main advantage of the SAPF, it is work independently and tackles at a time more than one harmonic. This is particularly used for huge and deform loads [10].

Figure 1 illustrates the SAPF concept. An electronic controller, to sense load current or voltage and make it to be sinusoidal. In this figure, inductor is used for injecting current and capacitor is used for storing voltage [11].

If the load current is imprecise due to non-linear load, these currents is sense and tackle by SAPF and make sinusoidal. This is fed to the system by using power electronic system.

Manuscript published on January 30, 2020.
* Correspondence Author
Madan Vasuniya*, M.Tech Scholar, Electrical Engineering Department IPS, Indore, India, madansv76@gmail.com
Manish Sahajwani, Electrical Engineering Department IPS, Indore, India, msahajwanister@gmail.com

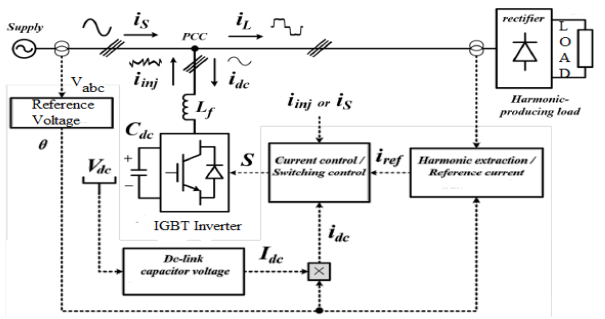

Fig. 1: Shunt Power Filter topology [12]

B. Evaluation of System Source Current

From Fig. 1, the instant current is as follows [13-14]:

$$i_s(t) = i_l(t) - i_{dc}(t) \quad (1)$$

Source instant voltage is given by:

$$v_s(t) = v_m sin\omega t \quad (2)$$

At nonlinear load, the load current contain fundamental component and harmonic components is as follows [14]:

$$i_L(t) = \sum_{n=1}^{\infty} \sin(n\omega t + \phi_n)\, I_1 \sin(n\omega t + \phi_n) + \sum_{n=2}^{\infty} \sin(n\omega t + \phi_n) \quad (3)$$

The instant power is as follows [14]:

$$P(t) = v_s(t) * i_l(t) = V_m I_1 sin^2\omega t * V_m I_1 sin\omega t * cos\omega t * sin\phi_1 + V_m sin\omega t * \sum_{n=2}^{\infty} I_n \sin(n\omega t + \phi_n) \quad (4)$$

$$= P_f(t) + P_r(t) + P_h(t) \quad (5)$$

From equation (4), fundamental power of the load is:

$$p(t) = V_m I_1 sin^2\omega t * cos\phi_1 = v_s(t) * i_s(t) \quad (6)$$

The equation of source current is [14-15]:

$$i_s(t) = \frac{P_f(t)}{v_s(t)} = I_1 cos\phi_1 sin\omega t = I_m sin\omega t \quad (7)$$

Where $I_{sm} = I_1 cos\phi_1$

PWM converter has some switching losses, maximum current of the station to supply is the sum of converter switching losses and load power. Peak current is as follows:

$$I_{sp} = I_{sm} + I_{sl} \quad (8)$$

So required compensation current for active filter. The compensation current is as follows:

$$i_c(t) = i_L(t) - i_s(t) \quad (9)$$

C. *Design of PWM Converter (K_c) Transfer Function and Dc Side Capacitor (C_{dc})*

Capacitor is reducing ripple voltage. The DC side capacitor is as follows [15-16]:

$$C_{dc} = (\pi * I_{c1,rated})/(\sqrt{3}\omega V_{dcp-p(max)}) \quad (10)$$

Where, $V_{dcp-p(\max)}$ is voltage ripple (peak to peak) and $I_{c1,rated}$ is rated filter current

The PWM converter (K_C) transfer function is the ratio of input voltage (V_{dc}) to output capacitive current (I_c) [15-16]:

$$K_c = \frac{V_{dc}}{I_c} \quad (11)$$

D. *Fuzzy Logic Controller*

Figure 2 illustrated of fuzzy logic controller model. The FLC system follows some steps. First step is to compare reference voltage to DC side capacitor voltage. This difference is called error.

The error is as follows [4-5]:

$$e = \left(V_{dc_{ref}} - V_{dc_{act}}\right) \quad (12)$$

Second step is to obtain change of error signal by using this equation

$$ce(n) = e(n) - e(n-1) \quad (13)$$

Where n is sampling instant.

The output of FLC is generating the reference current $(i_{sa}^*, i_{sb}^*, and\ i_{sc}^*)$ [4-5].

Final step is to compare reference current to source currents $(i_{sa}, i_{sb}, and\ i_{sc})$. The switching gate pulse are obtained and fed to PWM converter [4-6].

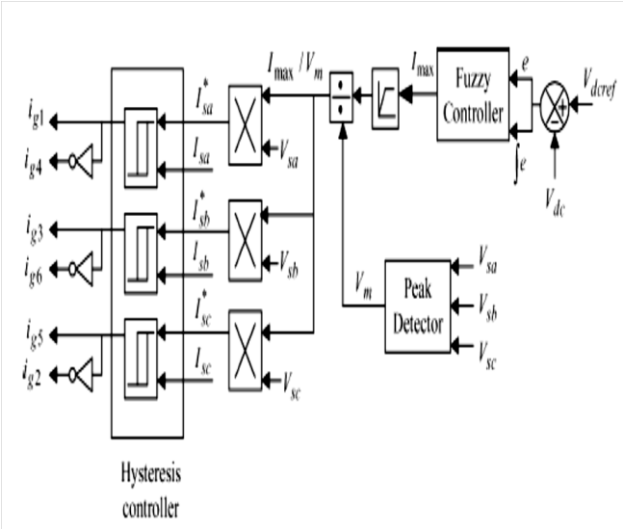

Fig. 2: Fuzzy control scheme [17]

III. PHASE-LOCKED LOOP (PLL) APPROACH

PLL is a conventional technique that successfully performs different utility conditions. Figure 3 shows PLL approach. Three phase source voltage abc transformed into two phase $\alpha\beta$ by using Clarke-transformation shown in eq. (15). Two phase $\alpha\beta$ is transformed revolving reference frame dq shown in eq. (16) by using Park-transformation. A proportional-integral (PI) controller is used for manipulated q variables and generated angular frequency. Angle θ is generated by using angular frequency [18].

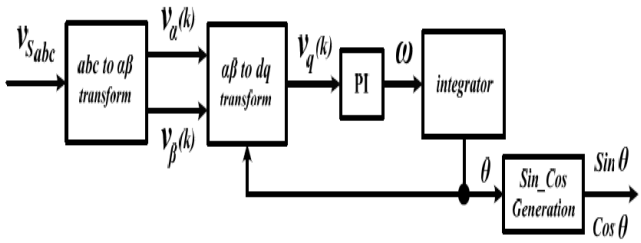

Fig.3: PLL technique [17]

Three phase voltage abc transformed into two phase $\alpha\beta$ [18]

$$\begin{bmatrix} v_\alpha(k) \\ v_\beta(k) \end{bmatrix} = \sqrt{\frac{2}{3}} \begin{bmatrix} 1 & \frac{-1}{2} & \frac{-1}{2} \\ 1 & \frac{\sqrt{3}}{2} & \frac{-\sqrt{3}}{2} \end{bmatrix} \begin{bmatrix} v_{Sa}(k) \\ v_{Sb}(k) \\ v_{Sc}(k) \end{bmatrix} \quad (14)$$

Two phase $\alpha\beta$ is transformed dq [17]

$$\begin{bmatrix} v_d(k) \\ v_q(k) \end{bmatrix} = \begin{bmatrix} cos\theta & sin\theta \\ -sin\theta & cos\theta \end{bmatrix} \begin{bmatrix} v_\alpha(k) \\ v_\beta(k) \end{bmatrix} \quad (15)$$

Retrieval Number: E6416018520 /2020©BEIESP
DOI:10.35940/ijrte.E6416.018520
Journal Website: www.ijrte.org

Published By:
Blue Eyes Intelligence Engineering
& Sciences Publication

IV. SIMULATION RESULTS

The complete SAPF model using Matlab/simulink environment is shown in Fig. 4. Figure 4 divided in two part first shows system without filter and second is with shunt filter. Figure 5 shows system voltage and current without filter. It is containing more ripples. Figure 6 shows that the more harmonic contain available without filtering system. THD is 30.04%.

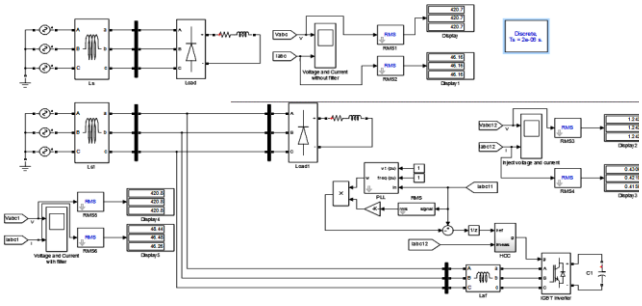

Fig. 4: SAPF simulink model

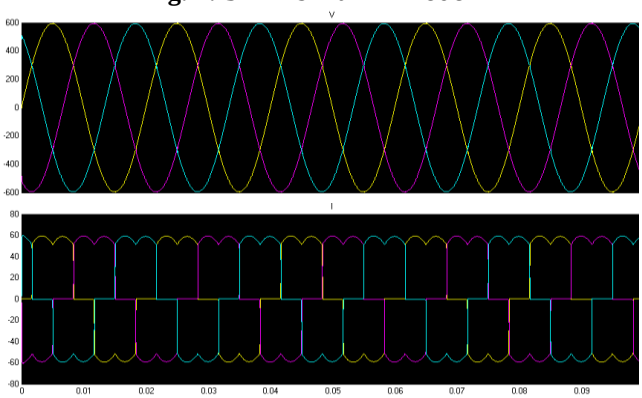

Fig. 5: voltage and current waveform without filter

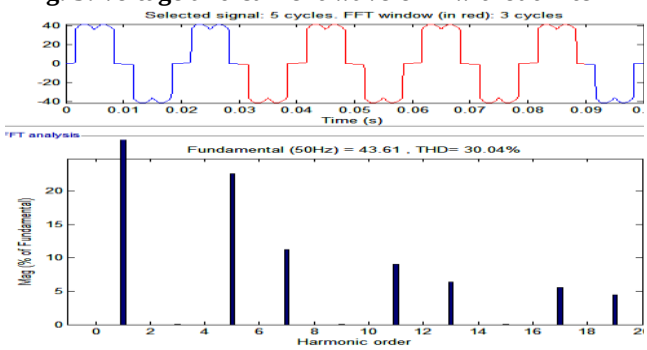

Fig. 6: System THD without filter

Figure 7 shows that system voltage and current with SAPF. Results show that ripples are reduces and system voltage and current are continue. System harmonics are reducing as compare to without filtering system. Figure 8 shows system THD with SAPF. The THD is 4.42%.

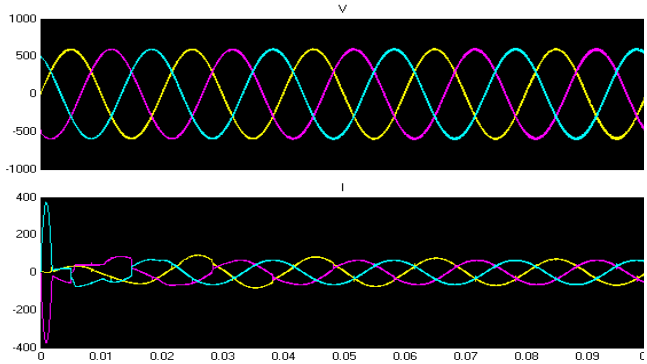

Fig. 7: System output voltage and current with SAPF

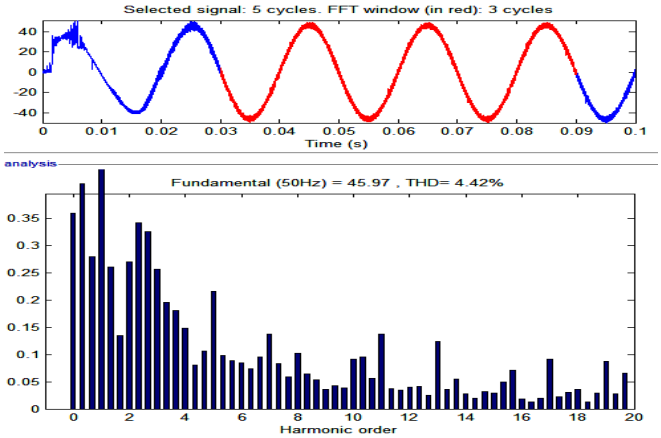

Fig. 8: System THD with filter

Figure 9 shows FLC based SAPF model using Matlab/simulink. Results shows that system current is ripple free and continues. Figure 10 shows that fuzzy logic based system is less harmonic contain as compare to other system. Figure 11 shows FLC based system THD with SAPF. THD of the system is only 4.14%.

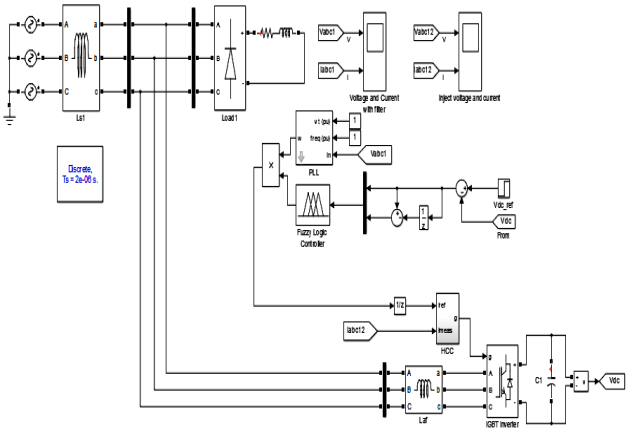

Fig. 9: Simulink model for SAPF filter with FLC

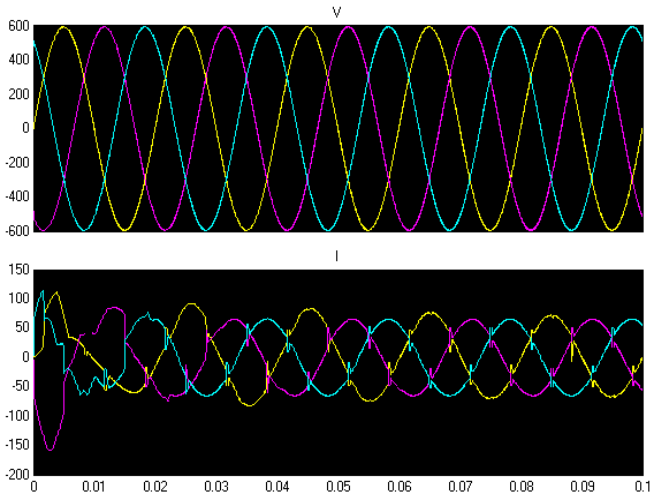

Fig.10: System output voltage and current using FLC

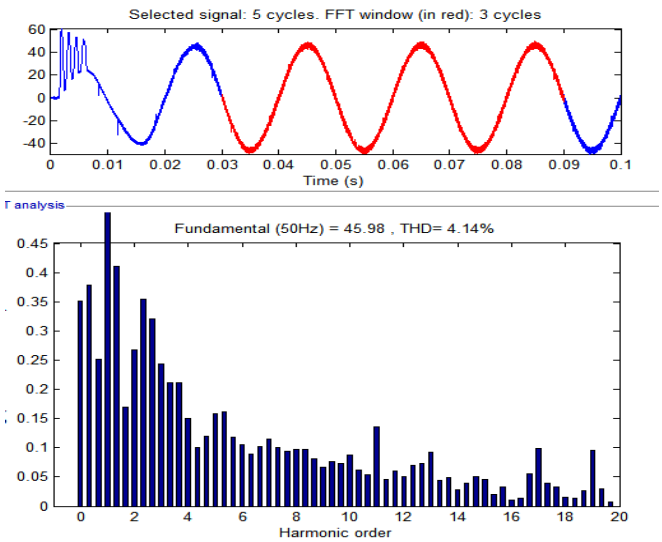

Fig.11: System THD using FLC

Table-1: Current THD with and without filter at different load

Load	Without filter THD (%)	THD with PLL technique (%)	THD with fuzzy logic (%)
R	30.04	4.42	4.14
RL	30.14	5.19	4.97
RC	30.32	6.66	6.15
RLC	30.31	7.59	6.98

Table-1 shows various (without filter, with filter and FLC) SAPF based source current THD at different load (R, RL, RC and RLC). In resistive load THD are 30.04%, 4.42% and 4.14% at without filter, with filter and FLC respectively. In RLC load THD is higher than the others load. In RC load THD is greater than the R and RL load. Table-1 also shows that in FLC, source current THD is minimum as compared to without filter. FLC and PI (PLL) controller based system are minimizing harmonic content.

It is clear from the above results, without filter system are contain more ripples and harmonic. SAPF based system is less harmonic and ripples as compare to without filter. Fuzzy logic system is fewer ripples and harmonic contain as compare the both system.

V. CONCLUSION

This paper present, PLL and FLC based SAPF to compensate harmonics at non-linear load. Simulation results and model of shunt active filter with and without fuzzy controller are shown. Results show that without filter system are contain more ripples and harmonic. SAPF based system is less harmonic and ripples as compare to without filter. Fuzzy logic system is fewer ripples and harmonic contain as compare the both system. The power quality of the overall system is enhanced using intelligent control controller.

Modelling and further verification can lead to the generation of new approach a step further in this work.

REFERENCE

1. S. Kumar and R. Thakur, "Modeling and Validation of Shunt Active Power Filter by Using OPAL-RT", International Conference on Advanced Informatics for Computing Research, ICAICR 2018, pp. 106-116.
2. R. Balasubramanian, K. Parkavikathirvelu, R. Sankaran and R. Amirtharajan, "Design, Simulation and Hardware Implementation of Shunt Hybrid Compensator Using Synchronous Rotating Reference Frame (SRRF)-Based Control Technique", Electronics 2019, 8, 42; doi:10.3390/electronics8010042.
3. R.C. Dugan, M.F. Mcgranaghan, S. Santoso, H.W. Beaty, "Electrical power system quality", TMH education pvt. Ltd. 2008.
4. Li, S.; Liang, X.; Fei, J. Dynamic surface adaptive fuzzy control of three-phase active power filter. IEEE Access. 2016, 4, pp. 9451–9458.
5. S. Hou, J. Fei, Y. Chu, C. Chen, "Experimental investigation of adaptive fuzzy global sliding mode control of single-phase shunt active power filters" , IEEE Access. 2019, 7, pp. 64442–64449.
6. R. M. Duke and S. D. Round, "The steady state performance of a controlled current active filter," IEEE Transactions on Power Electronics, vol. 8, Apr. 1993, pp. 140–146.
7. S. Bosch, J. Staiger, H. Steinhart, "Predictive current control for an active power filter with LCL-filter", IEEE Trans. Ind. Electron. 2018, 65, pp. 4943–4952
8. E.H. Watanbe, R. M. Stephan & M. Aredes, "New concepts of instantaneous active and reactive powers in electrical systems with generic loads," IEEE Transactions on Power Delivery, vol.8, no.2, 1993, pp.697-703.
9. K. Chatterjee, B. G. Fernandes, and G. K. Dubey, "An instantaneous reactive volt-ampere compensator and harmonic suppressor system," IEEE Transactions on Power Electronics, vol. 14, no. 2, Mar. 1999, pp. 381–392.
10. R. Kanagavel, I. Vairavasundaram, S. K. Padmanaban, "Design and prototyping of single-phase shunt active power filter for harmonics elimination using model predictive current control", Electrical Engineering System, https://doi.org/10.1002/2050-7038.12231.
11. J. Afonso "Shunt Active Filter for Power Quality Improvement", International Conference UIE 2000 – "Electricity for a Sustainable Urban Development" Lisboa, Portugal, 1-4 November 2000, pp. 683-691.
12. Y. Hoon, Md. Amran Md Radzi, Md Ammirrul A. Md Zainuri, and Md Adzhar, Md Zawawi, "Shunt Active Power Filter: A Review on Phase Synchronization Control Techniques", Electronics 2019, 8, 791; doi:10.3390/electronics8070791
13. P. Sathvik, A.Srinivasa Reddy, B.Sambasiva Rao, "Simulation of Shunt Active Power Filter with Pi and Fuzzy Logic Controller", International Journal of Engineering and Advanced Technology , Vol. 7, Issue 2, 2017.
14. S. Golestan, J.M.Ge, J. Vasquez, A.M. Abusorrah, Y.A. Al-Turki, "Modeling, Tuning, and Performance Comparison of Second–Order-Generalized-Integrator–Based FLLs", IEEE Trans. Power Electron. 33, 2018, pp. 10229–10239.
15. Y. Terriche, S. Golestan, J.M. Guerrero, D. Kerdoune, J.C. Vasquez, "Matrix pencil method-based reference current generation for shunt active power filters", IET Power Electron., 11, 2018, pp. 772–780.
16. Y. Hoon, M.A.M. Radzi, M.K. Hassan, N.F. Mailah, "Operation of three-level inverter-based shunt active power filter under non-ideal grid voltage conditions with dual fundamental component extraction", IEEE Trans. Power Electron. 33, 2018, pp. 7558–7570.
17. W.U.K. Tareen and S. Mekhilef, "Three-phase transformerless shunt active power filter with reduced switch count for harmonic compensation in grid-connected applications", IEEE Trans. Power Electron., 33, 2018, pp. 4868–4881.
18. R.S. Vedam. and M.S. Sarma, "Power quality VAR compensation in power system", CRC press, 2013.

AUTHORS PROFILE

Madan Vasuniya is M.Tech Scholar in electrical engineering department, ies, ips college indore, india. He receives bachelor of engineering (electrical engg) in 2003. His current research interests are power system, filters design and power electronics.

Manish Sahajwani working as associate professor in the department electrical and electronics engineering at IES, IPS Indore. His specializations include electrical machines, power system, energy and digital communication. His current research interests are filters, energy, communication.