International Journal of Recent Technology and Engineering (IJRTE)
ISSN: 2277-3878, Volume-8 Issue-5, January 2020

Optimum Power Flow and Optimum Placement of Unified Power Flow Controller (UPFC) using Optimization Techniques

Vireshkumar Mathad, Gururaj Kulkarni

Abstract*: This paper presents the Optimum Power Flow (OPF) and Optimum placement of UPFC using optimization techniques, Particle Swarm Optimization (PSO) and Cuckoo Search (CS) Algorithm. The IEEE 30 bus system is used as a test system and performance of PSO and CS algorithm evaluated with and without UPFC on test system. The optimum placement of UPFC is carried out using OPF. Further it is seen that by using CS algorithm transmission loss, generation cost are minimized compared to PSO algorithm. The optimum placement of UPFC improves the voltage profile of test bus system.

Keywords: ***Cucoo Search (CS) Algorithm, FACTS, Optimal Power Flow (OPF), Particla Swarm Optimization (PSO) Algorithm, UPFC***

I. INTRODUCTION

With an increase in power demand and restriction in transmission line expansion causes overloading of the transmission lines. Flexible Alternating Current Transmission System (FACTS) technology plays an significant role in power flow control of power system and increases the transmission line capacity to its thermal loading capacity [1-2]. To control power system parameters such as series and shunt impedance, voltage, current, rotor angle stability and phase angle FACTS devices incorporates the Power Electronics equipped controllers to control power flow in transmission line and further increases system stability. UPFC is combined (series and shunt) controller FACTS device and it is most versatile because it has ability to control real and reactive power simultaneously or selectively [1]. In present power system for transmission line planner's optimum power flow and optimum placement of UPFC is important which enhance the capacity of existing lines. Different methods are used in power system operation and control to various applications, such as analytical method, nonlinear programming and optimization techniques. There are different optimization techniques to solve optimization problem such as Genetic Algorithm (GA), Ant Colony Optimization (ACO), PSO and CS algorithm etc[3,4]. CS algorithm is new optimization technique inspired by bird called cuckoo [3].

Manuscript published on January 30, 2020.
* Correspondence Author
Vireshkumar Mathad*, E & E department, Jain College of Engineering, Belagavi, India. Email: vireshmathad@gmail.com
Gururaj Kulkarni, E & E department, Jain College of Engineering, Belagavi, India. Email: gururajkulkarni1@rediffmail.com

II. UNIFIED POWER FLOW CONTROLLER

Among the different FACTS devices, UPFC is versatile device because of its capability to absorbing and supplying of real and reactive power. UPFC consist of two converters, AC to DC converters (VSC_2) and DC to AC converters (VSC_1) as shown in Fig. 1. VSC_2 converter is connected in parallel with transmission line via shunt transformer and VSC_1 converter is connected to a transmission line in series via series transformer in a transmission line. VSC_2 and VSC_1 connected back to back with a common DC link. The series and shunt control structure measures the measured values, compares with reference signal and generates the gate signal to VSC_1 and VSC_2 respectively. The main objective of converter VSC_2 is to supply or absorbs real power required by the converter VSC_1 through DC link. VSC_1 injects voltage V_{pq} with controlled magnitude and phase angle[1,5-7].

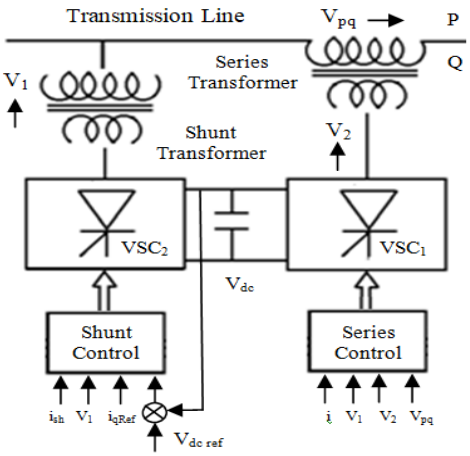

Fig.1. Block diagram of UPFC.

III. MATHEMATICAL MODELS

A. Optimal Power Flow

In present Power System increase in power demand puts various challenges to power system planners to utilize existing resources, in this Optimal Power Flow (OPF) plays a significant rule.

Equation of optimal power flow is taken as the fuel cost and one equality constraints are used for getting the performance of the algorithm. Simultaneously Transmission loss and cost of UPFC also considered.

The objective function is given by equation 1,

Minimize,

$$F_{costi}(P_{gi}) = a*\sum(xP_{gi}^2 + yP_{gi} + z) + b*P_{loss} + c*UPFC_{cost} \quad (1)$$

Where i : 1,2,3…N

P_{gi} : Generated power at generator bus i.

x, y, z : Cost coefficients.

a,b, c : Multi objective weight values.

$F_{costi}(P_{gi})$: Total fuel cost.

$UPFC_{cost}$: Cost of UPFC.

In-Equality Constraint,

$$V_{i\,min} < V_i < V_{i\,max} \quad (2)$$

$V_{i\,min}$: Minimum voltage, which should be maintained at each bus (0.9 p.u)

$V_{i\,max}$: Maximum voltage, which should be maintained at each bus (1.1 p.u)

Equality Constraint.

$$P_{load} + P_{loss} + \sum P_g \quad (3)$$

Where i = 1,2,3…N

P_{load} : Total Demand in entire power system (summation of total demand)

P_{loss} : Total line loss in entire power system

P_{gi} : Total sum of generation

The equation 1 is objective function, which should minimize the fuel cost in constraint with voltage and power given in equation 2 and 3. The equation 1 is objective function, which should minimize the fuel cost in constraint with voltage and power given in equation 2 and 3.

B. UPFC Model

FACTS devices mainly used to minimize the various steady state control problem of power system. Literature revels that FACTS devices can improve the loading capacity of a transmission line. UPFC is a combination two FACTS devices, namely Thyristor Controlled Series Capacitor (TCSC) and Static Var Compensator (SVC). TCSC is connected in series (VSC_1) and SVC is connected in parallel (VSC_2) as shown in Fig. 1.

The value of reactance is the function of reactance of the line where the TCSC is placed. The transmission line impedance of is given by [14],

$$Z_{ij} = Z_L + jX_{TCSC} \quad (4)$$

$$X_{TCSC} = r_{TCSC} X_L \quad (5)$$

Where,

Z_L : Transmission line impedence

X_{TCSC}: Transmission line reactance (where TCSC is located)

r_{TCSC} : Compensation degree of TCSC (Coefficient)

SVC of a UPFC can be operated in both inductive and capacitive mode hence it controls bus voltage by absorbing or injecting reactive power. A shunt variable susceptance is connected at both ends of the transmission line for model the SVC.

The injected reactive power at bus i^{th} is

$$\Delta Q_{is} = Q_{svc} \quad (6)$$

Q_{SVC}: Reactive power injected by SVC (MVAR)

$$Q_{svc} = Q_{Min} \sim Q_{Max} \quad (7)$$

The limits for reactance and reactive power of UPFC are,

X_{TCSC} = -0.8 X_L to 0.8 X_L

Q_{SVC} = -100 MVAR to 100 MVAR

OPF objective function is used to place UPFC optimally in test system using PSO and CS algorithm. UPFC is placed in the weakest bus of test system and heavy loaded areas with meeting all the constraints. The power flow in a transmission lines can be controlled varying magnitude and angle of the series injected voltage of UPFC by capacitive and inductive mode. control strategies can be given as,

Capacitive mode

$$|V_{Se}| = 0.09,\ \alpha = -90^0,\ I_S = 0.9 \quad (8)$$

Reactive mode

$$|V_{Se}| = 0.09,\ \alpha = +90^0,\ I_S = 0.1 \quad (9)$$

C. Practical Swarm Optimization (PSO)

Optimization is a process which improves the output, in such a way that adjusting the input. The input may be objective function, process or variable etc. There are different optimization techniques available but PSO algorithm which has flexibility, enhances the search capability and overcomes the convergence problem. PSO algorithm originally based on the behavior of organisms (Particle) like ant, bird or fish etc. which are searching for the food. If any of the particle finds the path for food rest of the particles will fallow same path. Its first concept, introduced by Kennedy and Eberhart, in 1995[8]. Each particle of PSO algorithm are characterized by two parameters position and a velocity. Proposed PSO algorithm parameters are used to find objective function, shown in Table I. The general principles for the PSO algorithm are stated below[8].

Step 1: Chose the number of particles as 8 i.e. 1 to 6 particles are values of 6 generators of IEEE 30 bus system, 7 particle is MVAR value of UPFC and 8 particle is reactance (X) value of TCSC

Step 2: The initial population is chosen randomly close to 8 particle data.

Step 3: Set the initial velocity as zero denoted by $V_j(i)$, increase the step count with iteration number as i=1 and find velocity of particles.

Step 4: Convenience particle position of j denoted by $X_j(i)$

Step 5: In the ith iteration find the P_{best} and G_{best} value (P_{best} and G_{best} values are Generators and UPFC data), identify the velocity for the particles close to C_1 and C_2 as 2 by following,

$$V_j(i) = V_j(i-1) + C_1 r_1 [P_{best\,j} - X_j(i-1)] + C_2 2 [G_{best} - X_j(i-1)] \quad (10)$$

Where j :1 to 8 (Particles) and i= iteration count,
C_1 & C_2 : Individual (cognitive) & group (Social) learning rates respectively.

- Find the position of the jth particle in the ith iteration by following,

$$X_j(i) = X_j(i-1) + V_j(i) \quad (11)$$

where j = 1 to 8

- Evaluate the new $X_j(i)$ with fitness function of $F_{costi}(P_{gi})$ using optimal load flow analysis check voltage constraint and power flow constraint.
-

Step 6: Check convergence of solution, if not go to step 5 update iteration number i = i + 1 find new P_{best} and G_{best} till optimum solution.

Table 1: Data used for PSO algorithm.

S. No.	Parameters	Used
1	Population size	24
2	Epochs	500
3	Number of variables	8
4	Acceleration constant C1	2
5	Acceleration constant C2	2
6	Initial inertia weight	0.9
7	Final inertia weight	0.4

D.Cuckoo Search (CS)

For optimum location of UPFC considering objective function CS algorithm is used which is inspired by a bird called Cockoo. Initially cuckoo lays some eggs in nests, in which some eggs grow up and matured. The eggs which are not matured are detected by host bird and killed. The general principles for the CS algorithm are stated in following steps [3].

Step 1: Begin objective function by equation 1

Step 2: Generate initial population 'n' host nests
[Generate initial population of 'n' host consist of x_i = (1…n) values i.e. n=8. Which is combination of 6 Generators of IEEE 30 bus system and MVAR, reactance (X) of UPFC data.]

Step 3: While (t< maximum generation)
Get a cuckoo randomly by Levy Flights evaluate its quality/fitness function.
[Here 't' is nothing but initial iteration count and maximum generation is number of iteration count.]
Chose a nest among n randomly

If ($F_i > F_j$), replace j by the new solution
End
(Chose a nest means set of 8 initial values and named as F_i, Selected random nest is evaluated by objective function and it is named as F_j. If F_i is greater than the F_i replace F_j by new solution that is G_{best} Value)

Step 4: A fraction (p_a) of worse nests are abandoned and new ones are built.
(fraction (p_a) is nothing but probability index of worst nest means where the cost is high. Abandoned and new one are built by Levy Flights by the equation

$$x_i^{t+1} = x_i^t + \alpha \oplus \text{levy}(\lambda) \quad (12)$$

Where α is step size and λ can be chosen any value more than zero)

Step 5: Rank the solution and find the current best value, do it till the while loop get executed.

Table 2: Data used for CS algorithm.

S. No.	CSA parameters	Used
1	Population size	40
2	Epochs	500
3	Number of variables	8
4	Fraction Pa	0.25
5	Step size (α)	0.5

IV. RESULT AND DISCUSSION

Simulations PSA and CS algorithm on IEEE 30 bus test system have been carried out for with and without UPFC.

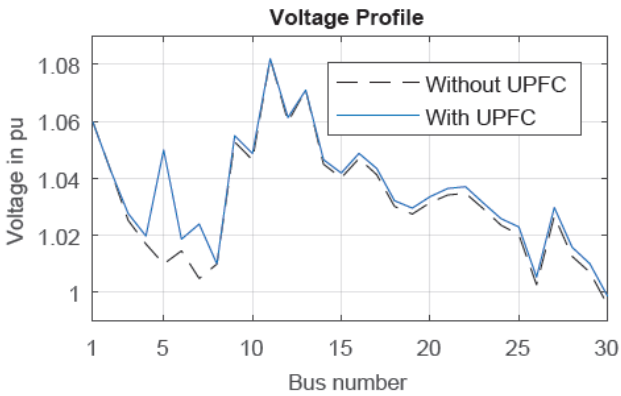

Fig.2. Voltage profile of IEEE 30 bus using PSO algorithm.

Voltage profile for IEEE 30 bus test system for PSO algorithm is shown Fig. 2. The application of the UPFC in test system has improved the voltage profile. At bus number 5 spike in voltage is because of placement of UPFC. Fig. 3 shows the voltage profile of with and without UPFC of IEEE 30 bus system using Cs algorithm. Using CS algorithm placement of UPFC is at bus number 5 it is noticed that spike in voltage with UPFC.

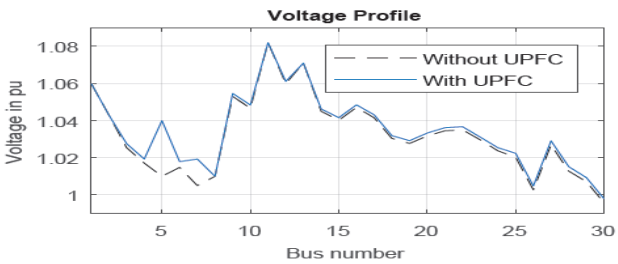

Fig.3. Voltage profile of IEEE 30 bus using CS algorithm.

Table 3: Optimal generation values using PSO & CS algorithm.

Generators	PSO Algorithm		CS Algorithm	
	Power generation in (MW)		*Power generation in (MW)*	
	Without UPFC	*With UPFC*	*Without UPFC*	*With UPFC*
G1	177.88	176.22	176.73	175.46
G2	49.17	49.62	48.83	48.53
G5	21.39	21.36	21.47	21.56
G8	22.44	20.84	21.65	20.58
G11	10.00	10.00	12.09	11.79
G13	12.00	12.00	12.00	12.00

The power generation of six generators of test system is presented in Table 3, By the application of UPFC and OPF using PSO and CS algorithm optimum power generation is obtained. With UPFC, CS algorithm gives better results compared to PSO algorithm. Simulation results of total generation, transmission loss generation cost are summarized in Table 4.

Table 4: Comparison of power generation, Transmission loss, Cost and placing of UPFC in IEEE 30 bus system

Parameters	PSO Algorithm		CS Algorithm	
	Without UPFC	*With UPFC*	*Without UPFC*	*With UPFC*
Total Generation (MW)	292.88	280.04	292.77	269.3404
Transmission loss (MW)	9.48	6.6381	9.3760	6.5157
Generation Cost ($)	801.97	792.12	801.84	791.95
Placement of UPFC (Bus Number)	--	5	--	5

The analytical results show that application of UPFC reduces transmission loss which intern reduces generation cost. With PSO algorithm voltage profile is better compared CS algorithm as shown in Fig. 4, but when multi objectives are considered CS algorithm gives better results compared to PSO algorithm.

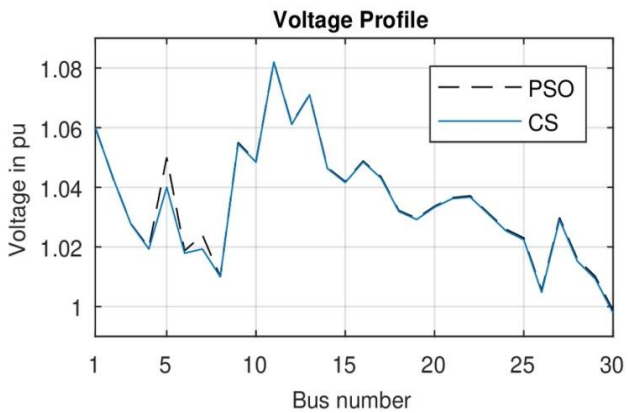

Fig.4. Voltage profile of IEEE 30 bus using PSO and CS algorithm.

V. CONCLUSION

In this paper multi-objective function is proposed for optimum location of UPFC in IEEE 30 bus system. The optimal power flow with PSO and CS optimization techniques are used to locate UPFC. Results revels that application of UPFC improves the voltage profile and optimum placement of UPFC minimizes the transmission loss which intern reduces the generation cost. The results of CS algorithm for UPFC exhibits a superiority in performance compared to the PSO algorithm. The CS algorithm attains better results and reduces computational burden.

REFERENCES

1. N. G. Hingorani, L. Gyugyi, *Understanding FACTS concepts and technology of flexible AC transmission systems*, New York, IEEE Press, 2000, pp. 297-319.
2. P. K. Dash, S. Mishra, G. Panda "A Radial Basis Function Neural Network Controller for UPFC" *IEEE Transactions on Power Systems*, VOL. 15, NO. 4, November 2000
3. Ramin Rajabioun, "Cuckoo Optimization Algorithm", *Applied Soft Computing, Elsevier*, 2011, 5508–5518
4. Singiresu S. Rao, *Engineering Optimization Theory and Practice*, John Wiley & Sons, INC, Fourth Edition, 2009, pp 708-710
5. Vireshkumar G. Mathad, Basangouda F. Ronad, Suresh H. Jangamshetti,"Review on comparison of FACTS controllers for power system stability enhancement", *International Journal of Scientific and Research Publications*, Volume 3, Issue 3, March 2013.
6. Vireshkumar G. Mathad, Basangouda F. Ronad, Suresh H. Jangamshetti," Voltage Control and Power System Stability Enhancement using UPFC", *International Conference on Renewable Energies and Power Quality (ICREPQ'14), Renewable Energy and Power Quality Journal*, ISSN 2172-038 X, No.12, April 2014.
7. Vireshkumar G. Mathad, Gururaj Kulkarni,"Enhancing Power System Performance by Unified Power Flow Controller (UPFC) Using Particle Swarm Optimization Algorithm", *ICEECCOT, IEEE*, December 2018.
8. Singiresu S. Rao, *Engineering Optimization Theory and Practice*, John Wiley & Sons, INC, Fourth Edition, 2009, pp 708-710.
9. K. R. Padiyar, A. M. Kulkarni,"Control Design and Simulation of Unified Power Flow Controller". *IEEE Transaction on Power Delivery*, Vol 13, No. 4, October 1998.

AUTHORS PROFILE

Vireshkumar Mathad He obtained B.E. in Electrical and Electronics Engineering and M.Tech. in Power and Energy Systems from V.T.U. Belagavi, India in 2010 and 2013 respectively. Presently he is research scholar in the Department of Electrical Engineering at V.T.U. Belagavi, India. His research interests include FACTS and Power System Enhancement.

Gururaj Kulkarni He received the B.E. in Electrical Engineering from Karnataka University, Dharwad in 1985, M.Tech. in Power Systems from University of Mysore, Mysore in 1992 and Ph.D. in ANN Applications to Power System from J.N.T.U. Hyderabad in 2007. Presently he is working as a HOD of Electrical and Electronics Engineering at Jain College of Engineering Belagavi, India. His areas of interest include ANN application to Power System.