International Journal of Recent Technology and Engineering (IJRTE)
ISSN: 2277-3878, Volume-8 Issue-5, January 2020

A Novel Unscented Kalman Filter Strategy To Enhance Navigation System Performance

M. Mahmoud, I. Alaa, A. Wassal, A. Noureldin

Abstract*— The Extended Kalman Filter (EKF) is the most widely estimation algorithm used for nonlinear system such as a navigation system to fuse an inertial navigation system (INS) with Global Positioning System (GPS) which its information has complementary nature to get more accurate navigation information. Unfortunately, the performance of INS/GPS fusion using EKF is degraded due to the linearization error and GPS error. Therefore, a new algorithm is developed to overcome these issues. This algorithm uses the sampling-based Unscented Kalman Filter (UKF) to solve the linearization problem, and ignore the GPS reading when there is a large error in its measurements. The new algorithm is named Adaptive Loosely Coupled Unscented Kalman Filter (ALCUKF). The ALCUKF-based INS/GPS systems are presented for two different datasets. The first dataset is acquired using a high-end tactical-grade SPAN unit featuring Novatel HG1700 IMU module. The second dataset is acquired from a MEMS-based SCC1300-D04 IMU unit from VTI. The results of the new method are compared against reference ground truth trajectories and measured quantitatively using the Root Mean Square Error (RMSE). The ALCUKF increased the navigation system performance significantly when compared with EKF for both datasets as shown in the paper.

Index Terms*— Adaptive Loosely Coupled Unscented Kalman Filter (ALCUKF), Extended Kalman Filter (EKF), Global Positioning Systems (GPS), Inertial Navigation Systems (INS), Micro- Electro-Mechanical-System (MEMS), Root Mean Square Error (RMSE), Unscented Kalman Filter (UKF).

I. INTRODUCTION

The inertial navigation system used to determine position, velocity, and attitude of vehicles (car, aircraft, tc.) using three perpendicular axes accelerometers and gyroscopes named inertial measurements units (IMUs). The low-cost Micro-Electro-Mechanical-System (MEMS-based inertial sensors) and its small size allows INS to be used in civilian applications such as smart driving, unmanned aerial vehicles (UAVs) control, transportation tracking and monitoring among many others.

The MEMS-based inertial sensors gives reliable navigation information for a short-term only as MEMS suffer from bias drift which has stochastic nature and this drift degrades the navigation accuracy over long-term due to mathematical integration. On the other hand, the GPS gives good navigation information with bounded error characteristics over long-term, but it suffers from signal outage due to the loss of direct line-of-sight with sufficient number of GPS satellites or due to multi-path problem or jamming problem. Therefore, we can use MEMS to give high accuracy navigation for short-term to overcome GPS outages. Due to the complementary nature of INS and GPS information, they will fuse in one system which gives more accurate navigation information [3]. The Extended Kalman filter is an estimation algorithm which is used for nonlinear system is commonly used in INS/GPS integration, but it suffers from linearization problem which degrades the performance. This issue will be explained in section 2. New algorithm which depends on sigma points unscented Kalman filter which solves the linearization problem of EKF and the new algorithm also depending on some conditions to determine the efficiency of GPS information and detect the GPS outages will be explained in section 3. The two methods tested using different datasets against ground truth trajectories, the simulation tests are shown in section 4 followed by the concluding remarks in section 5.

II. INS/GPS INTEGRATION USING EXTENDED KALMAN FILTER ARCHITECTURE

The kalman filter is designed as an estimation tool for linear system with additive Gaussian noise. However, the assumption of noise normality is not the only factor which effect the overall performance of the filter. Additionally

Manuscript published on January 30, 2020.
* Correspondence Author
M. Mahmoud*, Lecturer Assistant, Department of Computer Engineering, Cairo University, Cairo, Egypt.
E-mail: mostafamahmoud86@eng.cu.edu.eg
I. Alaa, Ph.D Student Alberta University, Canada.
E-mail: islam.a.mustafa@gmail.com
A. Wassal, Professor, Department of Computer Engineering, Cairo University, Cairo, Egypt. E-mail: *wassal*@eng.cu.edu.eg
A. Noureldin, Professor, Department of Electrical and Computer Engineering, RMC / Queens University, Kingston, Ontario, Canada.
E-mail: aboelmagd.noureldin@rmc.ca

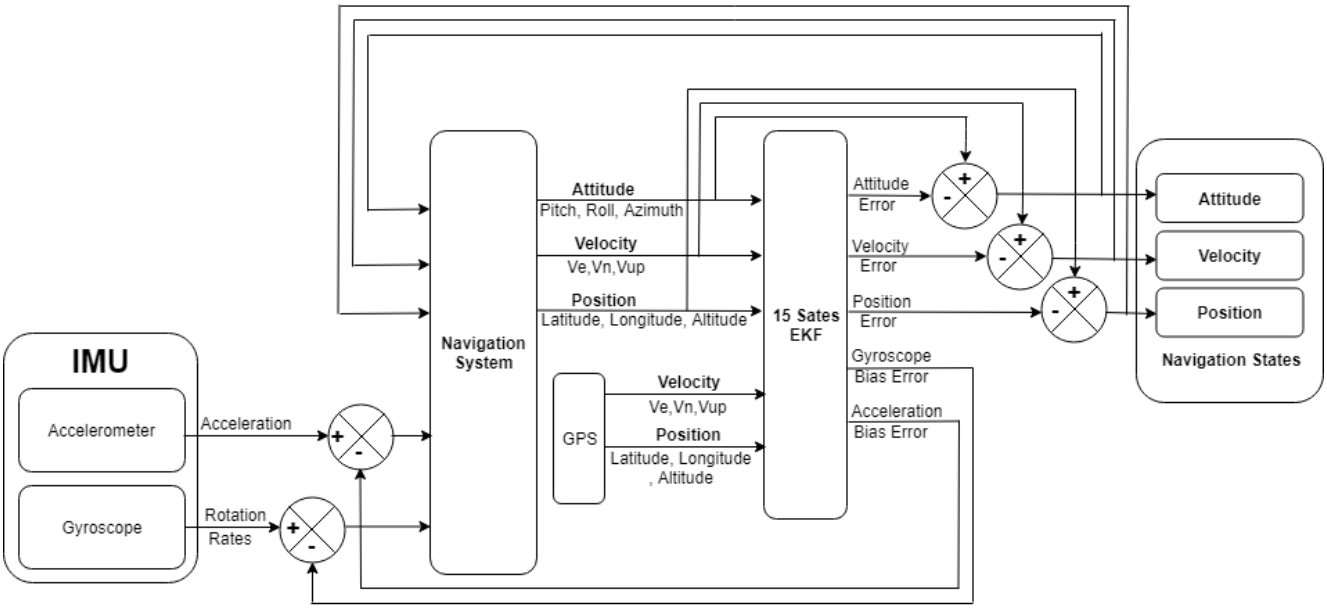

Fig. 1: INS/GPS integration using EKF.

factor which effect the filter performence is the dynamic equations of navigation system which is nonlinear. The extended kalman filter is an associate degraded extension to Kalman filter which enlarge the nonlinear feature around point using Taylor series expansion and takes the first order approximation which impacts the overall performance of the system. Figure 1 shows the fusion between INS and the GPS using loosely coupled EKF architecture. The IMU raw data which is a three angular velocities and three accelerations integrated to get navigation states (attitude, velocity, and position) after that these states fused with GPS readings (position and velocity) to improve the navigation accuracy. Then the EKF outputs are fed-back to the system navigation to enhance the system performance.

A. Navigation System Model

The dynamic mechanization equations of INS described in equation 1 which is used in the INS/GPS integration and results the attitude, velocity, and position in the local level frame [4].

$$\begin{pmatrix} \dot{r}^l \\ \dot{V}^l \\ \dot{R}_b^l \end{pmatrix} = \begin{pmatrix} D^{-1}V^l \\ R_b^l f_b - (2\Omega_{ie}^l + \Omega_{el}^l)V^l + g^l \\ R_b^l(\Omega_{ib}^b - \Omega_{il}^b) \end{pmatrix} \quad (1)$$

where,

$\dot{r}^l$: is the time rate of change of the position.
$\dot{V}^l$: is the time rate of change of velocity.
$\dot{R}_b^l$: is the time rate of change of rotational matrix from body frame to local level frame.
R_b^l : is the rotational matrix from body frame to local level frame.
f_b : is the acceleration in the body frame.
g^l : is the earth gravity vector in the local level frame.
Ω_{ie}^l : is the skew symmetric matrix of earth rotation about its spin axis.
Ω_{el}^l : is the skew symmetric matrix of orientation change of local level frame with respect to the earth.
Ω_{ib}^b : is the skew matrix of the measurements of angular velocities.
Ω_{il}^b : is the skew symmetric matrix of the compensation term used to account for the earth rotation rate and orientation change of the local-level.

The specified nine navigational states (attitude, velocity, and position) endure from an extreme drifting impact after a very short period due to the numerical integration of the stochastic bias in inertial sensors which needs integration with a GPS to ideally appraise the stochastic inclinations and rectify the mistake in the navigation states [15].

B. Extended Kalman Filter

EKF [1] is the foremost utilized procedure in nonlinear filtering. For each step in the algorithm, the nonlinear dynamic and the measurement functions approximated to the first order of Taylor series expansion around the current gauges. It consists of two main steps; the first step is the prediction step which is explained in equations 2 and 3 where the prior error state vector and the prior error covariance matrix calculated [5].

$$\hat{\chi}_\kappa^- = F\hat{\chi}_{\kappa-1} \quad (2)$$

$$\hat{P}_\kappa^- = FP_{\kappa-1}F^T + Q \quad (3)$$

where,

$\hat{\chi}_\kappa^-$: is the prior state vector include error components of attitude, velocity, and position as well as accelerometer bias error and gyroscope drift error

F : is the state transition matrix which include the INS error models of navigation states and inertial sensors and obtained by taking first order time derivative of nonlinear navigation equations described by equation 1.

$\hat{P}_{\kappa}^{-}$: is the prior state error covariance matrix describing the error in the error state vector.

Q : is the process noise covariance matrix which measure the error in the navigation states and the inertial sensor noise.

After that, EKF proceeds to the correction step which is illustrated in equations 4, 5, and 6 where the Kalman gain is computed then updates the error state vector and the error covariance matrix.

$$K_{\kappa} = P_{\kappa}^{-} H^{T} (H P_{\kappa}^{-} H^{T} + R)^{-1} \quad (4)$$

$$\hat{\chi}_{\kappa}^{+} = \hat{\chi}_{\kappa}^{-} + K_{\kappa}(Z_{\kappa} - H\hat{\chi}_{\kappa}^{-}) \quad (5)$$

$$P_{\kappa}^{+} = (I - K_{\kappa} H) P_{\kappa}^{-} \quad (6)$$

where,

K : is the Kalman gain.

R : is the measurement noise covariance matrix which measure the error in GPS readings.

H : is the measurement model matrix.

$\hat{\chi}_{\kappa}^{+}$: is a posteriori state vector which is the updated error state vector after the GPS update.

P_{κ}^{+} : is a posteriori state error covariance matrix is the updated error covariance matrix after the GPS update.

Z : is the GPS measurements vector.

The EKF has some shortcomings which will be described in the next section. These drawbacks affect precision of the filter results which lead us to develop our new algorithm which enhances precision of the system.

III. STATE OF THE ARTS

As described above EKF depends on the state transition matrix F which is obtained by taking first order approximation of Taylor series expansion which generates problem in error estimation of state vector. Also, The EKF has many shortcoming due to propagation of the system state through first order linearization system which gives a large error in mean and covariance of system state and may cause divergence of the system[6]. Also, EKF depends on measurements noise covariance matrix R and process noise covariance matrix Q which are initially estimated using different methods but the incomplete prior knowledge of these matrices and quality of its initial values affects the precision of the estimated filter states [7] and can result in a divergence of the filter [8]. These reasons lead to unscented Kalman filter which depends on a deterministic sampling approach and works on true nonlinear system as it chooses the system state from minimal set of weighted sigma points then propagates it through non-linear system which helps to calculate the true mean and covariance of system state accurately to third order Taylor series expansion. Maybeck [9] made adaptive filter using maximum-likelihood method to estimate system-error covariance matrix. Maybeck method modified by Lee and Alfriend [10] by running noise estimator algorithm to tune the noise covariance matrix on different filters. This method is not numerically very robust. The sensor noise covariance estimated using fuzzy logic method with innovation adaptive estimation method by Loebis et al [11]. But the increment values of the covariance matrix at each epoch is difficult to determine. The integration of INS/GPS navigation system using multiple-model-based adaptive Kalman filter is investigated by Mohamed et al[12], but this technique needs the prior knowledge of all the possible statuses. EKF use GPS measurements to update the navigation states and prevent it from drifting. However, the GPS signal quality from an adequate number of GPS satellites for the recipient is still basic in utilizing GPS as navigation gadgets, such as under-water, interior buildings, under trees, in burrows, and between tall buildings. Therefore, for a reliable navigation system another algorithm developed in this paper to reach a stable system with an accurate high performance which is described in the following section.

IV. ADAPTIVE LOOSELY COUPLED UNSCENTED KALMAN FILTER

The adaptive loosely coupled unscented Kalman filter algorithm based on unscented Kalman filter [2] gives better performance for nonlinear system than EKF. UKF based on sampling approach, it expresses the system by Gaussian random variable. It starts by choosing n points from previous distribution of that random variable called sigma points. After that it propagates these points through nonlinear function instead of the linearized one which reduces the errors resulting from system linearization. This technique is more accurate than Taylor series linearization as it considers the spread of the random variable [13]. The state distribution linearized through first order approximation of Taylor series expansion in EKF which expands the nonlinear equations around single point only disregarded the nature of the uncertainty of the prior mean and covariance so that the posterior mean and covariance may well be corrupted. The UKF, which may be a derivative-free elective to EKF, overcomes this issue by employing a deterministic sampling approach [14]. Like EKF, UKF consists of two main steps: prediction step and correction step, but they are gone before presently by another step for determination of sigma points. Figure 2 illustrates the steps of ALCUKF, it starts with choosing sigma points by employing equations 7, 8, and 9 [13].

$$\chi_{0,\kappa} = \hat{\chi}_{\kappa} \;\; for \;\; i = 0 \quad (7)$$

$$\chi_{i,\kappa} = \hat{\chi}_{\kappa} + (\gamma\sqrt{P_{xx}})_i \;\; for \;\; i = 1, \ldots\ldots, n \quad (8)$$

$$\chi_{i,\kappa} = \hat{\chi}_{\kappa} - (\gamma\sqrt{P_{xx}})_i \; for \;\; i = n+1, .., 2n \quad (9)$$

where,

$\hat{\chi}$	:	is the state mean [position, velocity, attitude].
P_{xx}	:	is the state covariance.
$(\gamma\sqrt{P_{xx}})_i$	:	is the ith row of the matrix square root and is computed through Cholesky factorization.
n	:	is the state vector dimension.

Pxx is the error covariance of the system state and its initial value is very important as it may cause divergence of the system. Its initial values defined it as the average of the true error which is the difference between ground truth and system state[15].

Then the weight of each sigma points is calculating the prior mean and covariance computed using equations 10, 11, and 12[16].

$$W_0^m = \frac{\lambda}{n+\lambda} \tag{10}$$

$$W_0^c = \frac{\lambda}{n+\lambda} + (1-\alpha^2+\beta) \tag{11}$$

$$W_i^c = W_i^c = \frac{1}{2(n+\lambda)} \quad for \;\; i = 1,2,..,2n \tag{12}$$

where,

α : is used to limit/increase the acceptable region from which samples can be drawn about the mean. A smaller value moves the sigma points towards the mean and vice-versa. The acceptable range is 10-4 to 1.

β : is used to incorporate prior knowledge of the distribution of x. For Gaussian distributions it usually set it to 2.

λ and γ is computed in in equation 13 and 14

$$\lambda = \alpha^2(n+k) - n \tag{13}$$

$$\gamma = \sqrt{n+\lambda} \tag{14}$$

where, k is a scaling parameter to adjust the effect of the fourth and higher moments of the probability distribution during given nonlinear transformation and is usually set to 0.

After that each sigma point is passed through the nonlinear function which is the navigation system model described in equation 1, to obtain the transformed sigma points. Then the prior mean and prior covarianceare calculated using equations 15 and 16

$$\hat{x}_{\kappa+1} = \sum_{i=0}^{2n} W_i^m x_{i,\kappa+1} \tag{15}$$

$$P_{xx,\kappa+1} = Q + \sum_{i=0}^{2n} W_i^c [x_{i,\kappa+1} - \hat{x}_{\kappa+1}][x_{i,\kappa+1} - \hat{x}_{\kappa+1}]^T \tag{16}$$

Q is the error covariance due to the error in the used sensor and its initial values. It is defined as the average of the true error which is the difference between ground truth and INS as described in [15].

The ALCUKF uses GPS to enhance the system performance which suffers from the noise existing in

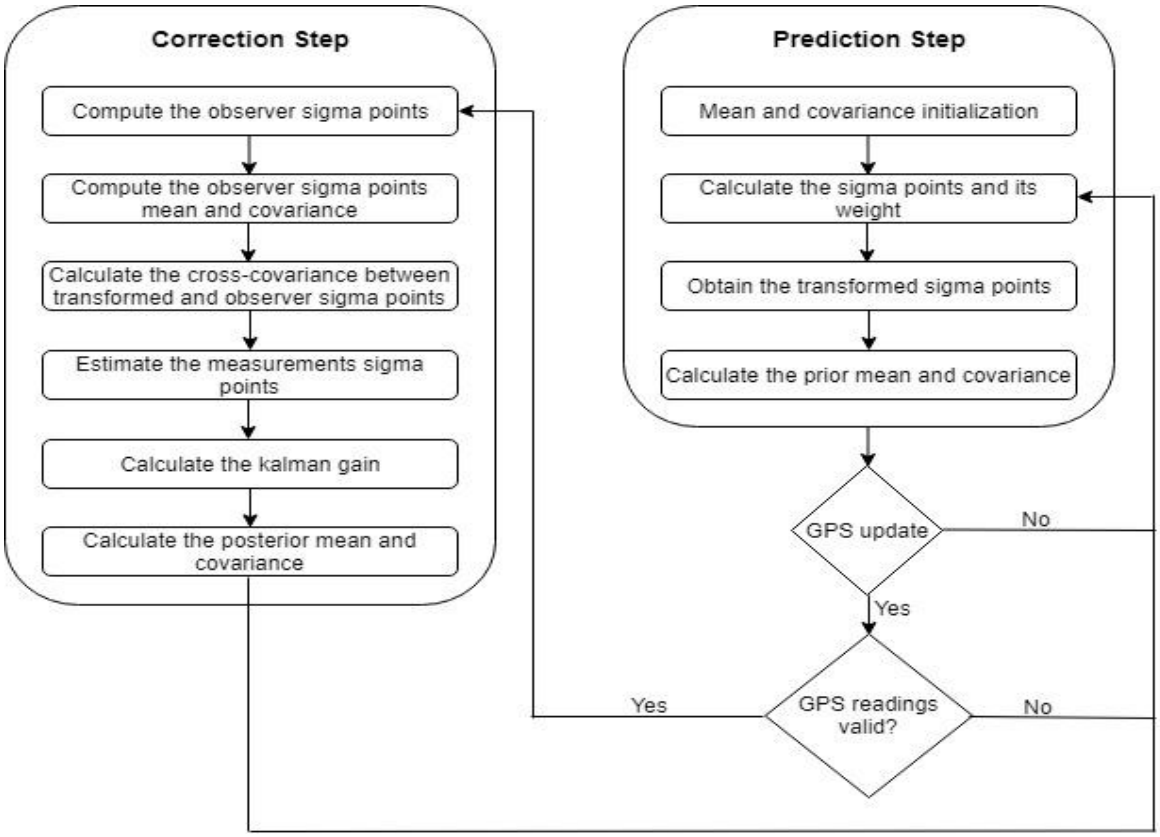

Fig. 2: INS/GPS integration using ALCUKF

the sensors measurements. But the GPS measurements suffer from many issues like:

- satellite signal blockage due to buildings, indoor, underground use, etc.
- The multipath problem which happens due to signal reflection from building and walls.
- Radio interference or jamming
- Satellite maintenance/maneuvers creating temporary gaps in coverage.

All these issues can cause the GPS measurements to drift. Therefore, the ALCUKF checks if the GPS measurements are valid before using it in the correction step of UKF. The GPS measurements validation are determined by the following conditions in equation 17. This equation determines validation of the GPS measurements using the previous and current GPS measurements and the computed navigation states from IMU. In this equation, the difference between 2 consecutive GPS measurements mustn't exceed a certain threshold as the GPS fixed on a car and the time between 2 consecutive GPS measurements is 1 sec. Also, the error between the predicated navigation states and the current GPS measurements mustn't be large as the errors in the navigation states due to sensors noises are not large as the sensors noise is well calibrated so if this error exceeds a certain threshold then this error happened due to problems in the GPS measurements.

$$\left|INS_{predicated} - GPS_{measurements}\right| > TH_1 \; or$$
$$\left|GPS_{measurements,\kappa+1} - GPS_{measurements,\kappa}\right| > TH_2 \qquad (17)$$

where, TH1 and TH2 are manual tuning to achieve the highest possible performance. After that the technique proceed to the correction step by passing all these transformed sigma points through the observer function h, to obtain the Y sigma points

$$Y_{i,\kappa+1} = h(x_{i,\kappa+1}) \qquad (18)$$

Then compute the mean and covariance of these observer sigma points,

$$\hat{Y}_{\kappa+1} = \sum_{i=0}^{2n} W_i^m Y_{i.\kappa+1} \qquad (19)$$
$$P_{yy,\kappa+1} = R + \sum_{i=0}^{2n} W_i^c [Y_{i,\kappa+1} - \hat{Y}_{\kappa+1}][Y_{i,\kappa+1} - \hat{Y}_{\kappa+1}]^T \qquad (20)$$

And calculate the Cross-Covariance between the X and Y sigma points

$$P_{xy,\kappa+1} = \sum_{i=0}^{2n} W_i^c [x_{i,\kappa+1} - \hat{x}_{\kappa+1}][Y_{i,\kappa+1} - \hat{Y}_{\kappa+1}]^T \qquad (21)$$

Now the Kalman Gain is given as

$$K_{\kappa+1} = \frac{P_{xy}}{P_{yy}} \qquad (22)$$

And posteriori mean and covariance is given as

$$x_{i,\kappa+1} = x_{i,\kappa+1} + K_{\kappa+1}[Z_{\kappa+1} - \hat{Y}_{\kappa+1}] \qquad (23)$$
$$P_{xx,\kappa+1} = P_{xx,\kappa+1} - K_{\kappa+1} P_{yy,\kappa+1} (K_{\kappa+1})^T \qquad (24)$$

Where, $Z_{\kappa+1}$ is the GPS measurements. The new technique makes a large enhancement in performance relative to EKF as shown in experimental results section.

V. EXPERIMENTAL SIMULATION RESULTS

In our experimental simulation, two IMU sensor used to compare the navigation states results from their acquired measurements with a reference trajectory. The first one is a high-end tactical-grade SPAN unit featuring Novatel HG1700 IMU module which its measurements frequency is 100 Hz while the other one is a MEMS-based SCC1300-D04 IMU unit from VTI which its operating frequency is 20 Hz and the GPS update is coming every 1 second. The reference trajectory of the high-end tactical-grade SPAN unit compared with two systems which are:

- INS/GPS integration using EKF.
- INS/GPS integration using ALCUKF

Figure 3 shows the trajectories of reference unit INS and standalone INS without any GPS correction and the two systems uses Novatel unit then the accuracy of velocity and attitude of both systems are compared with reference system illustrated in figure 4 and figure 5 respectively. Also, the position, velocity and Attitude errors are displayed in figure 6, 7, and 8 respectively. Analytically, the maximum root mean square error (RMSE) values of the different navigation states are presented in Table 1. Table 1 presents RMSE in INS/GPS integration using both EKF and ALCUKF and shows the enhancement in system performance when using ALCUKF instead of EKF.

Table- I: Comparison between Novatel unit RMSE in integrated INS/GPS using EKF and ALCUKF

	$RMSE_{EKF}$	$RMSE_{ALCUKF}$	Enhanc-ement
Lat.	1.9852 m	1.1816 m	40.47%
Long.	2.1329 m	1.6675 m	21.82%
Alt.	4.4339 m	2.3511 m	46.97%
Ve	0.3408 m/sec	0.1829 m/sec	46.33%
Vn	0.2123 m/sec	0.0994 m/sec	53.17%
Vup	0.1740 m/sec	0.0346 m/sec	80.11%
Pitch	0.5047 degree	0.4964 degree	1.64%
Roll	0.7290 degree	0.7248 degree	0.58%
Azimuth	2.1220 degree	0.3714 degree	82.49%

Figure 9 shows the trajectory produced by the standalone INS versus the INS/GPS integration using EKF and the new technique ALCUKF against the reference trajectory MEMS-based SCC1300-D04 IMU unit from VTI. It shows that the ALCUKF-based INS/GPS yields a more robust and reliable navigation information than the other systems. Also, Table 2 shows position, velocity, and attitude RMSE comparison between EKF and ALCUKF.

VI. CONCLUSION

ALCUKF technique has shown a significant improvement in navigation performance accuracy for integrating INS/GPS systems than EKF-based INS/GPS system. This improvement comes from two reason, the first one is using UKF which works with nonlinear navigation system model instead of linearizing it using first order Taylor series expansion as in EKF. The other reason is adapting the correction step to be used only when there is a valid GPS measurement which depends on some thresholds which are manual tuned to achieve the best performance. In this paper, the new algorithm ALCUKF is tested against EKF-based INS/GPS integration using two datasets acquired from a high-end tactical-grade SPAN unit featuring Novatel HG1700 IMU module and a MEMS-based SCC1300-D04 IMU unit from VTI.

The results illustrated in the paper show that the ALCUKF make a signification enhancement in navigation performance than EKF for both two datasets.

Table- II: Comparison between VTI unit RMSE in integrated INS/GPS using EKF and ALCUKF

	$RMSE_{EKF}$	$RMSE_{ALCUKF}$	Enhance-ment
Lat.	41.472 m	13.5880 m	67.32%
Long.	57.755 m	14.0929 m	72.98%
Alt.	14.613 m	1.4000 m	90.04%
Ve	3.8823 m/sec	1.0739 m/sec	72.33%
Vn	1.1464 m/sec	1.0707 m/sec	6.61%
Vup	3.8823 m/sec	0.1105 m/sec	97.15%
Pitch	8.9062 degree	1.4967 degree	83.19%
Roll	2.2384 degree	1.5979 degree	28.61%
Azimuth	12.072 degree	9.8885 degree	18.09%

REFERENCES

1. R. E. Kalman and R. S. Bucy, New Results in Linear Filtering and Prediction Theory, 83th ed. Transactions of the ASME - Journal of Basic Engeenering, 1960.
2. S. J. Julier and J. K. Uhlmann, A New Extension of the Kalman Filter to Nonlinear Systems, The International Symposium on Aerospace/Defense Sensing,Simulation and Controls, Multi Sensor Fusion, Tracking and Resource Management 11, 1997.
3. S. Sukkarieh, Low Cost, High Integrity, Aided Inertial Navigation Systems for Autonomous Land Vehicles, PhD thesis, Australian Centre for Field Robotics, The University of Sydney, 2000.
4. A. Noureldin, T. B. Karamat and J. GeorgyFundamentals of Inertial Navigation, Satellite-based Positioning and their Integration, Springer Nature, 2013.
5. J. Kim, Autonomous Navigation for Airborne Applications, PhD thesis, Australian Centre for Field Robotics, The University of Sydney, 2004
6. R. Merwe and E. A. Wan, Sigma-Point Kalman Filters for Integrated Navigation, 60th ed Proceedings of the 60th Annual Meeting of The Institute of Navigation, 2004.
7. *R. K. Mehra, On-line identification of linear dynamic systems* with applications to Kalman filtering, 16th ed. IEEE Transaction on Automatic Control, AC, 1971.
8. R. J. Fitzgerald, Divergence of the Kalman filter, 16th ed. IEEE Transaction on Automatic Control, AC, 1971.
9. P. S. Maybeck, Stochastic Models, Estimation and Control, New York-Academic Press, 1979.
10. D. J. Lee and K. T. Alfriend, Adaptive sigma point filtering for state and parameter estimation Astrodynamics Specialist Conference and Exhibit. Rhode Island, 2004
11. D. Loebis, R. Sutton, J. Chudley and W. Naeem, Adaptive tuning of a Kalman filter via fuzzy logic for an intelligent AUV navigation system, 12th ed. Control Engineering Practice, 2004.
12. A. J. Mohamed and K. P. Schwarz, Adaptive Kalman filtering for INS/GPS, 73th ed. Journal of Geodesy, 1999.
13. R. Merwe, Sigma-Point Kalman Filters for Probabilistic Inference in Dynamic State-SpaceModels, Technical report, 2003.
14. E. Wan and R. Merwe, The Unscented Kalman Filter, Wiley Publishing, 2001.
15. M. Mahmoud, I. Alaa, A. Wassal, A. Noureldin and A. Eldieb, TUNING OF THE ERROR COVARIANCE PARAMETERS IN EKF-BASED INS/GPS SYSTEMS: A PRACTICAL APPROACH, International Conference on Mobile Mapping Technology (MMT), 2017.
16. G. A. Terejanu, Unscented Kalman Filter Tutorial, Department of Computer Science and Engineering University at Buffalo, 2011.

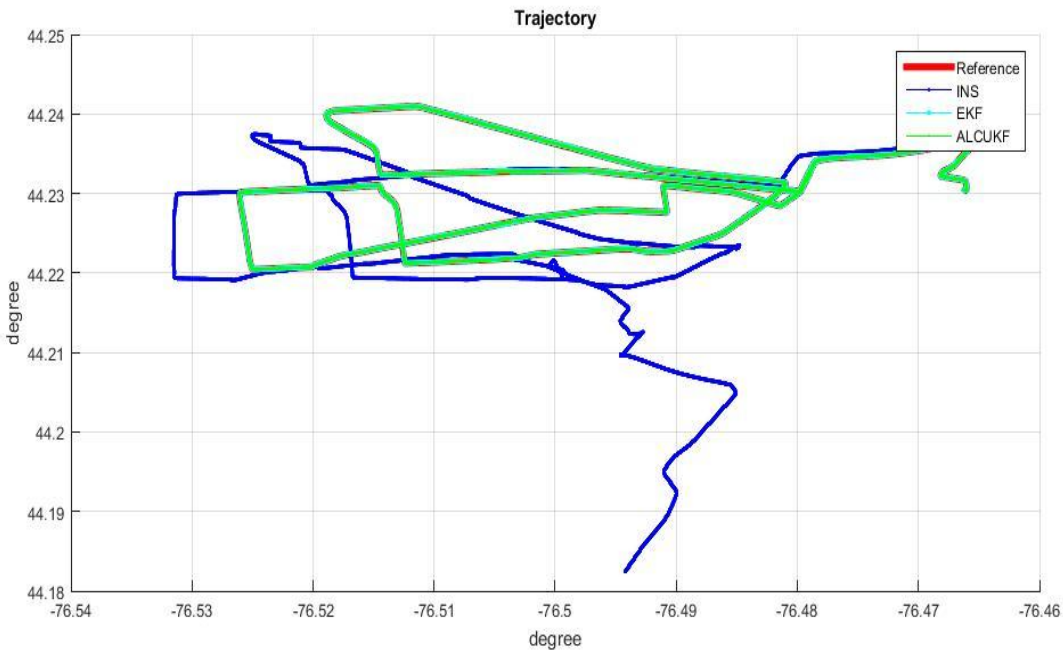

Fig. 3: Novatel HG1700 Trajectory Results.

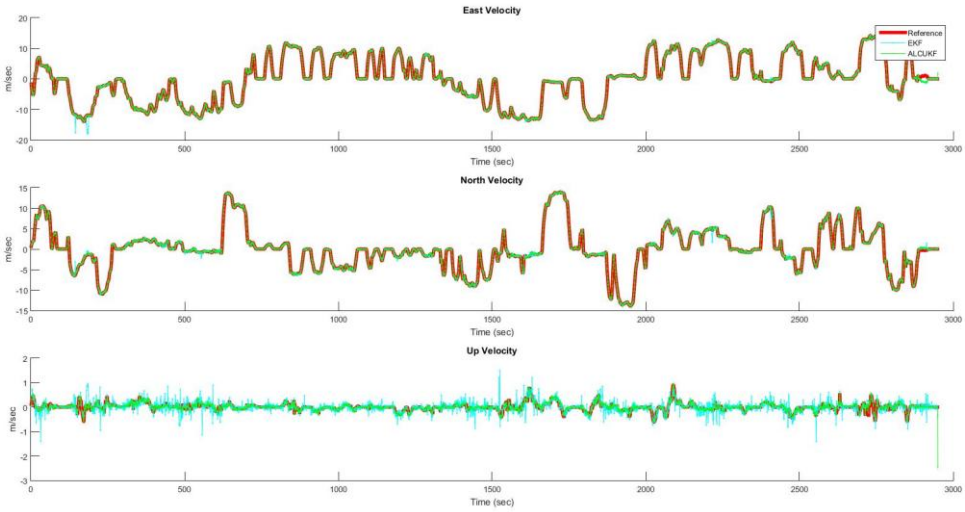

Fig. 4: Novatel HG1700 Velocity Results.

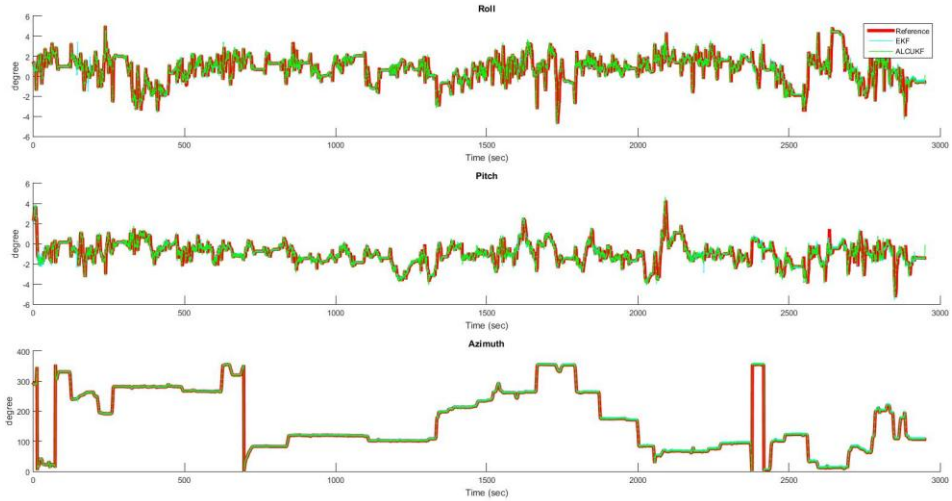

Fig. 5: Novatel HG1700 Attitude Results.

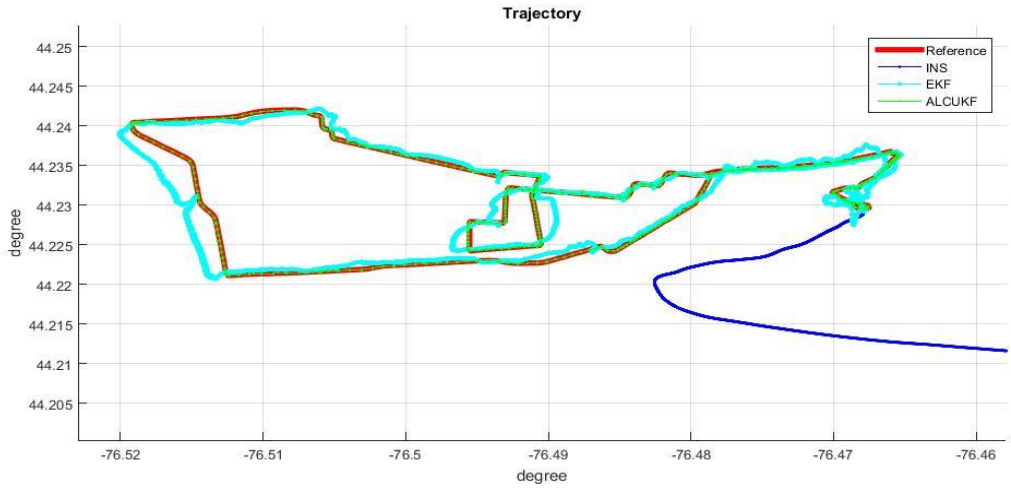

Fig. 9: VTI SCC1300-D04 IMU unit Trajectory Results

AUTHORS PROFILE

M. Mahmoud, received his B.Sc. (with honors) and M.Sc. both in Computer Engineering from Cairo University in 2008 and 2014 respectively. In 2015, he started pursing his Ph.D. degree in Computing Science at the University of Cairo where he is currently affiliated with the sensors fusion techniques. His current research interests include Sensors Fusions technique, real-time autonomous systems, robotics and radiation fault modeling

I. Alaa, received his B.Sc. (with honors) and M.Sc. both in Computer Engineering from Cairo University in 2013 and 2018 respectively. In 2019, he started pursing his Ph.D. degree in Computing Science at the University of Alberta where he is currently affiliated with the Robotics\Vision Research Lab. His current research interests include resilient visual-inertial navigation systems, robotics, and real-time autonomous systems.

Dr. A. Wassal, received his B.Sc. (Hons.) and M.Sc. degrees in Electronics and Communications Engineering from Cairo University in 1993 and 1996 respectively. He received the Ph.D. degree in Electrical and Computer Engineering from the University of Waterloo, Ontario, Canada, in 2000. His current research interests are in the areas of reconfigurable and multi-core DSP processors for wireless and MEMS applications as well as classical Chemometrics and modern machine learning techniques for IR spectroscopy modeling. He also has active interest in different areas of EDA algorithms and technologies, as well as, control architectures for electro-mechanical systems

Dr. A. Noureldin holds B.Sc. degree in Electrical Engineering (1993) and M.Sc. degree in Engineering Physics (1997) from Cairo University, Giza, Egypt. In addition, he holds Ph.D. degree in Electrical and Computer Engineering (2002) from The University of Calgary, Alberta, Canada. His current research interests are in the areas of Wireless Positioning and Localization; Multi-Sensor Fusion for Positioning and Navigation; Machine Vision, Vehicular IoT; Machine Intelligence; Deep Learning