International Journal of Recent Technology and Engineering (IJRTE)
ISSN: 2277-3878, Volume-8 Issue-5, January 2020

Effects of Spring and Damper Elements in Aircraft Landing Gear Dynamics

Ali Dinc, Yousef Gharbia

Abstract: ***In this study a typical Aircraft Landing Gear with shock absorber was modeled a Mass-Spring-Damper System. Basic components of the system were explained. The equations of the model was presented. Aircraft Landing Gear was also modeled in Matlab/Simulink for a given set of aircraft parameters. A case study for an Aircraft Landing Gear was solved and results were presented. Results included the variation of spring (k_1 and k_2) and damping coefficient (b) in a given interval to show their effects on the impact force and displacement of landing gear as main outputs to consider. Effect of damping coefficient (b) on impact force was found to be highest (3.76%), spring coefficient (k_1) effect is moderate (2.29%), and spring coefficient (k_2) is lower (0.97%), for a change of ±10% of coefficients.***

Keywords : Aircraft landing gear, mass-spring-damper system, shock absorber, system modeling.

I. INTRODUCTION

Shock absorbers are used in many fields from automotive to aviation today. There are designed for each specific application for a set of customer and design requirements. Although their main function is to absorb the impact energy of moving objects, they have basically two main components which are spring and damper. Shock Absorbers reduce the effects of travelling over rough ground for a vehicle on road or helps an aircraft to land more smoothly.

The use of shock absorbers in the landing gears of aircraft are more complex and need state of the art design. There are numerous studies related with shock absorber modelling in literature for many applications. Conway [1] and Currey [2] explained the details of landing gear design and are among the best references available in literature. Flugge [3] analyzed impact forces in landing gears using oleo-pneumatic shock strut considering both the landing impact and the taxying impact. Milwitzky and Cook [4], [5] investigated the theoretical study of the behavior of the conventional type of oleo-pneumatic landing gear during the process of landing impact. Niezgoda et al. [6] discussed the methods used to the static analysis and presents a model, which allows determining the dynamics characteristics of the landing gear. Son et al. [7] proposed a new method for reducing the shock vibration response of an unmanned aerial vehicle during the landing process by means of the momentum exchange principle. Reference [8] talked about the application of a nature-inspired optimization technique to solve an inverse problem represented by the identification of an aircraft landing gear model. Jenkins [9] discussed design requirements and the compatibility of shock absorbers to satisfy the performance required. Yadav and Ramamoorthy [10] investigated the nonlinear landing gear behavior at touchdown.

Manuscript received on January 02, 2020.
Revised Manuscript received on January 15, 2020.
Manuscript published on January 30, 2020.
* Correspondence Author
Ali Dinc*, Department of Engineering and Technology, American University of the Middle East, Kuwait. Email: Ali.Dinc@aum.edu.kw
Yousef Gharbia, Department of Engineering and Technology, American University of the Middle East Kuwait. Email: Yousef.Gharbia@aum.edu.kw

II. MATERIAL AND METHOD

An aircraft landing gear can be modelled as a mass-spring-damper system. Fig. 1 shows a simplified model of landing gear. In this model shock absorber was modelled as spring and damper, tire was modelled as spring and mass of aircraft was added to the model as a portion per landing gear.

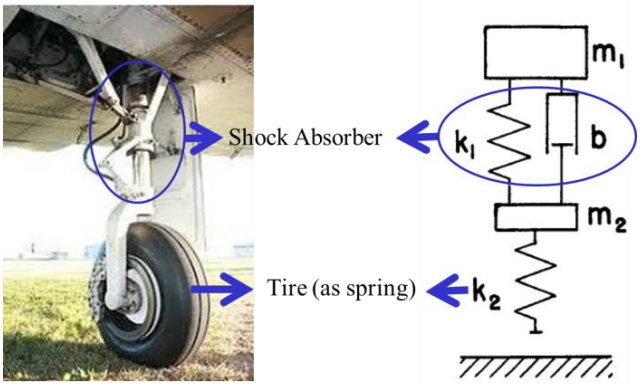

Fig. 1.Simplified model of an aircraft landing gear

A. Behavior of Springs

In general, springs can be classified as linear and non-linear springs as shown in Fig. 2. Linear spring is a straight line in force versus displacement plot. In order words, there is a constant slope of the line which is a spring constant and can be described as follows:

$$F = kx \quad (1)$$

where F is force and x is the displacement and k is the spring constant.

For non-linear springs as depicted in Fig. 2, the slope of the curve is not constant. For non-linear springs, equation of the curve is defined based on its `force vs. displacement` behavior.

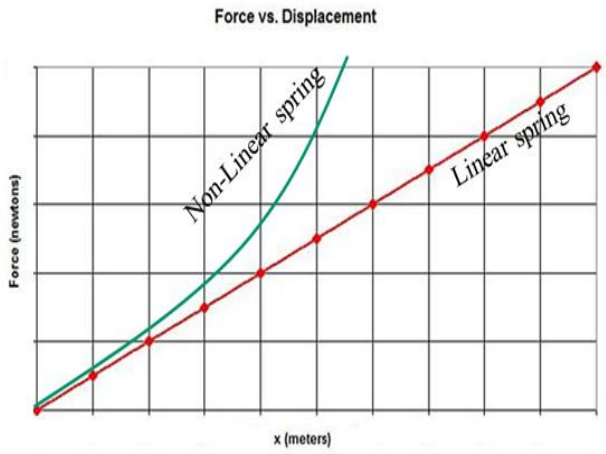

Fig. 2.Behavior of springs

B. Behavior of Dampers

Dampers dissipate kinetic energy supplied to it. Typically with friction, it converts mechanical energy to heat. In other words, a damper resists motion by friction. If there is no motion (speed), there is no force to resist. Dampers can be simple hydraulic devices in a piston/cylinder arrangement so that hydraulic fluid can go from one side of the piston to the other side through a hole (orifice) in a contained cylinder to resist the motion and absorb mechanical shocks by converting kinetic energy to heat. They can be classified as linear and non-linear dampers as shown in Fig. 3. Linear damper is a straight line in force versus speed plot. It can be described as follows:

$$F = bV \quad (2)$$

where F is force and V is the velocity or speed and b is the damping coefficient.

For non-linear springs as depicted in Fig. 3, the slope of the curve is not constant. For non-linear springs, equation of the curve is defined based on its `force vs. displacement` behavior.

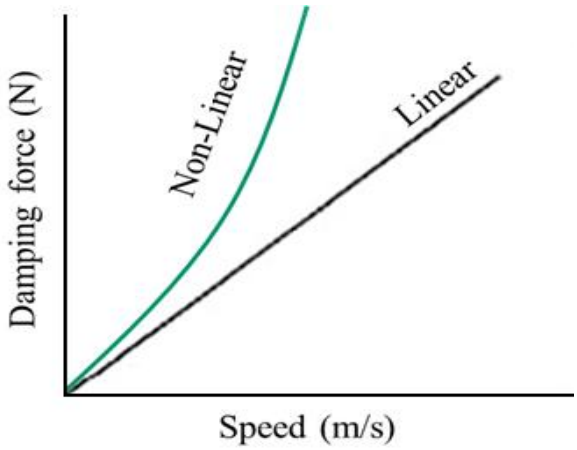

Fig. 3.Behaviour of dampers

III. FORMULATION OF THE DYNAMIC PROBLEM

The objective of the dynamic problem is to find the resultant force acting on aircraft and displacements. A typical model can be used to write the equations of the motion as shown in Fig. 4. In order to find F_1 force acting on the mass m_1 (aircraft mass per landing gear), we can write Newton's second law of motion:

$$F = ma \quad (3)$$

$$F_1 = m_1\ddot{x}_1 = W_1 - F_{spring} - F_{damping} \quad (4)$$

$$F_1 = m_1\ddot{x}_1 = W_1 - kx - b\dot{x} \quad (5)$$

$$x = x_1 - x_2 \quad (6)$$

$$m_1\ddot{x}_1 + k_1(x_1 - x_2) + b(\dot{x}_1 - \dot{x}_2) = W_1 \quad (7)$$

$$W_1 = m_1 g - L \quad (8)$$

$$m_1\ddot{x}_1 + k_1(x_1 - x_2) + b(\dot{x}_1 - \dot{x}_2) = m_1 g - L \quad (9)$$

where:

- b : shock absorber damping coefficient
- F_1 : net force on m1
- F_2 : ground reaction force
- g : gravity
- k_1 : shock absorber spring constant
- k_2 : tire spring constant
- L : lift force acting on aircraft
- m_1 : aircraft mass (per landing gear)
- m_2 : sum of wheel, tire and axle mass
- V : aircraft vertical speed (descent velocity)
- W_1 : aircraft weight minus lift force
- x_1 : displacement of aircraft
- x_2 : displacement of wheel

As a next step, F_2 force acting on the mass m_2 (wheel and tire mass) need to be formulated. Again, Newton's second law of motion:

$$F_2 = m_2\ddot{x}_2 = F_{spring,\ shock\ absorb} + F_{damping} - F_{spring,\ tire} \quad (10)$$

$$m_2\ddot{x}_2 = k_1 x + b\dot{x} - k_2 x_2 \quad (11)$$

$$x = x_1 - x_2 \quad (12)$$

$$m_1\ddot{x}_1 + k_1(x_1 - x_2) + b(\dot{x}_1 - \dot{x}_2) = W_1 \quad (13)$$

$$m_2\ddot{x}_2 - k_1(x_1 - x_2) - b(\dot{x}_1 - \dot{x}_2) + k_2 x_2 = 0 \quad (14)$$

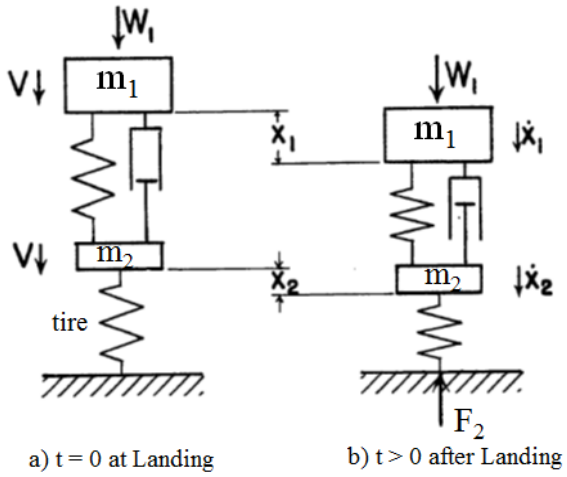

Fig. 4.Landing gear model

IV. RESULTS AND DISCUSSION

The computer model was constructed in Matlab/Simulink as shown in Fig. 5. Matlab/Simulink solves the equation of motions simultaneously. The constructed model has some icons and associated parameters, therefore there are numerical values to be entered in the Matlab/Simulink model. The results are plotted by the help of graph icons which are shown in blue color in Fig. 5 on the right. Those five blue icons displays the results of vertical velocity change of aircraft (V_1), position or displacement of shock absorber (x_1), vertical acceleration of the aircraft (a_1) and as a multiplier of gravity (g_1), and most importantly F_1, Force acting on the mass m_1 (aircraft mass per landing gear).

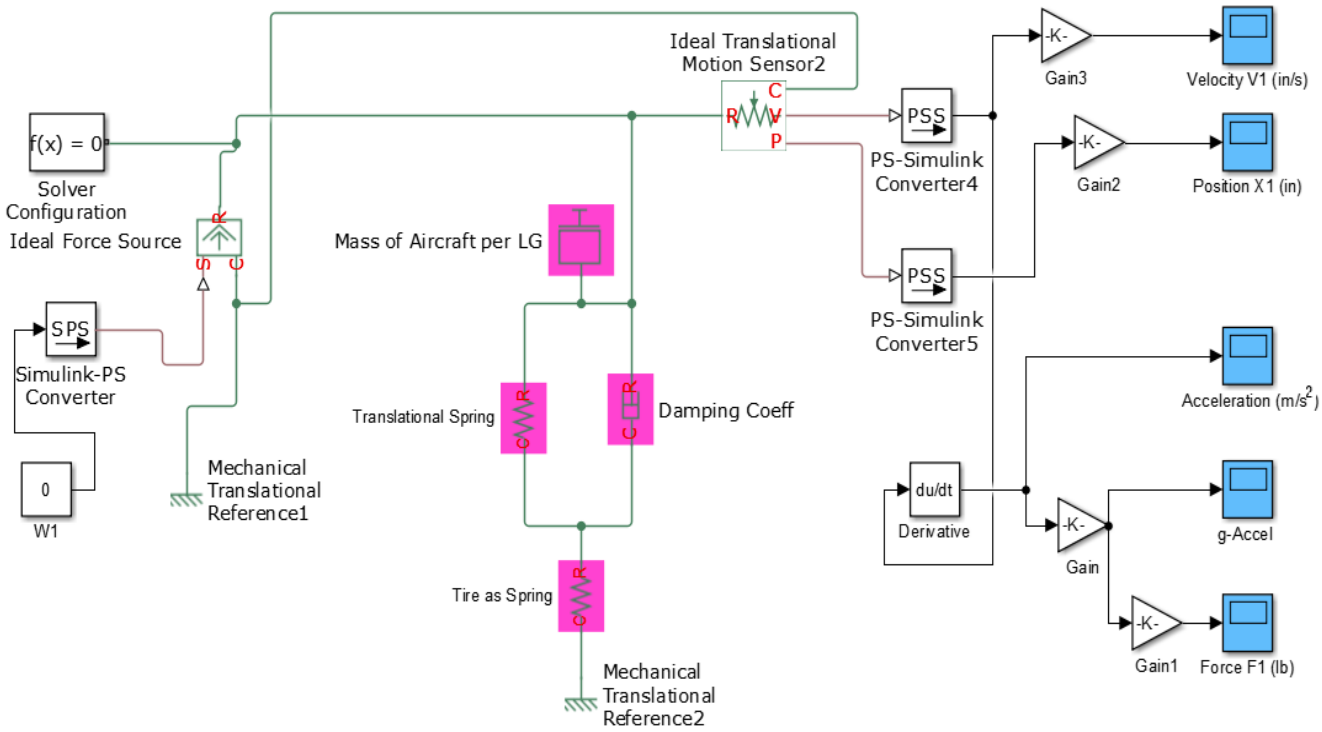

Fig. 5.Matlab/Simulink model for landing gear

C. Validation Case

For the validation purposes, numerical values to be input were chosen from Ref [3] as b: 500 lb.sec/in; k_1: 2800 lb/in; k_2: 12500 lb/in; m_1: 103.6 lb.sec^2/in; m_2: 0; V: 120 in/sec; W_1: 0 (weight minus lift force).

The results of the validation case matches with the results of [3]. The results of this study are presented in Fig. 6-9. F_1 force acting on aircraft was calculated and is show in Fig. 6. The maximum value of F_1 is equal to 56450 lb and it is around 0.13 seconds after landing. Minimizing F_1 force is important in the design of landing gears. Position or displacement of shock absorber (x_1) is shown in Fig. 7 and it starts from zero value at time zero and then it increases as the F_1 force increases, then reaches to a maximum value of 17.13 inches. This max value is important because the shock absorber has a design limit of displacement which should not be exceed. Fig. 8 shows vertical velocity of aircraft (V_1) which has an initial value of 120 in/s as input, then it decreases towards zero as landing occurs. Vertical acceleration of the aircraft in (a_1) starts from zero and it reaches 13.83 as maximum value (Fig. 9). Similarly vertical acceleration divided by gravity (g) reaches 13.83/9.81= 1.4 as maximum value.

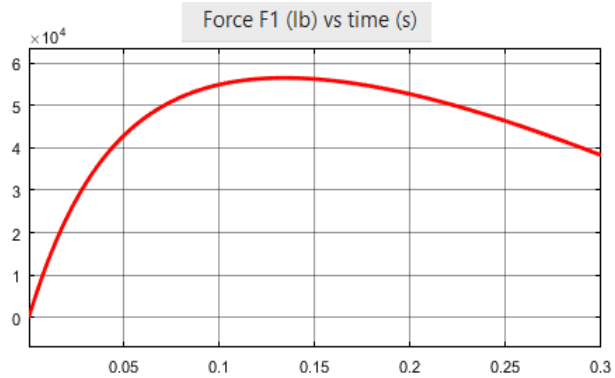

Force on aircraft vs. time (s)

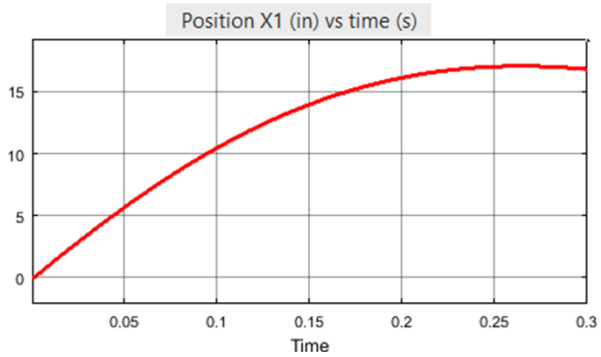

Fig. 6.Position or displacement of shock absorber vs. time (s)

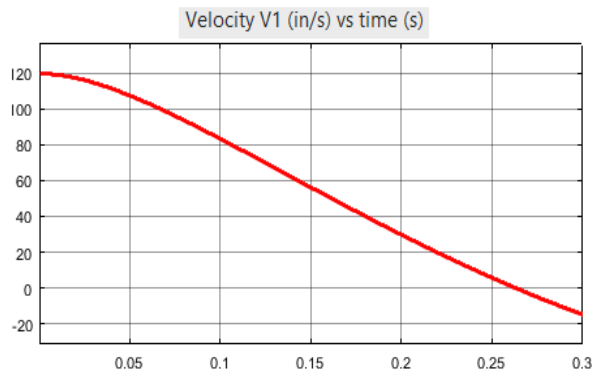

Fig. 7.Vertical velocity of aircraft vs. time (s)

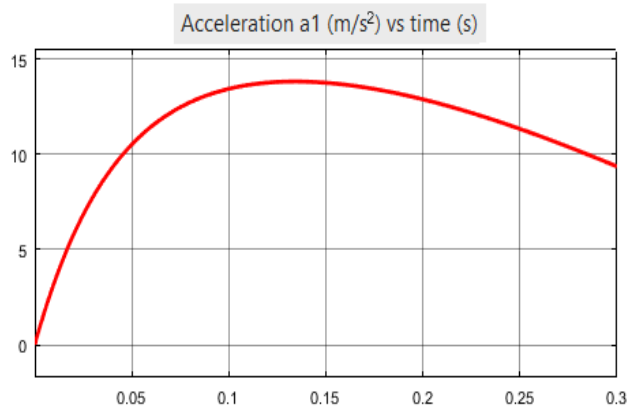

Fig. 8.Vertical acceleration of aircraft vs. time (s)

D. Sensitivity Study

After the validation case, it is worthy to investigate the effect of some input design parameters to see the result of output parameters. The input design parameters fed to the Simulink model were changed from baseline values ±10% each, to see the effects on the results. The input design parameters considered for this purpose are as follows:

b : shock absorber damping coefficient
k_1 : shock absorber spring constant
k_2 : tire spring constant

Table I shows the summary of this study with input and output parameters. The selected input parameters were changed for ±10% values, meaning 2 run cases for each. It makes 6 cases total for 3 parameters and also a baseline case for reference.

In order to evaluate the results in Table I, Fig. 10-12 was drawn for illustrative purposes. The effect of shock absorber damping coefficient (b) on results is shown in Fig.10. Shock absorber damping coefficient is proportional to the force and acceleration of aircraft, however it is inversely proportional to the displacement of the shock absorber, meaning that it has to absorb the impact energy in a shorter displacement. Shock absorber spring constant (k_1) and tire spring constant (k_2) have similar effects on results of force and displacement (Fig. 11 and Fig. 12).

Table- I: Sensitivity Study of Selected Design Parameters

Case Number	Input Design Parameters						Output Parameters					
	b (lb.sec/in)	Change	k_1 (lb/in)	Change	k_2 (lb/in)	Change	max x_1 (in)	Change	max a_1 (m/s^2)	Change	max F_1 (lb)	Change
Baseline	500		2800		12500		17.13		13.83		56450	
1	**450**	-10%	2800		12500		17.63	2.92%	13.34	-3.54%	54440	-3.56%
2	**550**	10%	2800		12500		16.67	-2.69%	14.35	3.76%	58570	3.76%
3	500		**2520**	-10%	12500		17.37	1.40%	13.52	-2.24%	55190	-2.23%
4	500		**3080**	10%	12500		16.91	-1.28%	14.15	2.31%	57740	2.29%
5	500		2800		**11250**	-10%	17.55	2.45%	13.7	-0.94%	55900	-0.97%
6	500		2800		**13750**	10%	16.77	-2.10%	13.95	0.87%	56910	0.81%

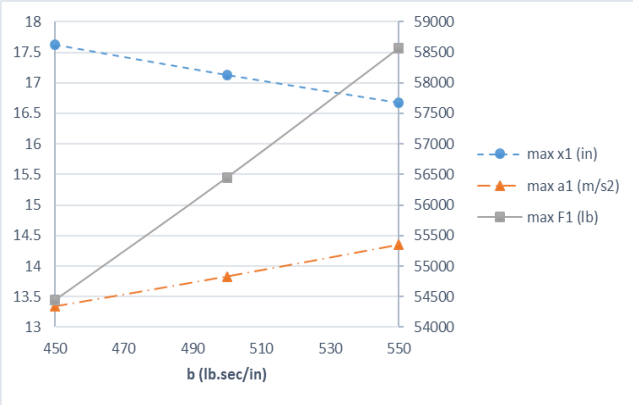

Fig. 9.Effect of shock absorber damping coefficient (b)

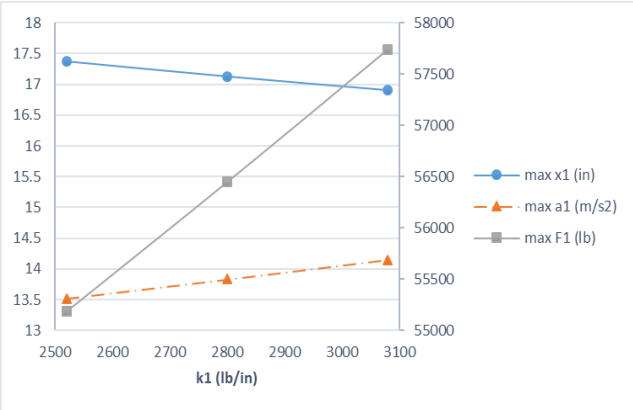

Fig. 10. Effect of shock absorber spring constant (k_1)

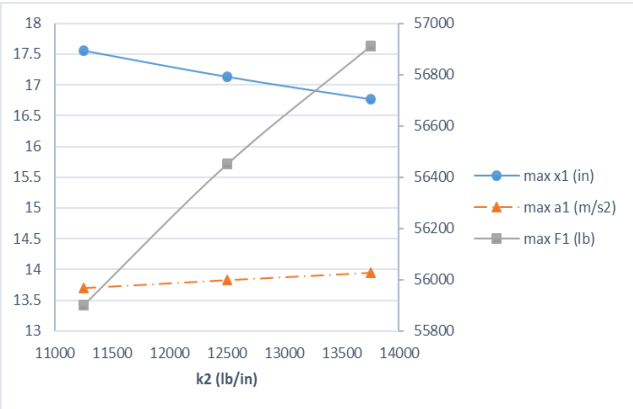

Fig. 11. Effect of tire spring constant (k_2)

V. CONCLUSION

In this study, a model of landing gear and shock absorber using related spring-mass-damper elements was constructed. The results are shown and discussed for given cases. The below points can be concluded from the study:

1) Landing gears can be modeled as spring-mass-damper systems
2) Dynamic equations of motions can be derived and solved simultaneously
3) Matlab/Simulink is a good tool to model and solve similar problems
4) F_1, force acting on the aircraft is heavily dependent on design parameters to be selected such as shock absorber damping coefficient (b), shock absorber spring constant (k_1) and tire spring constant (k_2)
5) As shock absorber damping coefficient (b) decreases, impact force F_1 also decreases and displacement of shock absorber (x_1) increases. Effect of damping coefficient (b) on impact force was found to be 3.76% for a change of ±10% in b.
6) If shock absorber spring constant (k_1) increases, impact force F_1 increases and displacement of shock absorber (x_1) decreases. Effect of spring constant (k_1) on impact force was found to be 2.29% for a change of ±10% in k_1.
7) Tire spring constant (k_2) increases, impact force F_1 increases and displacement of shock absorber (x_1) decreases. Effect of spring constant (k_2) on impact force was found to be 0.97% for a change of ±10% in k_2.

REFERENCES

1. H.G. Conway, Landing Gear Design. Chapman & Hall, 1958
2. N.S. Currey, Aircraft Landing Gear Design Principles and Practices AIAA Education Series,1988
3. W. Flugge, Landing Gear Impact, NACA, TN2743, 1952
4. B. Milwitzky, F.E. Cook, "Analysis of Landing-Gear Behavior", NACA, TN1154, 1953
5. B. Milwitzky, F.E. Cook, "Analysis of Landing-Gear Behavior", NACA, TN2755, 1953
6. T. Niezgoda , J. Malachowski and W. Kowalski, "Selection of Dynamics Characteristics for Landing Gear with the Use of Numerical Model", International Design Conference – Design, Dubrovnik, 2002
7. L. Son, M. Bur and M. Rusli "A new concept for UAV landing gear shock vibration control using pre-straining spring momentum exchange impact damper", Journal of Vibration and Control Vol. 24(8) 1455–1468, 2018
8. F.A.C. Viana, V. Steffen Jr, M.A.X. Zaninib, S. A. Magalhaes and L.C.S. Goes, "Identification of a non-linear landing gear model using nature-inspired optimization", Shock and Vibration 15, 257–272, 2008
9. Jenkins, S. F. N., Landing Gear Design and Development. Proceedings of the Institution of Mechanical Engineers, Part G: Journal of Aerospace Engineering, 203(1), 67–73, 1989 https://doi.org/10.1243/PIME_PROC_1989_203_055_01
10. Yadav, D., and Ramamoorthy, R. P. , "Nonlinear Landing Gear Behavior at Touchdown." ASME. J. Dyn. Sys., Meas., Control. December 1991; 113(4): 677–683. doi: https://doi.org/10.1115/1.2896474