International Journal of Recent Technology and Engineering (IJRTE)
ISSN: 2277-3878 (Online), Volume-8 Issue-4, November 2019

# Optimization Methods to Improve Energy Efficiency of Centrifugal Pumps at Thermal Power Plants

**A.A. Vikhlyantsev, A.V. Naumov, A.V. Volkov, A.A. Druzhinin, A.K. Lyamasov, S.N. Pankratov, B.M. Orahelashvily**

***Abstract*:*This article considers the application of engineering optimization methods as a way to improve the energy efficiency of centrifugal pumps operated in thermal power plants taking into account the pump load diagram. The authors present an algorithm of engineering optimization of the wetted part of impeller being an individual working body of a centrifugal pump, as well as the results of approbation of the proposed approach for the centrifugal pump KM 65-50-160 designed in two optimized versions taking into account various options of the pump load diagram. It is revealed that the application of engineering optimization methods allows achieving higher energy efficiency indicators even in a significantly simplified formulation of the problem under consideration. According to the calculation results, when the pump operation condition is met, the KM 65-50-160 pump with an optimized wetted part of the impeller designed in two versions has higher average integral efficiency in comparison with its counterpart designed according to classical methods, namely, 52.24% vs. 49.18%, and 57.9% vs. 57.02%, respectively.***

***Keywords*: *thermal power plant, centrifugal pump, wetted part of the pump, optimization, impeller, energy efficiency.***

## I. INTRODUCTION

The pump fleet for the thermal power plants (TPP) includes a wide list of pumps (Fig. 1). Centrifugal and axial pumps of various designs are used depending on the purpose, operation features, type of pumped liquid, and operation parameters at the TPP. These are low, medium, and high-pressure centrifugal pumps; single-stage pumps with one-way and two-way suction, single- and multistage pumps for clean water, etc.

According to the purpose, centrifugal pumps for TPP are divided into two groups:

– pumps of the main technological purpose (feed pumps, booster pumps, condensate pumps, drainage pumps, circulation pumps, network pumps, and makeup pumps).

– auxiliary pumps (process water pumps, fire pumps, chemical cleaning pumps, washing pumps, etc.) [1].

The main factor for such pumps is their performance, i.e. ensuring the required head at a given water feed. In addition, an important indicator is energy efficiency, determined by the energy characteristics of the pumps used in general, as well as their load diagrams, i.e. operation cyclograms in a particular flow rate regime.

Manuscript published on November 30, 2019.
* Correspondence Author
**A.A. Vikhlyantsev***, National Research University 'MPEI' (NRU 'MPEI'), Moscow,Russia.
**A.V. Naumov**, National Research University 'MPEI' (NRU 'MPEI'), Moscow,Russia.
**A.V. Volkov**, National Research University 'MPEI' (NRU 'MPEI'), Moscow,Russia.
**A.A. Druzhinin**, National Research University 'MPEI' (NRU 'MPEI'), Moscow,Russia.
**A.K. Lyamasov**, National Research University 'MPEI' (NRU 'MPEI'), Moscow,Russia.
**S.N. Pankratov**, National Research University 'MPEI' (NRU 'MPEI'), Moscow,Russia.
**B.M. Orahelashvily**, National Research University 'MPEI' (NRU 'MPEI'), Moscow,Russia.

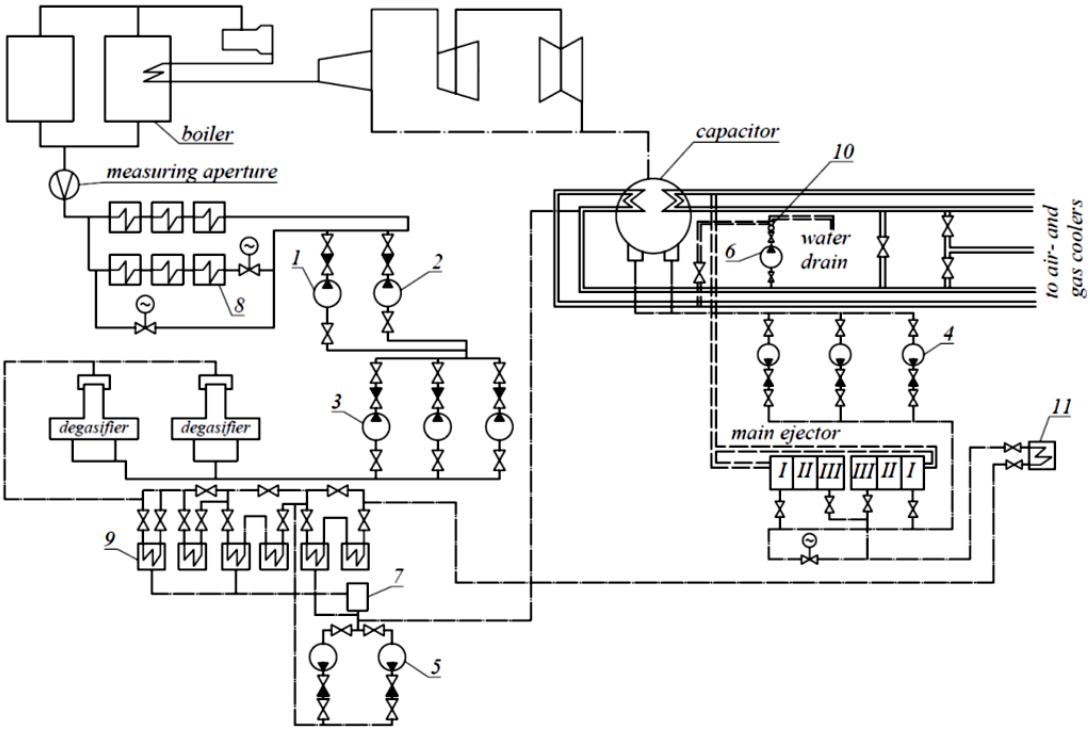


**Fig. 1: Schematic diagram of the TPP power unit:**
**1-turbine feed pump; 2-startup and standby feed pump; 3-primary pumps; 4-condensate pumps; 5-drainage pumps; 6-circulating water pump; 7-expansion tank; 8-high-pressure feedwater heater; 9-low-pressure feedwater heater; 10-starting ejector; 11-gas cooler.**

At present, the pumping equipment fleet for TPP in the Russian Federation and CIS countries is very worn out and requires modernization, replacement, or repair. The main directions of their improvement are increasing reliability (time to failure), durability (resource), and energy efficiency (average integral efficiency which takes into account the nature of the pump load). As can be seen from the publications dealt with these issues, the increase in the energy efficiency of centrifugal pumps of large energy facilities has recently become increasingly relevant due to the moral and physical obsolescence of equipment and the implementation of new technological process control schemes in energy production. The improvement of approaches to the design of centrifugal pumps, new design solutions, as well as the integration of search algorithms into well-established domestic and foreign *Computer-Aided Design (CAD)* and *Computation Fluid Dynamics (CFD)* environments [2-6] are today the main trends in pump construction, aimed at solving indicated problems. Using built-in tools, such as *AutoCAD, SolidWorks, FlowVision, ANSYS CFX*, etc. in conjunction with the multidimensional optimization methods [7-8] allows manufacturers of pumping equipment to reach a qualitatively new level.

However, the development of flexible and low resource-intensive tools and mathematical algorithms allowing automating the design process at a minimal cost of computer resources, as well as accumulation of statistics on the design of various type pumps, and data classification and synthesis are the most demanded and quite promising development directions in the field of pump building. One of these tools is engineering optimization methods.

## II. PROPOSED METHODOLOGY

### A. Block diagram

One of the most proven ways to solve the problems of increasing the efficiency of centrifugal pumps for TPP is engineering optimization methods which include methods of variational calculus, multidimensional optimization, the experiment planning theory, as well as methods for solving direct problems of hydrodynamic analysis in three-dimensional (3D) formulation. In the framework of the presented work, the application of engineering optimization methods is considered on the example of the wetted part of one of the main working bodies of the pump, namely, the impeller.

In general, formulation of engineering optimization of the object (Fig. 2) which is characterized by the array of varied parameters $\mathbb{X} = \{x_1, x_2 \dots x_n\}$, is reduced to the determination of the control action $\mathbb{G} = \{\bar{V}(\bar{R}), \bar{W}(\bar{R}), \bar{V}_u(\bar{R}) \dots \bar{V}_m(\bar{L})\} = f(n_s, Q_d)$ which under the given constraints $\mathbb{O}$ provides the required performance target $\mathbb{Y}$, such as for example the efficiency, and the achievement of the extremum of the functional $\Phi$, for example, minimum of the average integral hydraulic losses $\bar{h}_h$ [9] or maximum of average integral efficiency $\bar{\eta}$.

At that, the elements of the wetted part of the centrifugal pump which are represented as a set of spatial 3D current lines are shaped according to certain velocity distribution laws along the coordinates $\bar{R}$ and $\bar{L}$: $\bar{V}(\bar{R}), \bar{W}(\bar{R}), \bar{V}_u(\bar{R})$ nd $\bar{V}_m(\bar{L})$, whose mathematical form is determined by the rated pump flow $Q_d$ and it's delivery rate $n_s$, where $\bar{V}, \bar{W}, \bar{V}_u, \bar{V}_m$ are the dimensionless kinematic parameters of the flow; $\bar{R} = \frac{R-R_{in}}{R_{out}-R_{in}}$ is the dimensionless radius-coordinate $R$ (in cylindrical coordinates) of the point lying on the current line, whose origin coordinate is $R_{in}$ and the end coordinate is $R_{out}$ ; $\bar{L} = \frac{L-L_{in}}{L_{out}-L_{in}}$ is the dimensionless coordinate $L$ along the curved axis that coincides with the average current line, whose origin coordinate is $R_{in}$, and the end coordinate is $R_{out}$. The use of the flow kinematic parameters $\bar{V}, \bar{W}, \bar{V}_u, \bar{V}_m$ dependant on the coordinates $R$ and $L$ as a control action is physically more justified, since it is exactly these parameters that determine the hydraulic losses in the elements of the wetted part of the centrifugal pump, and as a consequence, its energy indicators. This also significantly speeds up the optimization process by eliminating intermediate calculations. For the impeller, the main control actions are $\bar{V}_u(\bar{R})$ and $\bar{V}_m(\bar{L})$.

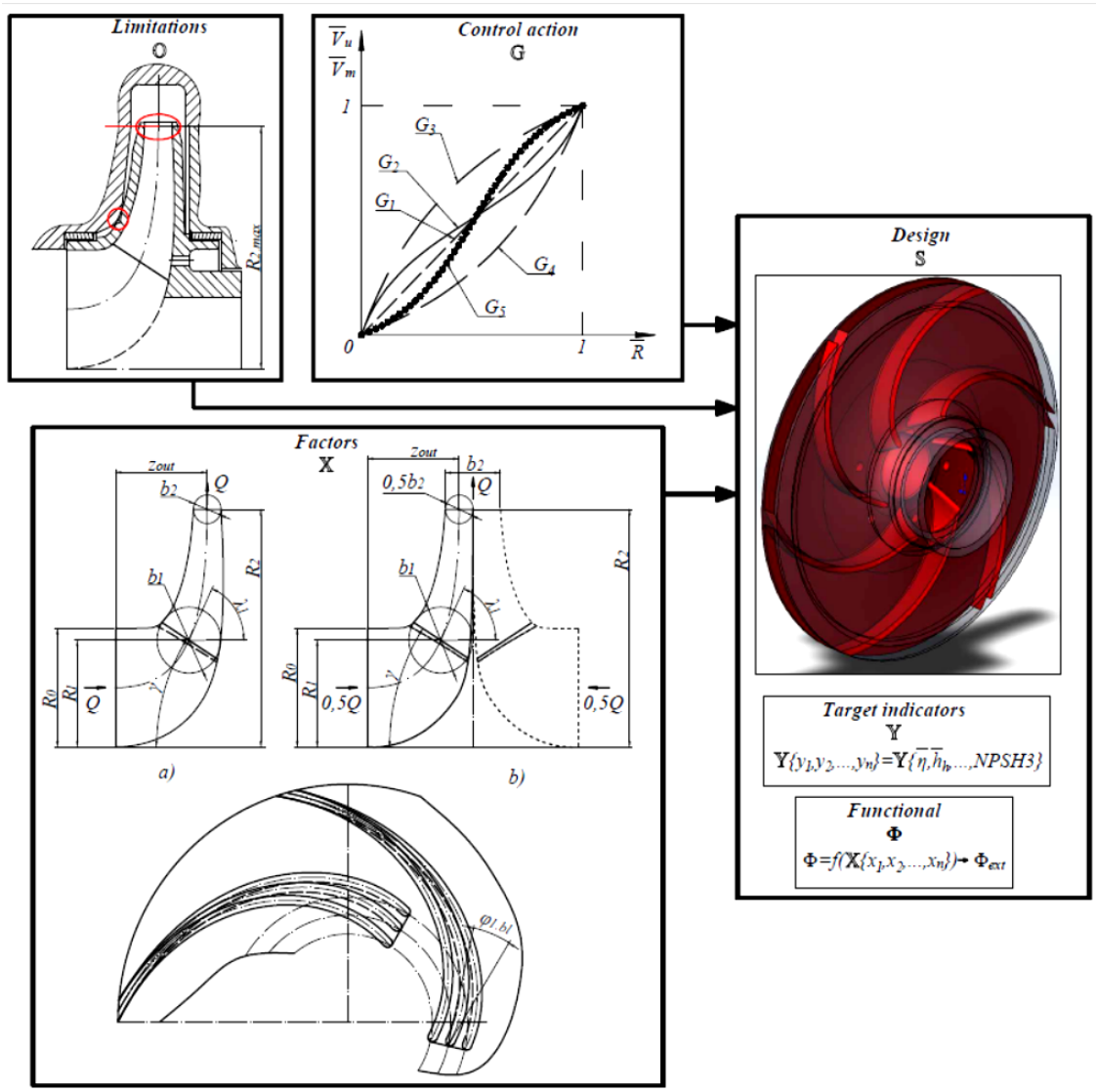


**Fig. 2: Block diagram of engineering optimization of the centrifugal pump impeller**

To improve the optimization quality and calculation accuracy with respect to intermediate experimental verification, the considered problem of engineering optimization should be performed in two stages:

1. Carrying out experimental verification of the calculation model and obtaining the first approximation based on the linear control action 𝔾 (Fig. 3a);

Conducting analysis of the influence trends of nonlinear control action 𝔾 (Fig. 3b), searching for the extremum of the functional $\Phi$, and using the experiment planning theory, methods for solving direct problems of hydrodynamic analysis in 3D formulation, implemented in the right half-plane (RHP) of computational and numerical simulation, as well as multidimensional optimization methods.

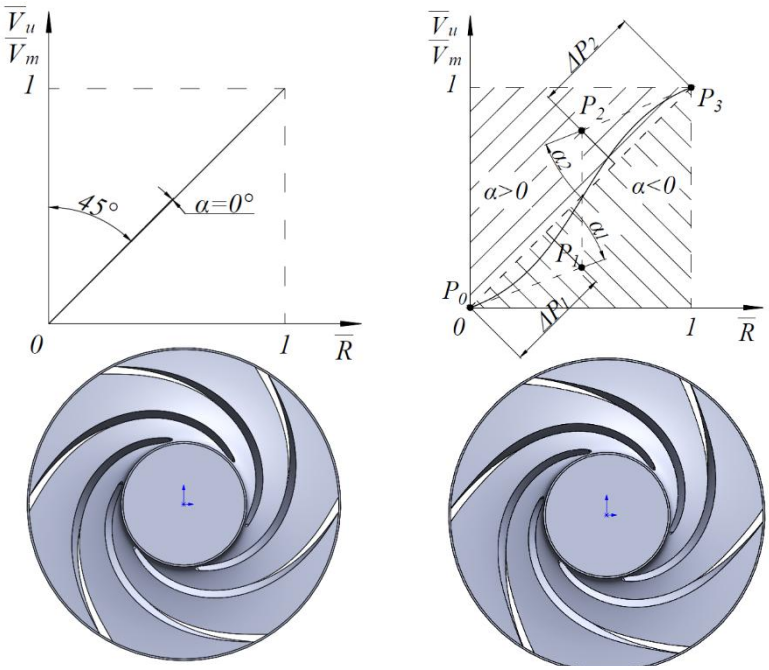


*a)* *b)*

**Fig. 3: Optimization of centrifugal pump impeller:**
**a) – obtaining the first approximation (the first stage); b) – analyzing the influence trends of the control action $\mathbb{G}$ (the second stage)**

## B. Algorithm

At the first stage, experimental verification of the calculation model is performed to ensure the required accuracy of predictive calculations of the energy parameters of the centrifugal pump being optimized. It is carried out at the beginning of the first stage if there are reliable results of bench tests of the counterpart pump, or at the end of the stage based on optimization results in the first approximation.The essence of optimization at this stage is to determine basic geometric parameters $\{\gamma, R_0, R_1, b_1, R_2, b_2\}$ (Fig. 4), optimal for linear dependencies $\overline{V}_u(\overline{R})$и$\overline{V}_m(\overline{L})$ (Fig. 3a), as well as the shape of the wetted part of the impeller, at which the main constraints are satisfied, and the functional (1) takes the minimum value.

$$\Phi = \sum_{i=1}^{n_1} \lambda_i h_{h_i}, \qquad (1)$$

where $n_1$ is the number of flow rate regimes which are used to estimate the average integral hydraulic losses; $\lambda_i$ is the weight coefficients corresponding to the flow rate regimes $Q$ (or $\bar{Q}$), such that $\sum_{i=1}^{n_1} \lambda_i = 1$. At that, $\lambda_i$ parameters are determined from the cyclogram of the centrifugal pump operation (water consumption graph); $\bar{Q} = \frac{Q}{Q_{pot}}$ is the dimensionless flow rate regime, and $Q_{pot}$is the nominal flow rate regime;

$$h_h = \frac{\sum_{j=1}^{n_2} \sum_{k=1}^{n_3+1} \left( \left( \zeta_{np_j} + \zeta_{kp_j} + \zeta_{вm_j} \right) \frac{W_{j,k}^2}{2g} + h_{y\partial_j} \right)}{n_2}$$

is the hydraulic losses in flow rate regimes $Q$ (or $\bar{Q}$),

$\zeta_{pr}, \zeta_{ed}, \zeta_{sec}$ are the coefficients of the profile, edge, and secondary losses, respectively;

$h_{sh_j}$ is the shock losses at the inlet to the blade system of centrifugal pump impeller;

$n_2$ is the number of current lines along which the surface of the wetted part element of the centrifugal pump is constructed;

$n_3$ is the number of discretization steps when calculating hydraulic losses on the *j-th* current line.

The relationship between the kinematic flow parameters $V_m, V_u, U, W$ and the geometric parameters of the impeller $b, \beta_{bl}, R$ can be established from the velocity triangles (Fig 3) and expressed by equations (2)-(5).

$$b = \frac{Q}{2\pi R V_m} \qquad (2)$$

$$U = \omega R, \qquad (3)$$

where $\omega = \frac{2\pi n}{60}$ is the angular velocity.

$$W = \sqrt{V_m^2 + (U - V_u)^2} \qquad (4)$$

$$\beta_{bl} = \text{atan}\left(\frac{V_m}{U - V_u}\right) \qquad (5)$$

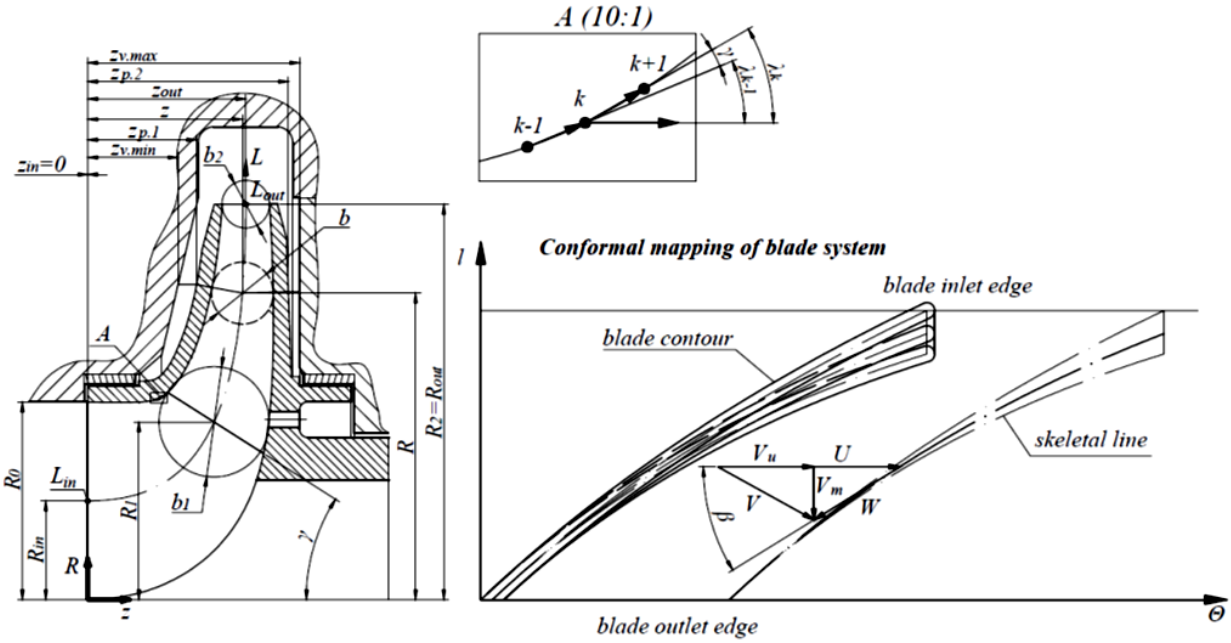


**Fig. 4: Illustration of the first stage of optimization of the wetted part of the centrifugal pump impeller.**

Two types of constraints can be classified: design constraints and centrifugal pump performance conditions.

The main design constraints are the limitations of the axial dimensions of the impeller (Fig. 4). These limitations are determined by the design of the housing manufactured according to the relevant GOST or ISO and can be written in the form of a system of equations (6).

$$\begin{cases} z_{p_1} \geq z_{v.min} \\ z_{p_2} \leq z_{v.max} \end{cases}, \qquad (6)$$

where $z_{p_1}$ and $z_{p_2}$ are the z coordinates of the outer contours of the impeller discs; $z_{v.min}$ and $z_{v.max}$ are the z coordinates of the outer contours of the housing walls.

Also, another design constraint known from the experience of designing centrifugal pumps is a smooth change in the outlines of the walls without kinks, i.e. with a constant sign of the current line curvature coinciding with the wall. Verification of this restriction can be performed discretely by the penalty functions method (7):

$$\mathbb{O} = 0, \qquad (7)$$

where $\mathbb{O} = c\sum_{k=1}^{n_3+1} \mathbb{o}_k$ is the global constraint;

$\mathbb{o} = \begin{cases} 0, at\gamma \geq 0 \\ \gamma^2, at\gamma < 0 \end{cases}$ are local constraints at the *k-th* point (Fig. 4); $c$ is the penalty parameter.

The condition of the functional ability of the centrifugal pump (8) is formulated as ensuring the head *H* not lower than the nominal value $H_{nom}$ in the nominal regime of the pump on the supply of $Q_{flow}$ ($\bar{Q} = 1$), but not exceeding $H_{nom}$ by more than δ%.

$$H \geq (1 \div (1 + 0{,}01\delta))H_{nom} \qquad (8)$$

The basic equation of a centrifugal pump is described by equation (9), while the relationship between the theoretical head $H_t$ and *H* is expressed by equation (10):

$$H_t = \frac{\omega(R_2 V_{u2} - R_1 V_{u1})}{g} \qquad (9)$$

$$H = H_t \eta \quad , \qquad (10)$$

where $\eta_h$ is the hydraulic efficiency in nominal flow rate regime, determined by the empirical formula (11), and then refined by the calculation results $h_h$ at $\bar{Q} = 1$ ; $V_{u1}$, and $V_{u2}$ are the circumferential components of the absolute velocity, respectively, at the inlet and outlet of the impeller. In the absence of flow swirl at the inlet, $V_{u1} = 0$, while $V_{u1}$ and $V_{u2}$ correspond to dimensionless parameters $\bar{V}_u = 0$ and $\bar{V}_u = 1$.

$$\eta_г = 1 - \frac{0.42}{\left(\lg\left(4.5\sqrt[3]{\frac{Q_{cal}}{n}}\right) - 0.172\right)^2} \qquad (11)$$

Given the basic geometric parameters $\{\gamma, R_0, R_1, b_1, R_2, b_2\}$ , and taking into account the equations (2)-(5) and (9)-(11), the condition of functional ability (8) can be expressed by equation (12):

$$ctg(\beta_{bl}) \leq \frac{2\pi R_2 b_2}{Q}\left(\omega R_2 - \frac{\frac{g}{\omega\eta_г}(1 \div (1+0{,}01\delta))H_{nom} + R_1 V_{u1}}{R_2}\right) \qquad (12)$$

At the second stage, the first approximation is modified due to various nonlinear control actions of $\mathbb{G}$ with the involvement of the experiment planning theory at the unchanged basic geometric parameters {γ, $\{\gamma, R_0, R_1, b_1, R_2, b_2\}$. A convenient mathematical form to describe the control action, which allows obtaining the most compact matrix of a multilevel fractional-factor experiment [10], is the polynomial one. The 3rd order Bezier polynomial allows covering a wide range of possible solutions and simulating five different dependencies for $\bar{V}_u(\bar{R})$ and $\bar{V}_m(\bar{L})$ with a minimum number of factors. At that, one can consider both exclusive modifications of the impeller blade system due to the control action $\bar{V}_u(\bar{R})$ with a reduced set of factors, for example (13),

and modification of the entire wetted part of the impeller due to the combination of control actions $\bar{V}_u(\bar{R})$ and $\bar{V}_m(\bar{L})$with a full set of factors (14):

$$\mathbb{X} = \{x_1, x_2, x_3, x_4\} = \{\alpha_{1_{Vu}}, \alpha_{2_{Vu}}, \Delta R_{P1_{Vu}}, \Delta R_{P2_{Vu}}\} \quad (13)$$

$$\begin{cases} \mathbb{X} = \{\mathbb{X}_1, \mathbb{X}_2\} \\ \mathbb{X}_1 = \{x_{1_1}, x_{1_2}, x_{1_3}, x_{1_4}\} = \\ \{\alpha_{1_{Vu}}, \alpha_{2_{Vu}}, \Delta P1_{Vu}, \Delta P2_{Vu}\} \\ \mathbb{X}_2 = \{x_{2_1}, x_{2_2}, x_{2_3}, x_{2_4}\} = \\ \{\alpha_{1_{Vm}}, \alpha_{2_{Vm}}, \Delta P1_{Vm}, \Delta P2_{Vm}\} \end{cases} \quad (14)$$

Moreover, since the graphs are presented in dimensionless form, the limit values of the factors will be assigned within the ranges $x_{1,2_{1,2}} = -45° \div +45°$ and $x_{1,2_{3,4}} = 0 \div \frac{0.5\sqrt{2}}{1+tg(x_{1,2_{1,2}})}$ that simplifies the transition towards a standardized kind of variables (15):

$$\bar{x}_i = \frac{x_i - x_i^0}{\Delta x_i}, \quad (15)$$

where $x_i^0 = 0.5(x_{i_{max}} + x_{i_{min}})$ is the basic level;

$\Delta x_i = 0.5(x_{i_{max}} - x_{i_{min}})$is the variation step of the factor.

After constructing the matrix of experiment and preparation according to the matrix of the first approximation modifications, calculation and numerical simulation in a 3D statement are carried out, as well as the evaluation of the obtained results based on the values of functional (1), and the search for the optimal control action and the corresponding configuration of the centrifugal pump impeller using one of the multivariate optimization methods.

It is convenient to use dependencies (2)-(5) between the kinematic parameters of the flow and the geometric parameters of the impeller to perform automated/semi-automated construction of 3D computational models.

It should be noted that there is no fundamental difference between the application of the presented algorithm of engineering optimization for impellers of single- and multistage pumps with one-way (type B, Ks, K, KM) and two-way inlet (type D). As can be seen from Fig. 2, when optimizing the impellers of pumps with two-way inlet, one half of the wetted part can be optimized for a flow rate half of the total $\bar{Q}' = 0.5\bar{Q}$. The second half of the wetted part of such an impeller is symmetrical to the first one.

## III. RESULTS ANALYSIS

The presented approaches were tested through engineering optimization of individual elements of the wetted part of an overhung centrifugal pump with a one-way inlet impeller KM 65-50-160 (power-speed coefficient $n_s$=85). The main requirement for this type pump was to improve energy efficiency upon meeting the following operation conditions: providing a head $H_{nom}$=32 m at a feeding flow rate $Q_{nom} = 25\ \mathrm{m^3/h}$. According to the algorithm described above, at the first stage, the calculation model was verified based on the results of bench tests of the serial pump KM 65-50-160 with two different impellers. The calculations have shown good convergence of experimental and calculated power characteristics (Figs. 5a and 5b). At that, the relative errors in head and efficiency in the nominal feed regime were δH=4.2% and δη=2.45%, respectively, which was within acceptable values.

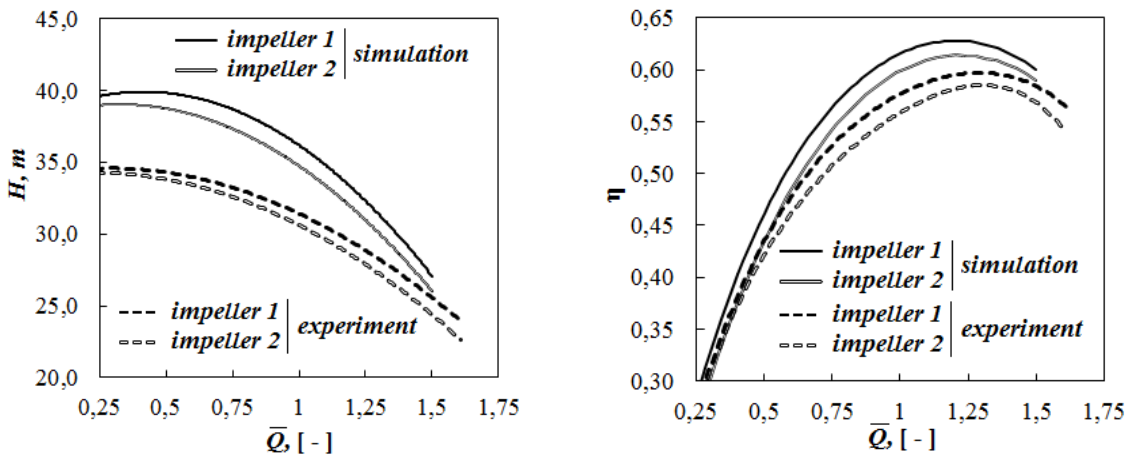


*a)* *b)*

**Fig. 5: Experimental verification results of the calculation model of centrifugal pump KM 65-50-160 with different impellers: a) head-capacity characteristic; b) efficiency characteristics.**

After verification of the calculation model, two options of the KM 65-50-160 pump were optimized to operate under different load diagrams (Fig. 6) over a time interval $\bar{\tau}_0 = 1$, where $\bar{\tau}_0 = \frac{\tau}{\tau_0}$ was the total operating cycle time in dimensionless form, $\bar{\tau}_0$ was the operating cycle time in dimensional form, and τ was the current operating cycle time in dimensional form. The weight coefficients $\lambda_i$ for determining the functional values (1) were assigned based on the analysis of the load diagrams for the main flow rate regimes of the pump $\bar{Q}$.

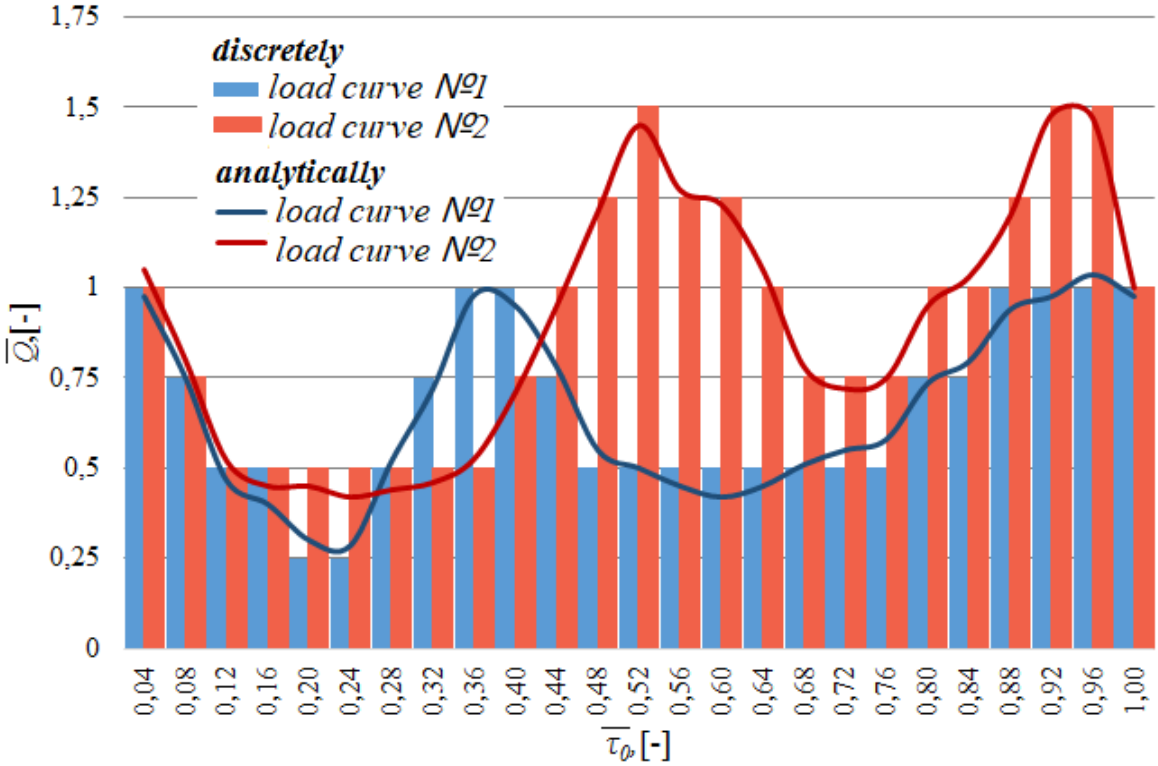


**Fig. 6: Load diagram of KM 65-50-160 pump**

Initially, the first approximation was obtained. Further, to study the influence of nonlinear control actions, the first optimization path associated with the change of the blade system only, i.e. $\bar{V}_u(\bar{R})$, was chosen. The reduced set of factors included two parameters: $\alpha_{1_{Vu}}$and$\alpha_{2_{Vu}}$for which the maximum and minimum values were set equal to +22.5° and -22.5°, respectively. Parameters $\Delta R_{P1_{Vu}} and \Delta R_{P2_{Vu}}$ were assumed to be constant $\Delta R_{P1_{Vu}} = \Delta R_{P2_{Vu}} = 0.4$ . With this assumption, a matrix of the two-level two-factor experiment was compiled (Table 1), as well as computational and numerical simulation was performed within the range of flow rates $\bar{Q} = 0.25 \div 1.50$, and the search for optimal solutions in accordance with the expected operating conditions (Fig. 6) was conducted based on the functional values in the vertices of the simplex, of which each corresponded to its experiment number (Table 1). The average integral efficiency of the centrifugal pump $\bar{\eta}$ was adopted as a functional, which was determined as the weighted average efficiency of the pump according to the results of numerical simulation in different flow rate regimes $\bar{Q}$.

According to the results of the study, the two most energy-efficient options of the KM 65-50-160 pump with optimized impellers (Fig. 8a) with nonlinear distribution $\bar{V}_u(\bar{R})$ (Fig. 7b) were obtained meeting their operating conditions. For comparison, Figs. 8c-8d present the design characteristics $\eta(Q)$ofthe KM 65-50-160 pump with an impeller designed according to classical methods [11] (Table 1).

**Table 1: Experiment matrix of the KM 65-50-160 pump for operation in hydraulic system No. 1**

| No | Factors𝕏 | | Φ ($\bar{\eta}$) | |
|---|---|---|---|---|
| | $x_1$ ($\alpha_{1_{Vu}}$) | $x_2$($\alpha_{2_{Vu}}$) | Load diagramNo.1 | Load diagramNo.2 |
| The classical designing methods | | | | |
| - | - | - | 49.18 | 57.02 |
| Optimization (1st stage) | | | | |
| - | 0 (0°) | 0 (0°) | 50.54 | 57.62 |
| Optimization (2nd stage) | | | | |
| 1 | -1[1] (-22.5°) | -1 (-22.5°) | 47.54 | 55.89 |
| 2 | -1 (-22.5°) | +1 (+22.5°) | 52.24 | 57.49 |
| 3 | +1 (+22.5°) | -1 (-22.5°) | 48.98 | 56.49 |
| 4 | +1 (+22.5°) | +1 (+22.5°) | 51.89 | 57.90 |

[1]"+1" and "-1" are the upper and lower limits of the factors variation range, presented in dimensionless (standardized) form

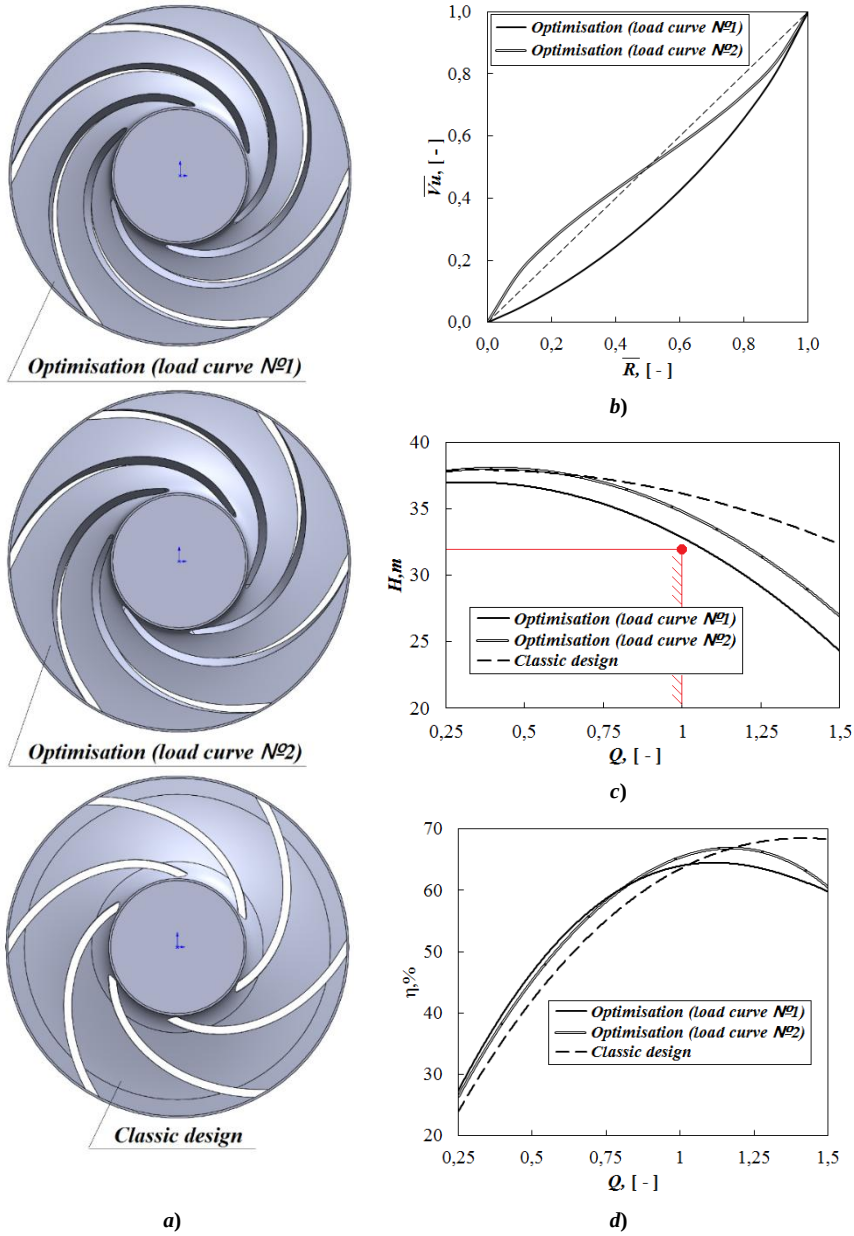


**Fig. 7: Optimization results:**
**a) The 3D models of impellers; b) $\overline{V_u}(\overline{R})$distribution graphs (pump design with optimized impeller); c) head-capacity characteristics; d) efficiency characteristics.**

Analyzing the results presented in Fig. 8, one can conclude that the application of engineering optimization methods allows obtaining higher performance indicators as compared with classical approaches to design, even in a significantly simplified formulation of the problem upon meeting the functional ability conditions. Thus, according to the calculation results, the first version of the optimized pump, adapted to operate according to the load schedule No. 1, has an average integral efficiency of 52.24% against 49.18% of the conventional pump designed in the classical manner [11]. The second version of the optimized pump, adapted to operate according to the load schedule No. 2, has an average integral efficiency of 57.9% against 57.02 % [11].

## IV. CONCLUSION

The following results have been obtained in consequence of the conducted work:

- The application of engineering optimization methods as a flexible tool for the development of energy-efficient centrifugal pumps for TPP was considered taking into account the individual characteristics of their operating conditions (load schedules).
- The proposed approaches have been tested with respect to KM 65-50-160 pump.
- Optimization of the KM 65-50-160 pump with impellers designed in two versions was carried out based on variations of the distribution law of the circulating component of absolute velocity $\overline{V_u}(\overline{R})$, taking into account various loading options.
- Based on the calculation results, the average integral efficiency of the optimized KM 65-50-160 pump has been increased in comparison with the efficiency of a pump with conventional design even in a significantly simplified formulation of the optimization problem.

The optimized pump KM 65-50-160 designed to operate in accordance with the load diagram No.1 has higher average integral efficiency equal to 52.24% vs. 49.18% of the pump designed according to classical method [11], while the pump optimized to operate in accordance to the load diagram No. 2 has efficiency equal to 57.9% vs. 57.02%, respectively. At that, both optimized versions of the pump meet the condition of functional ability, namely, providing a head $H_{nom}=32\ m$ at a nominal water supply $Q_{nom}=25\ m^3/h$.

## ACKNOWLEDGMENT

The work was carried out with the support of the Ministry of Science and Higher Education of the Russian Federation in the framework of the research under the grant No. MK-6466.2018.8 (Agreement No. 075-15-2019-588 of June 11, 2019).

## REFERENCES

1. G.A. Lokalov, V.M. Markovsky, ‘Osevye i centrobezhnye nasosy teplovyh elektricheskih stancij” [Axial and centrifugal pumps of thermal power plants]. Ekaterinburg: Ural University, 2016.
2. A.A. Zharkovskii, R.I. Kazakov, V.L. Pleshanov, V.A. Umov, “The TsN CAD system, submerged electric centrifugal pump design, and characteristic forecasting”, Chemical and Petroleum Engineering, 37(5-6), 2001, pp. 285-289.
3. M. Checcucci, A. Schneider, M. Marconcini, F. Rubechini, A. Arnone, L. De Franco, M.A. Coneri, “A novel approach to parametric design of centrifugal pumps for a wide range of specific speeds”. Proceedings of the 12th International Symposium on Experimental and Computational Aerothermodynamics of Internal Flows, 2015.
4. G.K. Borovin, A.I. Petrov, A.A. Protopopov, “Metodika i algoritm opredeleniya osnovnyh konstruktivnyh parametrov maloraskhodnogo centrobezhnogo nasosa” [Methodology and algorithm to determine the main design parameters of the low-flow centrifugal pump]. Preprints of the Keldysh Institute of Applied Mathematics. RAS, 2016, pp. 63-16.
5. A.Yu. Pospelov, A.A. Zharkovsky, “Ispol'zovanie 3D metodov dlya rascheta techeniya, prognozirovaniya harakteristik i optimizacii formy protochnyh chastej gidravlicheskih turbin” [The application of 3D methods to calculate the flow, predict the characteristics, and optimize the shape of the water passage of hydraulic turbines]. Hydrotechnical Construction, 11, 2014, pp. 36-41.
6. V.O. Lomakin, P.V. Shcherbachev, O.I. Tarasov, P.A. Pokrovsky, S.E. Semenov, A.I. Petrov, “Sozdanie parametrizovannyh 3D-modelej protochnoj chasti centrobezhnyh nasosov” [Creation of parameterized 3D models of the wetted part of centrifugal pumps]. Science and Education: Scientific edition of Bauman Moscow State Technical University, 4, 2012. Available at: http://technomag.edu.ru/doc/354657.html
7. P.S. Cheburko, V.O. Lomakin, M.S. Kuleshova, M.N. Baulin, “Kompleksnaya optimizaciya protochnoj chasti germetichnogo nasosa metodom LP-Tau poiska” [Comprehensive optimization of the wetted part of the hermetic pump by LP-Tau search method]. Pumps. Turbines. Systems, 1, 2016, pp. 55-61.
8. Gergel, V., Grishagin, V., and Gergel, A., 2016. Adaptive nested optimization scheme for multidimensional global search. Journal of Global Optimization, 66(1), pp. 35-51.
9. A.V. Volkov, A.G. Parygin, A.V. Naumov, A.A. Vikhlyantsev, A.A. Druzhinin, “Application of methods of the optimal control theory for the development of high-efficiency centrifugal pumps”. International Journal of Applied Engineering Research, 12(19), 2017, pp. 8768-8778.
10. N.I. Sidnyaev, Teoriya planirovaniya eksperimenta i analiz statisticheskih dannyh [Theory of experiment planning and statistical data analysis]. Moscow: Bauman Press, 2018.
11. A.A. Lomakin, “Centrobezhnye i osevye nasosy” [Centrifugal and axial pumps]. Moscow, Mechanical Engineering, 1966, p. 364.