International Journal of Recent Technology and Engineering (IJRTE)
ISSN: 2277-3878 (Online), Volume-8 Issue-4, November 2019

High-Quality MRI and PET/SPECT Image Fusion Based on Local Laplacian Pyramid (LLP) and Adaptive Cloud Model (ACM) for Medical Diagnostic Applications

J.Reena Benjamin, T.Jayasree, S.Anjana Vijayan

Abstract: ***Image fusion plays a major role in biomedical applications such as tumor detection, medical diagnostics, disease identification, etc. Generally, medical imaging modalities such as Positron Emission Tomography (PET)/Single Photon Emission Computed Tomography (SPECT) and Magnetic Resonance Images (MRI) are used to perform the fusion process for post-surgery analysis. MRI images generally have a single channel i.e. gray information about the skull.MRI images give anatomical data of soft tissues whereas PET/SPECT images give functional images of tissues. Therefore, combining MRI and PET/SPECT images give both structural as well as functional information. In this paper, a new approach for PET/SPECT and MRI image fusion using the Adaptive Cloud Model (ACM) based Local Laplacian Pyramid (LLP) is proposed to obtain the high quality fused output. To increase the sensitivity of the fusion, the RGB image is converted into Hue Intensity Saturation (HIS) color transform. LLP is applied to the gray level component of the MRI image and Intensity component of PET/SPECT images respectively. The Adaptive Cloud Model is used to perform the fusion of LLP coefficients. The inverse of LLP and HIS transform is applied to get the fused image in color domain. Performance evaluation shows that the proposed method gives better performance when compared to conventional techniques.***

Keywords: ***Local Laplacian Transform (LLP), Adaptive Cloud Model (ACM), Positron Emission Tomography (PET), Magnetic Resonance Imaging (MRI), Entropy, image fidelity, Visual Information Fidelity (VIF), Image Quality Evaluator (NIQE).***

I. INTRODUCTION

The image fusion process is characterized as collecting all the significant data from various images and their consideration into fewer pictures, typically a single one [1]. This single picture is more instructive and exact than any single source picture, and it comprises of all the vital data.

Manuscript published on November 30, 2019.
* Correspondence Author
J.Reena Benjamin*, Faculty, Department of ECE, Narayanaguru College of Engineering, TamilNadu, India. Email: reenaleeben@gmail.com
Dr.T.Jayasree, Faculty, Department of ECE, Government College of Engineering, Tirunelveli, TamilNadu, India.Email: jayasree@gcetly.ac.in.
S.Anjana Vijayan, Student, M.E Applied Electronics, Narayanaguru College of Engineering, TamilNadu, India. Email: vijayansanju1995@gmail.com

The motivation behind picture fusion isn't just to increase the measure of information yet additionally to build pictures that are increasingly proper and justifiable for human and machine perception. In computer vision, multi-sensor Image fusion is the way towards joining important data from at least two pictures into a solitary image. The subsequent picture will be more informative than any of the input pictures.

A good image fusion strategy has the accompanying properties. In the first place, it can save the majority of the valuable data of various images [2]. Second, it doesn't deliver artifacts that can distract or delude a human observer or any consequent image handling steps. Third, it must be dependable and powerful. At last, it ought not to dispose of any striking data contained in any of the information images. Image fusion has become a typical term utilized in medicinal diagnostics and treatment. The term is utilized when various images of a patient are enlisted and overlaid or converged to give extra data. Intertwined images might be made from various images from a similar imaging modality, or by consolidating data from different modalities, for example, Magnetic Resonance Image (MRI), Computed Tomography (CT), Positron Emission Tomography (PET) and Single Photon Emission Computed Tomography (SPECT) [3]. In radiology and radiation oncology, these images fill various needs. For instance, CT images are utilized to discover contrasts in tissue thickness while MRI images are commonly used to analyze cerebrum tumors. For precise analysis, radiologists must coordinate data from numerous image designs [4]. Melded, anatomically steady images are particularly useful in diagnosing and treating malignant growth. With the appearance of these new advancements, radiation oncologists can exploit force balanced radiation treatment. Having the option to overlay analytic images into radiation arranging images brings about increasingly exact target tumor volumes.

Computational imaging performs a significant job in the medical field; however conventional medical image fusion strategies just consider the fusion of two sorts of images, for example, CT-MRI, CT-PET, and MRI-PET [5]. Clearly, the fusion of at least three sorts of medical images could uncover progressively point by point data because of the copious correlative data contained in various types of medical images. Unfortunately, conventional medical image fusion techniques can't be directly used to accomplish this objective, since they can't fuse various features from at least three sorts of medical source images effectively.

It is notable that CT, MRI, and PET/SPECT images are usually utilized in medical imaging modalities. Explicitly, CT and MRI images are otherwise called structural medical images since they can give the structural data of organs. A CT image can plainly show the high-thickness tissue, an MRI image can unmistakably show the higher dampness content tissue, and a PET image can uncover the functional data of human tissue by means of a bogus color image [6].

Hence, multimodal medical image fusion can make the life systems and physiology characteristics of tissues simple to perceive and pass judgment, which is fundamental to restorative image investigation, clinical conclusion, treatment arranging and so on.

This paper, focus on the fusion of anatomical and functional images. In contrast to a single scale, multiscale analysis tool (MSA)-based fusion methods could extract important information at different scales. The rest of this paper is organized as follows. In Section II, prior work is briefly reviewed. Section III describes the proposed fusion method. The experiments are presented in Section IV. Finally, Section V provides a conclusion.

II. LITERATURE SURVEY

Benedetti, Paola, et al. proposed a start to finish deep learning system, to be specific M3 Fusion, which is ready to all the while influence the transient learning contained in time series information just as the fine spatial data accessible in VHSR pictures. M3Fusion demonstrates the ability to improve the results of the Greenhouse crop class [7]. Similar behavior is exhibited considering the bare rocks and Urbanized. Areas land cover classes.M3Fusion exploits the spatial context information (supplied by the SPOT6 image) to differentiate between the Greenhouse crop and Urbanized Areas classes. Tests did on the Reunion Island study region affirm the nature of our proposition considering both quantitative and subjective perspectives.

Jing Wang et.al. Proposed an adaptive decomposition method for multimodal medical image fusion. In this method, a new strategy is utilized to isolate the structural image into two layers: the smoothing layer and the surface layer. The high-recurrence data of the structural image is saved in the surface layer. Surface data assumes a significant job in disease analysis, which shows auxiliary subtleties. The functional image contains just low-recurrence data, lacking surface data [8]. The valuable data in the functional image is typically spoken by color. By recognizing the color data of the pixel, the zone where the data sum is huge can be isolated from the whole picture. Another dynamic fusion rule is utilized to combine the structural image and the functional image.

An improved multimodal sensor fusion methodology involving a cascaded fusion framework of SWT and NSCT domains is proposed by Vikrant Bhateja et.al. This paper presents a two-stage multimodal fusion framework using a cascaded combination of Stationary Wavelet Transform (SWT) and Non-Sub-Sampled Contourlet Transform (NSCT) domains for images acquired using two distinct medical imaging sensor modalities [9]. The first stage employs the Principal Component Analysis (PCA) algorithm in the SWT domain to minimize redundancy. The maximum fusion rule is then applied in the NSCT domain at the second stage to enhance the contrast of the diagnostic features.

A novel multimodality medical picture fusion algorithm which includes L0 Gradient Minimization Smoothing Function (GMSF) and Pulse Coupled Neural Network (PCNN) is proposed by Xingbin Liu et.al. A multi-scale edge-protecting decay system dependent on GMSF is utilized to decompose each source picture into one base picture and a progression of detail pictures. For extricating and saving progressively remarkable features and detail data, distinctive fusion rules are intended to combine the isolated sub-images [10]. The base pictures are intertwined utilizing the territorial weighted whole of pixel vitality and gradient vitality, and an organically enlivened criticism neural network is utilized to fuse the detail pictures. The last combined picture is gotten by blending the fused base picture and detail pictures.

A productive multimodal medical picture fusion approach dependent on compressive detecting is exhibited to combine CT and MRI images are proposed by Zhaodong Liu et.al. [11]. The critical scanty coefficients of CT and MRI pictures are gained by means of a multi-scale discrete wavelet transform. A weighted fusion rule is used to combine the high recurrence coefficients of the source medical pictures; while the Pulse Coupled Neural Network (PCNN) fusion rule is abused to fuse the low recurrence coefficients. Random Gaussian matrix is utilized to encode and quantify the fused image. The fused picture is remade by means of the Compressive Sampling Matched Pursuit algorithm (CoSaMP).

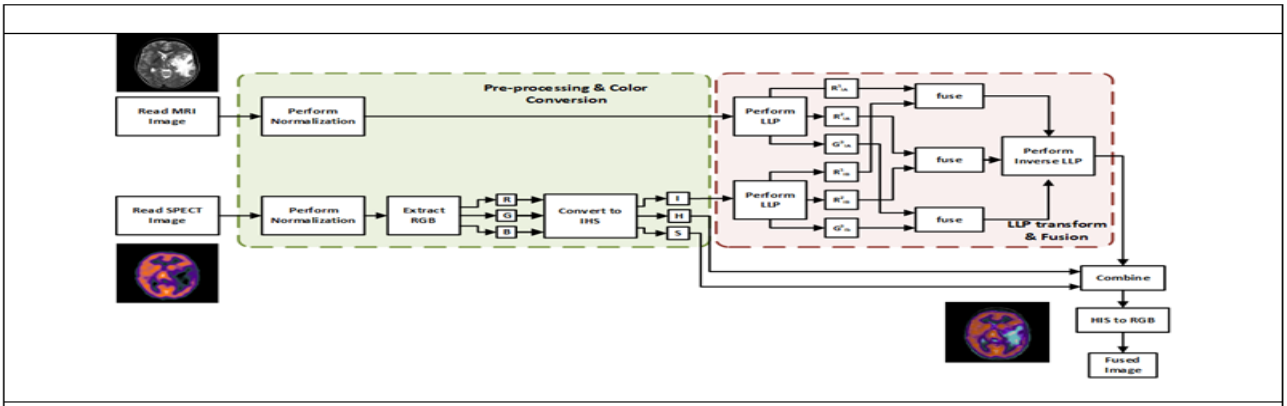

Fig.1.Block Diagram of Proposed Method

III. PROPOSED FUSION METHOD

The proposed fusion method is illustrated in Fig.1. In this method, the fusion is carried out in the Generalized Intensity-Hue-Saturation (GIHS) domain. The main reason behind image fusing in the GIHS domain is that this domain is good at preserving spatial information content and high-intensity information, substitutes the intensity channel information of the input pseudo-color functional image with the high-resolution anatomical image in grayscale [12], [13]. This method has three phases namely decomposition, fusion and reconstruction.

TABLE I: DEFINITIONS OF SYMBOLS

Symbol	Definition
A, B, F	Anatomical, functional, fused images, respectively.
IA, IB, IF	Luminance channel of anatomical, functional and fused images, respectively.
$R^i_{IA}, R^i_{IB}, R^i_{IF}$	Luminance channel of residual anatomical, functional, andfused images at the ith scale, respectively.

The inputs of Algorithm 1 are an anatomical image *A* and a functional image *B*. First, the luminance channel of the input pseudo-color functional image *B* is obtained by an averaging scheme:

$$IB = [R(IB) + G(IB) + B(IB)]/3 \quad (1)$$

and the illuminance channel of the input gray anatomical image *IA* equals image *A*. Second, the *L*-level LLP method is applied to decompose luminance channels *IA* and *IB* into approximate images G^L_{IA}, G^L_{IB}, and residual images at various $R^i_{IA}, R^i_{IB} (i = 1 \sim L-1)$

$$\sum_{i=1}^{L-1} R^i_{IA} + G^L_{IA} = I_A ; \sum_{i=1}^{L-1} R^i_{IB} + G^L_{IB} = I_B \quad (2)$$

Third, the fused approximate image *GL IF* and residual image *Ri IF* are estimated using the ACM and salience match measure methods, respectively.

$$G^L_{IF} = ACM(G^L_{IA}, G^L_{IB},); \; R^i_{IF} = \omega A R^i_{IA} + \omega B R^i_{IB} \quad (3)$$

where ωA and ωB denote the weight calculated by the salience match measure method

Algorithm 1

1: Obtain the illuminance images by the average filter using Eq. (3).
2: Apply the *L*-level LLP method to the input illuminance images using Eq. (4).
3: Compute *GL IF*,*RIi* fusing the ACM and salience match measure methods using Eq. (5).
4. Reconstruct the fused image of the luminance channel.
5. Obtain the fused image *F* using the GIHS method

A. *Salience Match Measure for Residual Images*

The human visual system has a higher sensitivity to changes in the local detail information. Therefore, the saliency match measure is applied to the fused residual images [14], [15]. Let Si RI (RI = RIA or RIB) be the salience measure for the residual images RIiA and RIiB and w be the local window with size 3 × 3. The salience match measure is defined as follows. First, the saliency feature is calculated by

$$S^i_{Ri}(x,y) = \sum_{\Delta n \in \omega} \left| R^i_I(x + \Delta n, +\Delta n) \right|^2 \quad (4)$$

where ωB = 1 - ωA.

Second, the parameter M reflects the resemblance between R^i_{IA} and R^i_{IB} used for quantifying the degree of similarity between the sources. The match measure M is defined as follows, where eps is a function in MATLAB.

$$M = \frac{2X \sum \Delta n \in \omega(R^i_{IA}(x + \Delta n, y + \Delta n))}{S^i_{R_{IA}}(x,y) + S^i_{R_{IA}}(x,y) + eps}$$

$$\begin{cases} \omega A = {}^1/_2 - {}^1/_2 \left(\frac{1-M}{1-\propto}\right), & if\ M \geq \beta \\ \omega A = \begin{cases} 1 & if\ S^i_{R_{IA}}, \\ 0, & Otherwise \end{cases} & Otherwise \end{cases} \quad (6)$$

After many experiments, the value of threshold β is set as 0.75 in Eq. (7). Finally, the fused residual image is obtained using the weights [16] via the salience match measure in Eq. (8)

$$R^i_{IF} = \omega A R^i_{IA} + \omega B R^i_{IB} \quad (7)$$

Algorithm 2

1: Histogram Fitting
(1) Compute the histogram of each input image.
(2) Use the high-order spline function to fit each histogram.
(3) Compute the differential of the fitted histograms, and then select the valley points from the first-order derivative *f'(v)*.
2: ACM generation
(1) Dispose of some obscure valley points to facilitate the division of the intervals.
(2) Apply the multistep backward cloud transformation algorithm to obtain the featured triple (*Ex*, *En*, *He*).
(3) Generate the cloud model using the featured triple (*Ex*, *En*, *He*).
3: Cloud reasoning rules
(1) Generate a set of membership values of images *GLIA* and *GLIB*.
(2) Apply the "multiplication algorithm" to obtain $\mu 1i \times \mu 2j = \mu x$.
(3) Select the maximal value denoted as μmax.
(4) Obtain the fused image at the *L*-th level.hod

B. *Local Laplacian Pyramid*

One effective and pellucid structure used to describe the image with multi-resolution is the image pyramid proposed by Burt and Adelson in 1983[16]. The steps used in this fusion method can be described as follows:

(1) The zero levels of the pyramid G_0 is equal to the original image. Then G_0 is low pass-filtered and subsampled by a factor of two to obtain the next pyramid level G_1 and get the other levels by analogy. The l level G_l is obtained by:

$$G_l = \sum_m \sum_n \omega(m,n) G_{l-1}(2i + m, 2j + n) \quad (8)$$
$$0 < l < N, 0 < i < \omega, 0 \leq j < R_l$$

Where N is the maximal level of the pyramid, C_l and R_l represent the column and row number of the l level pyramid respectively, ω (m, n) is called weighting function or "generating kernel," which is defined in this paper by.

$$\omega = \frac{1}{126} \begin{bmatrix} 1 & 4 & 64 & 1 \\ 4 & 16 & 2416 & 4 \\ 6 & 24 & 3624 & 6 \\ 4 & 16 & 2416 & 4 \\ 1 & 4 & 64 & 1 \end{bmatrix} \quad (9)$$

It is convenient to consider this process as a standard REDUCE operation, and simply write:

$$G_l = REDUCE[G_{l-1}] \quad (10)$$

This pyramid of lowpass images is called the "Gaussian pyramid." Bandpass images are required for many purposes. But in the "Gaussian pyramid," the images of the next levels differ in size and pixel. It is necessary to interpolate new sample values into higher levels.

(2) Interpolation is basically like the reverse of the REDUCE-process. We refer to it as an EXPAND operation. Let G_{l-1}^{*} be the image obtained by expanding G_l. Then $G_{l-1}^{*} = \text{EXPAND}[G_l]$, then

$$G_{l-1}^{*}(i,j) = 4\sum_{m}\sum_{n} G_l\left(\frac{2i+m}{2},\frac{2j+m}{2}\right) \quad (11)$$

$$G_l\left(\frac{2i+m}{2},\frac{2j+m}{2}\right) = \begin{cases} G_l\left(\frac{2i+m}{2},\frac{2j+m}{2}\right) & \frac{2i+m}{2},\frac{2j+m}{2} \text{ are integ} \\ 0 & others \end{cases}$$

So that G_{l-1}^{*} has the same size as G_{l-1}^{*}. The levels of the bandpass pyramid, L0, L1,…, LN could be obtained as follows.

$$L_l = G_l - EXPAND[G_{l-1}] \quad (12)$$

Now, a "Laplacian pyramid" is obtained. An important property of the Laplacian pyramid is that it is a complete image representation: the steps used to construct the pyramid may be reversed to recover the original image exactly [17].

(3) The process of recovering an original image is equivalent to the inverse pyramid transform. The top pyramid level, $L_N = G_N$, is first expanded and added to L_{N-1} to form G_{N-1} then expand and add G_{N-1} to L_{N-2} to recover G_{N-2}, and so on. Finally, G0 is recovered exactly.

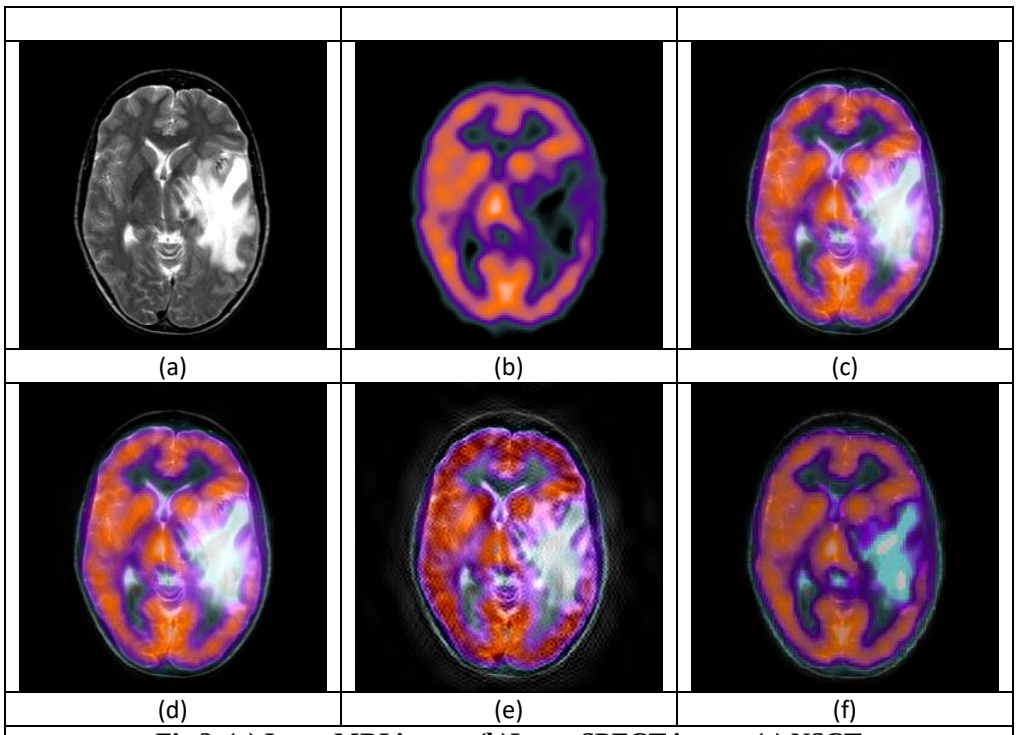

Fig.2. (a) Input MRI image, (b)Input SPECT image, (c) NSCT (d)contourlet (e) Curvelet (f) Proposed Method

TABLE II
PERFORMANCE OF THE PROPOSED IMAGE FUSION FOR SPECT

	E	STD	SF	NCC	Q_{abf}	MI	NIQE	VIF
NSCT	4.5121	43.1552	0.4094	0.4774	0.1009	1.1667	0.4336	5.0013
contourlet	5.0092	58.4183	0.4216	0.4744	0.3371	1.3089	1.3261	7.1497
curvelet	5.2738	62.0571	0.4320	0.4461	0.2533	1.1645	0.1009	4.1413
Proposed	**6.1593**	**64.4672**	**0.4447**	**0.8569**	**0.3966**	**1.5285**	**0.0005**	**7.6826**

IV. RESULT AND DISCUSSION

This section gives detailed information about the result and discussion. This paper is implemented using MATLAB 2018a. This work is carried out using a PC with an i5 processor and 4GB RAM. To assess the nature of the proposed technique, the testing dataset incorporates high-spatial-resolution MRI pictures that appeared in dark and low-spatial-resolution PET and SPECT pictures appeared in pseudo-color. The testing medical pictures are co-enrolled. Moreover, testing medical imaging information has a resolution size of 256 × 256. From the input source images in the figures, it very well may be noticed that the MRI picture catches the anatomical auxiliary data of the human cerebrum. Conversely, the PET and SPECT pictures mirror the bloodstream changes fit as a fiddle securing. The quality metric for picture fusion is a relevant quality evaluation device to assess the visual quality corruption of images experiencing different mutilations during the fusion system. The following parameters are measured to evaluate the performance of the proposed system.

They are Entropy (E), Spatial Frequency (SF), Normalized Cross Correlation (NCC), the metric gradient-based index ($Q^{AB/F}$), Mutual Information (MI), Natural Image Quality Evaluator (NIQE), Visual Information Fidelity (VIF) and standard deviation (STD).

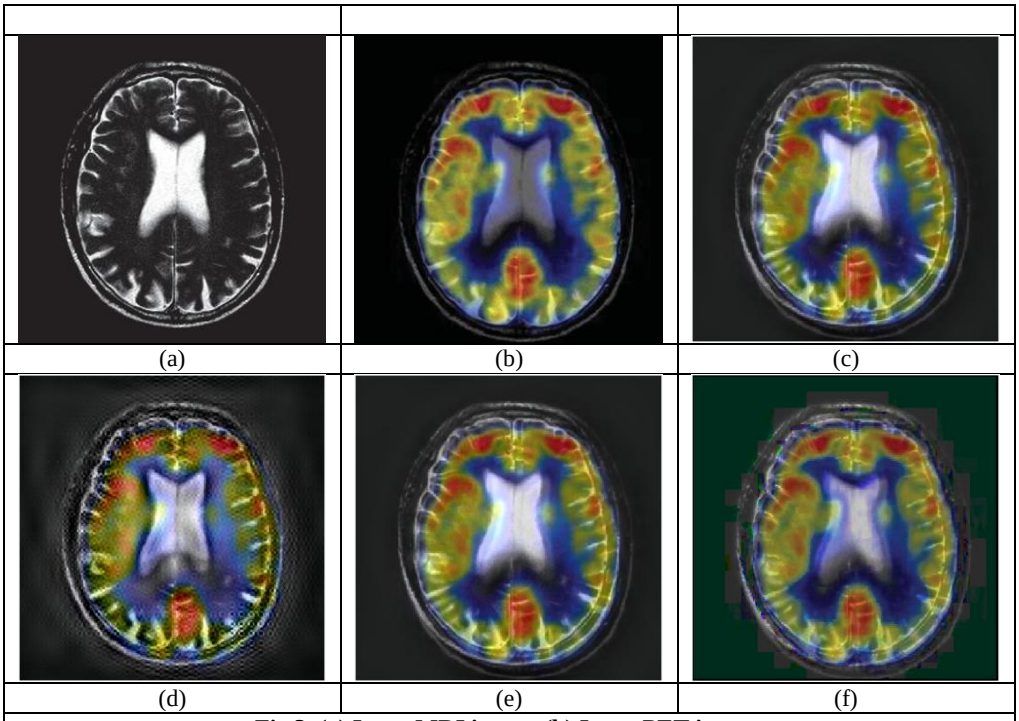

Fig.3. (a) Input MRI image, (b) Input PET image, (c) NSCT, (d) Contourlet (e) Curvelet (f) Proposed Method

TABLE III
PERFORMANCE OF THE PROPOSED IMAGE FUSION FOR PET

	E	STD	SF	NCC	$Q^{AB/F}$	MI	NIQE	VIF
NSCT	6.3470	47.0165	0.5654	0.5682	0.1676	3.1199	0.1053	4.7260
Contourlet	5.6706	42.2648	0.5653	0.5585	0.1959	2.1096	0.3806	4.0671
Curvelet	6.3470	47.0165	0.5654	0.5682	0.2676	3.1199	0.5467	4.7260
Proposed	**7.1272**	**47.5702**	**0.5898**	**1.0250**	**0.3144**	**3.1302**	**0.1001**	**9.3234**

Table II shows the performance of the proposed method for the SPECT image. Comparing to other methodologies the proposed method has favorable outputs, i.e., for example, the entropy of the proposed method shows a significant increase comparing to the entropy value of other fusion methods. Similarly, other parameters STD, SF, NCC also show favorable change for the proposed method.Fig.2 and 3 Illustrate the performance of the proposed system. The values are normalized to get the graph very clearly.

The proposed system is implemented and tested with two sets of images namely image1, image 2.Table II and Fig.2 gives detailed information about the comparison of performances of image data set 1 with existing image fusion methods.

Fig.3 and Table III show the performance of the proposed method for PET image which follows the same trend as in Table II.

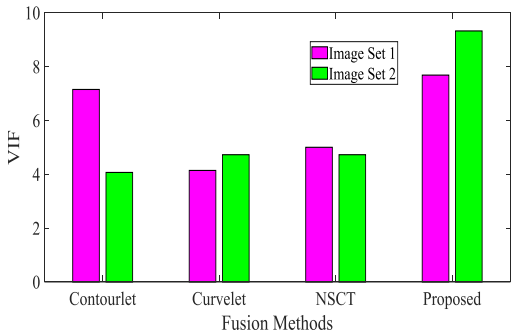

Fig.4. Evaluation of VIF using different fusion methods

Fig. 4. shows the VIF comparison of the proposed system with the existing systems like NSCT, Curvelet and contourlet [18]-[20]. Visual Information Fidelity (VIF) is a full reference picture quality evaluation record dependent on characteristic scene measurements and the thought of picture data removed by the human visual framework. The VIF file utilizes Natural scene factual (NSF) models related to a contortion (channel) model to evaluate the data shared between the test and the reference images.

Further, the VIF file depends on the speculation of this mutual data as a part of constancy that relates well with visual quality. Fig.4 shows the performance of the proposed method in terms of VIF. In this comparison, the proposed method performs well among all the methods. It produces the maximum VIF for image data set 1 and image data set 2.

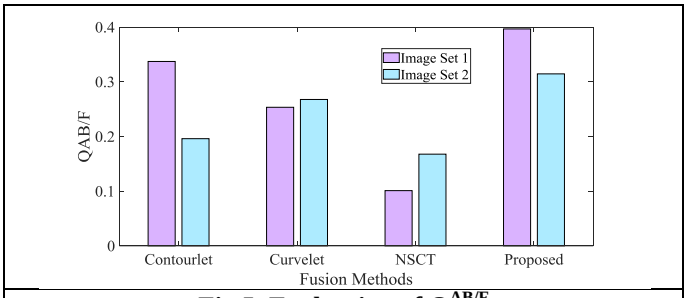

Fig.5. Evaluation of $Q^{AB/F}$

($Q^{AB/F}$) the metric is a pixel-wise measure of information preservation in the resultant image (F) from the source images (A, B). The value may lie between 0 & 1, where the value 0 implies the complete loss of information and 1 refers to the ideal fusion. The performance of various techniques based on $Q^{AB/F}$ is depicted in Fig.5.

V. CONCLUSION

In this paper, a high-quality image fusion using an LLP and ACM is proposed. To perform the fusion, PET/SPECT and MRI images are considered. To improve the sensitivity of output, the fusion process is performed in the intensity component of HIS transform. Local Laplacian Pyramid is employed to generate the coefficient from both PET/SPECT and MRI images. Fusion rule is performed based on the adaptive cloud model to get the highest accuracy. Finally, the inverse Local Laplacian pyramid is applied to convert the image into a special domain. The inverse color transformation is also employed to retrieve the original color format. Various performance evaluation metrics such as Entropy, Standard Deviation, Normalized Cross Correlation, $Q^{AB/F}$, Mutual Information, Natural Image Quality Evaluator (NIQE) and Visual Information fidelity (VIF) is considered. From the evaluation result, it is very clear that the information content as well as quality of the proposed method is improved a great level when compared to the conventional image fusion algorithms.

REFERENCES

1. Henri Matire , Isabelle Bloch, “Image Fusion”,*vistas in Astronomy*, Vol. 41, No. 3,1997, pp. 329-335.
2. James, Alex Pappachen, and Belur V. Dasarathy. "Medical image fusion: A survey of the state of the art." *Information Fusion* 19, Vol.19, 2014, pp. 4-19.
3. A. ArdeshirGoshtasby, StavriNikolov. “Image fusion: Advances in the state of the art.” *Information Fusion* , Vol.8, 2007, pp. 114–118.
4. Sotiras, Aristeidis, Christos Davatzikos, and Nikos Paragios. "Deformable medical image registration: A survey." *IEEE transactions on medical imaging*, Vol.32, No.7, 2013, pp. 1153-1190.
5. Jin, Xin, Gao Chen, Jingyu Hou, Qian Jiang, Dongming Zhou, and Shaowen Yao. "Multimodal sensor medical image fusion based on nonsubsampled shearlet transform and S-PCNNs in HSV space." *Signal Processing* 153, 2018, pp. 379-395.
6. Berger, Christian, Michael Voltersen, Robert Eckardt, Jonas Eberle, Thomas Heyer, NesrinSalepci, SörenHese et al. "Multi-modal and multi-temporal data fusion: Outcome of the 2012 GRSS data fusion contest." *IEEE Journal of Selected Topics in Applied Earth Observations and Remote Sensing*, Vol.6, No. 3, 2013, pp. 1324-1340.
7. Benedetti, Paola, Dino Ienco, Raffaele Gaetano, Kenji Ose, Ruggero G. Pensa, and Stéphane Dupuy. "M^3 Fusion: A Deep Learning Architecture for Multiscale Multimodal Multitemporal Satellite Data Fusion." *IEEE Journal of Selected Topics in Applied Earth Observations and Remote Sensing*, Vol.11, No. 12, 2018, pp. 4939-4949.
8. Wang, Jing, Xiongfei Li, Yan Zhang, and Xiaoli Zhang. "Adaptive decomposition method for multi-modal medical image fusion." *IET Image Processing*, Vol.12, No.8, 2018, pp. 1403-1412.
9. Bhateja, Vikrant, Himanshi Patel, Abhinav Krishn, Akanksha Sahu, and Aimé Lay-Ekuakille. "Multimodal medical image sensor fusion framework using cascade of wavelet and contourlet transform domains." *IEEE Sensors Journal*, Vol.15, No.12, 2015, pp. 6783-6790.
10. Liu, Xingbin, Wenbo Mei, and Huiqian Du. "Multimodality medical image fusion algorithm based on gradient minimization smoothing filter and pulse coupled neural network." *Biomedical Signal Processing and Control*, Vol.30, 2016, pp. 140-148.
11. Liu, Zhaodong, Hongpeng Yin, Yi Chai, and Simon X. Yang. "A novel approach for multimodal medical image fusion." *Expert systems with applications*, Vol.41, No. 16, 2014, pp. 7425-7435.
12. Li, Weisheng, Jiao Du, Zhengmin Zhao, and Jinyi Long. "Fusion of medical sensors using adaptive cloud model in local laplacian pyramid domain." *IEEE Transactions on Biomedical Engineering*, Vol. 66, No. 4, 2018, pp. 1172-1183.
13. T. Li and Y. Wang, “Biological image fusion using a nsct based variableweight method,” *Information Fusion*, Vol. 12, No. 2, 2011, pp. 85–92.
14. S. Daneshvar and H. Ghassemian, “Mri and pet image fusion by combining ihs and retina-inspired models,” *Information Fusion*, Vol. 11, No. 2, 2010, pp. 114–123.
15. G. Wang, C. Xu, and D. Li, “Generic normal cloud model,” *Information Sciences*, Vol. 280, 2014, pp. 1–15.
16. N. K. Kothadiya, U. K. Jaliya, and V. M. Agrawal, “Image fusion based on consistency checking and salience match measure,” International Journal of Engineering Trends & Technology, Vol. 4, 2013, pp. 1005-1008.
17. Shao, Chunshui, and Yiding Wang. "The face images fusion based on laplacian pyramid and lbp operator." *9th International Conference on Signal Processing*, 2008, pp. 1165-1169.
18. Y. Yang, Y. Que, S. Huang *et al.*, “Multimodal sensor medical image fusion based on type-2 fuzzy logic in nsct domain,” *IEEE Sensors Journal*, Vol. 16, No. 10, 2016, pp. 3735–3745.
19. Chen, Mu-Sheng, and Shun-Da Lin. "Image fusion based on curvelet transform and fuzzy logic" , *5th International Congress on Image and Signal Processing*, 2012, pp. 1063-1067.
20. L. Yang, B. L. Guo, and W. Ni, “*Multimodality medical image fusion based on multiscale geometric analysis of contourlet transform”* , Neurocomputing, Vol.72, 2008, pp. 203-211.

AUTHORS PROFILE

J.REENA BENJAMIN received her B.E degree in Electronics and Communication Engineering from Manonmanium Sundaranar University in 2001 and Master of Engineering in Communication Systems from Anna University, Chennai in 2006.Currently, she is working as an Assistant Professor at Narayanaguru College of Engineering, Tamilnadu and pursuing Ph.D. in part-time under Anna University, Chennai. She is a member of the Institute for Engineering Research and Publication (IFERP) and Institute of Research Engineers and Doctors (IRED). She has published papers in both international and national journals. She has presented papers at national and international conferences. Her current research interests are Medical Imaging, Signal Processing and Pattern Recognition.

T. JAYASREE has received her BE degree in Electronics and Communication Engineering in 1997 from Bharathidasan University, Trichy, TamilNadu and M.E degree in Applied Electronics in 1999 from Bharathiyar University, Coimbatore, TamilNadu. She received a PhD in Information and Communication from Anna University, Chennai. From 1999 to 2005, she worked as a lecturer in Noorul Islam College of Engineering, Nagercoil, TamilNadu. From 2006 to 2013, she worked as a lecturer in Govt. Polytechnic College, Tuticorin, TamilNadu. Presently, she is working as an Assistant Professor in the department of ECE at Government College of Engineering, Tirunelveli, TamilNadu. She has published several papers in international and national journals. Her research interests are Applications of Computational Intelligent Techniques, Power Quality Monitoring and Signal Processing. She is a life member of ISTE.

S.ANJANA VIJAYAN received her B.E degree in Electronics and Communication in 2017 from Anna University, Chennai. Currently, she is doing Master of Engineering in Applied Electronics at Narayanaguru College of Engineering, Kanyakumari District, Tamilnadu. Her current areas of interest are Signal Processing and image processing.