International Journal of Recent Technology and Engineering (IJRTE)
ISSN: 2277-3878 (Online), Volume-8 Issue-4, November 2019

# Design of Automatic Phototherapy System for Neonatal Hyperbilirubinemia

**Novi Azman, Fadelta Yasman, Endang Retno Nugroho, Ernawati Sinaga**

***Abstract:*** ***Hyperbilirubinemia is a disease that is often experienced by infants in the first life span. The natural treatment is to give treatment to get sunlight. But, the sunlight naturally is not always available for a full day, so a safe treatment is to provide phototherapy treatment using light with a specific wavelength. However, the practice is generally done manually and needs to be monitored by medical personnel for the intensity of the light depending on the amount of total serum bilirubin levels in the infants' body. With the device made in this study, the placement of the distance between lamp and baby can do automatically, it provides efficiency in the procedures for treatment and also for medical personnel.***

***Keywords*****:** ***Hyperbilirubinemia, Microcontroller, Neonatal, Phototherapy.***

## I. INTRODUCTION

The problem that often occurs in newborns or neonatal is experiencing excessive levels of bilirubin in the body, known as Neonatal hyperbilirubinemia. Hyperbilirubinemia is an unconjugated pathogen including jaundice that appears in the body of a newborn in the first 24 hours of life, or the level of serum bilirubin levels exceeds 0.2 mg/dl/hour [1]. Excess levels of bilirubin are one of the main problems in the neonatal period in the world, especially in Asia and developing countries [2]-[5]. A study conducted by Maisles found the prevalence of hyperbilirubinemia in the first week of life, around 8% to 20% [6]. Another study conducted at a hospital in Indonesia by Yahya and colleagues found a prevalence of neonatal hyperbilirubinemia of around 4.08%, which makes cases of excess bilirubin levels in newborns a typical case that occurs and is one of the problems in newborns in hospitals [7]. Increased levels of bilirubin in severe stages cause acute bilirubin encephalopathy with deafness and negligence of permanent nerve development caused by toxicity of bilirubin in the brain [8]-[9], even studies conducted by Indiyani and colleagues get a result that around 24% death related to hyperbilirubinemia cases [10] (1 1410122).

Phototherapy itself is one of the first treatments for hyperbilirubinemia in 1958 after the use of artificial light sources at Rochford Hospital in Essex, England. Based on studies they have done to babies who have hyperbilirubinemia by bringing the baby out regularly to get sunlight and fresh air. Based on this treatment, it shows that jaundice in the baby faded from the area of the skin exposed to sunlight [11]. Based on these studies, the sun is the main potential in the treatment of hyperbilirubinemia, while using individual light waves can also be used to conduct treatment.

So in the last few decades, treatment for hyperbilirubinemia in newborns is by implementing phototherapy which, according to the American Academy of Pediatrics (AAP), treatment for hyperbilirubinemia must begin when total serum bilirubin levels rise above the given limit, also required monitoring of serum bilirubin levels total during treatment to ensure the effectiveness of the treatment carried out. Phototherapy surface area and intensity are variables that need to consider during treatment [12] [4 v001t1]. Instead of doing a treatment using exchange transfusion, phototherapy treatment is the treatment of choice because of the continuity and safety of the procedures performed.

As mentioned earlier that there are still many practices in treatment that are carried out by monitoring the health workers to ensure the maximum effectiveness of the treatment carried out, in this study the design of devices that can regulate the placement of lights on phototherapy equipment at appropriate distances automatically. The design of the device made in this study is used to control temperature exposure. Also, controlling the placement of lamps in infants for the treatment of hyperbilirubinemia automatically. This proposed solution is expected to increase efficiency and effectiveness in the procedures performed and also the work of the medical staff involved.

## II. MATERIAL AND PROPSED METHOD

### A. Material

In this research, it requires several electronic devices to make a proposed device to make a treatment device for hyperbilirubinemia automatically. Parts of the equipment used in this study can be found freely on the market. The big picture is that the device made in this study consists of two parts, the primary device and the monitoring device.

Manuscript published on November 30, 2019.
* Correspondence Author
**Novi Azman**, Electrical Engineering, Universitas Nasional, South Jakarta, Indonesia. Email: novi.azman@civitas.unas.ac.id
**Fadelta Yasman**, Electrical Engineering, Universitas Nasional, South Jakarta, Indonesia.
**Endang Retno Nugroho**, Electrical Engineering, Universitas Nasional, South Jakarta, Indonesia. Email: retno.nugroho@civitas.unas.ac.id
**Ernawati Sinaga***, Biology, Universitas Nasional, South Jakarta, Indonesia. Email: ernawatisinagaj@unas.ac.id

This device is designed to have the following capabilities:

Main Devices

1. It has a light sensor that measures the intensity of the light and a temperature sensor that measures the temperature of the baby's temperature.
2. Display the intensity of light, air temperature, and actual time on the LCD 20x4.
3. Adjust the height of the light source (position Z), which affect the intensity of the blue light that hits the baby object.
4. Sending measured data to the computer wirelessly (without cable).

Monitor Devices:

1. Have a wireless data receiver from the primary device.
2. Software on the computer that displays certain conditions and data from the primary device

This device consists of 2 parts, namely the primary device and the monitoring device. The main device is a device that has the primary function consisting of ATmega 2560 microcontroller, 20 x 4 LCD Display, 4 x 4 keypad, buzzer, DS18B20 temperature sensor, RTC DS3231 IC, stepper motor and driver, mechanical parts, wireless transmitter module in the form of NRF24L01 wireless board , and Blue Light lights. The monitor device consists of a wireless receiver module in the form of a wireless USB board and software on the computer. The monitor is an additional feature that functions to monitor and monitor the actual condition of the system that is happening in real-time. The primary devices and monitoring devices can be connected wirelessly or using cables depending on the conditions and desires of the design, but in this system, the design is use communication using wireless. The entire device can show in a block diagram of how the device system works made in this study which shows in Fig. 1.

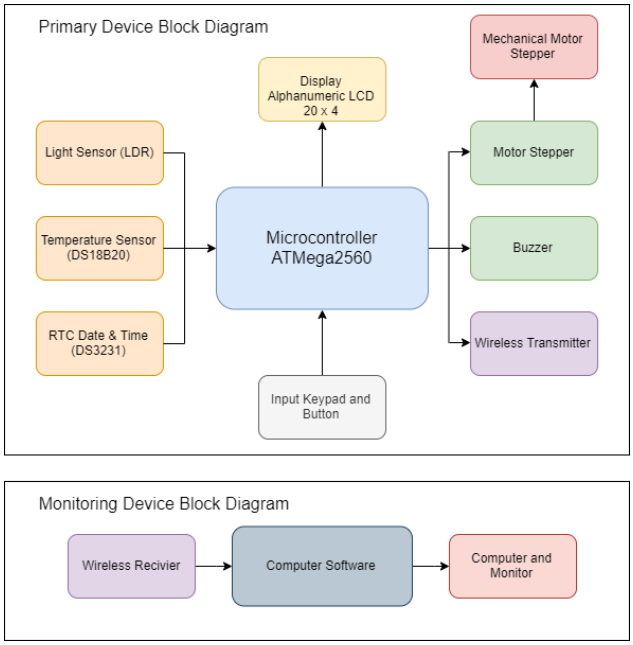


**Fig. 1. Automation phototherapy device system block diagram**

Each part of the system block diagram above can explain as follows:

Main Device

1. The Main Device is in a small black box consisting of ATmega2560 microcontroller, 20x4 LCD display, 4x4 Keypad Matrix, Buzzer, Wireless Module, Light sensor, temperature sensor, stepper motor driver, and stepper motor.
2. The ATmega2560 microcontroller functions as the central controller in the system that reads sensors, input-output, regulates the system and sends data.
3. 20x4 character LCD display functions to display certain information, light intensity value, time, temperature sensor, and other information.
4. Keypad input as input for functions, configurations, and other settings by the user or user operator of the device.
5. Buzzer as a sound indicator as information to the user.
6. Light sensor to measure the intensity of light reaching the baby's object.
7. Temperature sensor to measure the baby's body temperature.
8. RTC module as a source of calendar and time information.
9. Stepper Motor and Stepper Driver as a mechanical drive light source.
10. Wireless transmitter functions to send data to the Monitoring Device.

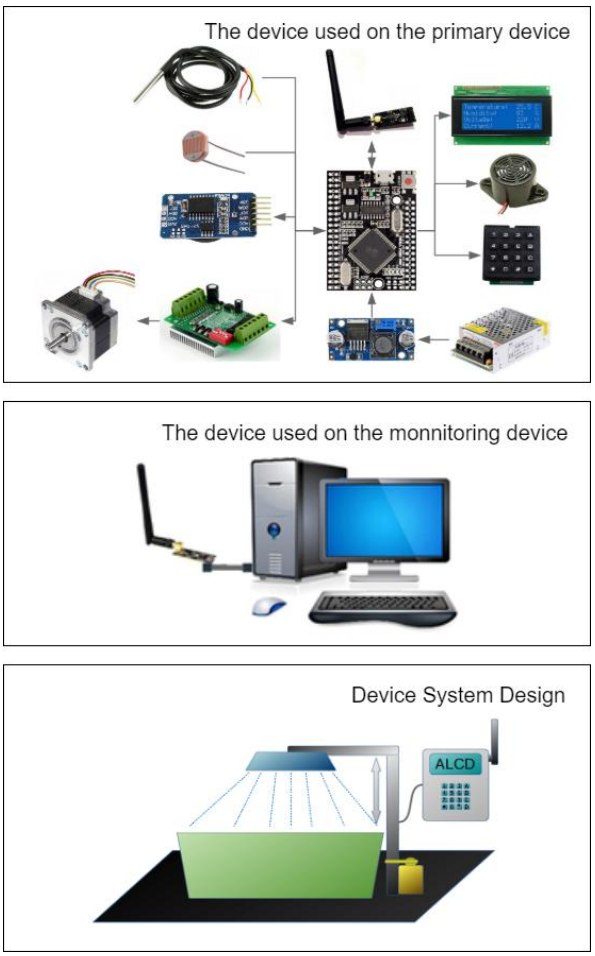


**Fig. 2.Automation phototherapy proposed design**

Monitoring Device

1. Wireless receiver functions to receive data sent by the wireless transmitter from the Main Device.
2. Computer software is an additional optional software designed to display data in real-time according to the requirements of this system.
3. Computers and monitors are additional optional devices to facilitate the display of computer software.

The proposed design which shows in Fig. 2.

### B. Proposed Procedure

The block diagram shows how the whole system works on Fig. 1. In this system, the first system is in standby and is waiting for user input. In standby mode, the system only displays the date and time as information; the Blue Light LED is in the OFF position and places the LED in the highest position (TOP). When the user presses the button on the keypad to start the process, then the user asks to enter several parameters including the value of the patient's (bilirubin) bilirubin level and the duration of exposure in minutes.

When input parameters is entering, and the Start button is press, the stepper motor moves the Blue Light LED in the position corresponding to these parameters. After reaching the position, the Blue Light LED is then ON, and the countdown timer activated. After the specified time has expired, the Blue Light LED will OFF with a continuous Buzzer sound, and the stepper motor moves the Blue Light LED back to the top (TOP) position.

## III. RESULT AND DISCUSSION

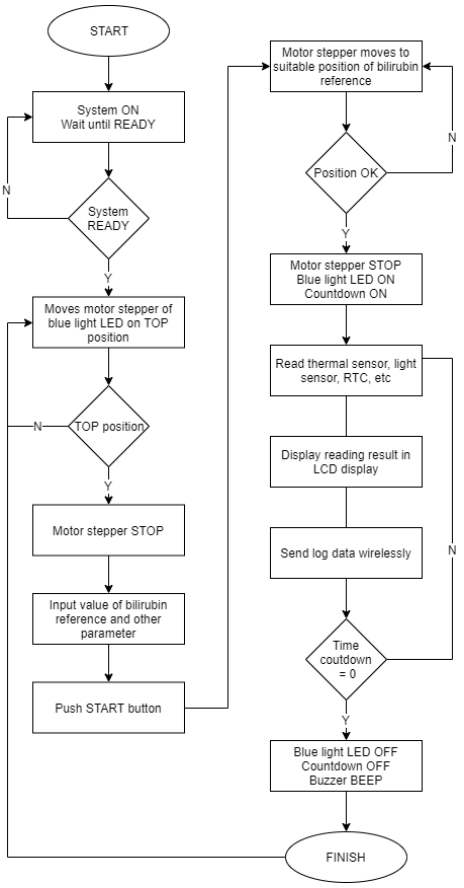


**Fig. 3.Flow process of automatic phototherapy device system**

The flow that occurs in the device used in this study begins on the microcontroller. This design aims to regulate the work of the system such as regulating readings including temperature sensors, light intensity sensors, upper limit switch sensors, lower limit switch sensors, regulating the movement of stepper motors, and timing (RTC). It also displays the display on the LCD display and obtains input from the 4x4 matrix keypad. In general, the process that occurs can show in Fig. 3.

Before the microcontroller performs a series of processes, the first thing to do is initialize. The initialization of this program is to determine some input ports such as a keypad and limit switches, outputs for Buzzer, LED indicators, and stepper motors, interfaces for LCD alpha.

After the microcontroller initialization is complete, the Stepper Motor moves the Blue Light LED to the TOP (top) position as the default position or Ready state before performing the phototherapy process. And when it reaches the top position, the stepper motor stops moving and waits for the next process.

When the system is ready, the display on the LCD is to display the date and time and information to the user to press the 'B' button if they want to start the Phototherapy process. The phototherapy process begins by entering the value of the bilirubin parameter. The bilirubin values show in the following Table-I.

The assignment of this value by pressing the button on the keypad. The 4x4 matrix is on the alphanumeric LCD screen, then if it START the process by pressing the D button on the keypad. After the process begins, the stepper motor move all of which are from the top position (TOP) go down several steps until a distance of 35-50 cm reach from the bottom of the system device. If the position according to the reference is to reach, the stepper motor will stop, and all Blue Light LED lights ON.

**Table- I: Bilirubin against distance and duration of blue light treatment**

| No | Bilirubin (mg/dl) | Distance (mm) | Duration (minute(s)) |
|---|---|---|---|
| 1 | 10 | --- | --- |
| 2 | 11 | --- | --- |
| 3 | 12 | 500 | 1 ~ 15 |
| 4 | 13 | 475 | 1 ~ 15 |
| 5 | 14 | 450 | 1 ~ 15 |
| 6 | 15 | 425 | 1 ~ 15 |
| 7 | 16 | 400 | 1 ~ 15 |
| 8 | 17 | 375 | 1 ~ 15 |
| 9 | 18 | 350 | 1 ~ 15 |
| 10 | 19 | --- | --- |
| 11 | 20 | --- | --- |

When the LED is ON the Phototherapy process has begun, and the countdown timer (Countdown) begins. Countdown Timer uses units of seconds which is the result of the definition of input from the user that is if 1-minute means 60 x 1 = 60 seconds, 2 minutes means 60 x 2 = 120 seconds, 3 minutes means 60 x 3 = 180 seconds, and 4 minutes means 60 x 4 = 240 seconds, and so on.

Temperature, light intensity, and RTC sensor readings are carried out simultaneously at this time, and the results of the readings are sent wirelessly to applications on the computer via a wireless module.

When the countdown process has finished, the Blue Light LED system will OFF, the stepper motor moves back to the top (TOP) position, and the buzzer is sounded a few moments to call the nurse or as another indication. After all, processes are complete, the system return to the default or Ready State.

When the system is turned on, the first thing to do is initialize the system followed by the "Main Loop Wait Process" mode. This mode is awaiting mode command to enter the parameters needed to run the system. To start, the user must press the B button on the keypad and start entering parameters.

The first parameter that must enter is the amount of bilirubin in mg/dl units, which is a parameter that shows the level of jaundice in infants. The parameter of bilirubin determines the distance between the source of blue light and the object to be illuminated (baby). The range of parameter values that can enter is 12 mg/dl to 18 mg/dl, outside of that value will defined as incorrect input or 0 (zero) which require the user to input the correct value.

The second parameter to be entered is the length of exposure that gives to the object. When providing time input, the user enters in units of minutes, i.e. the parameter ranges from 1 minute to 15 minutes. However, the system converts into seconds during the countdown.

After entering the two parameters, the stepper motor moves the position of the light to the reference distance by the value of bilirubin, and then the lamp is ON until the countdown reaches a value of 0 seconds. When it reaches 0 seconds, the lamp turns OFF, and the stepper motor moves up towards the top position (TOP).

Advantage of the device, from the results of testing the system and process steps. That is design it can compare to a phototherapy system that design with the actual phototherapy applied to the hospital. Although there are several modes and types of phototherapy devices available, what use as a comparison is standard phototherapy in clinics. The advantages and features of the phototherapy process include:

1. The process of using a microcontroller that can be made and developed by anyone engaged in digital electronics.
2. The design and process are still flexible and can redevelop according to the designer's wishes or needs.
3. Using a baby's body temperature sensor to monitor the state of the baby's body temperature.
4. Using the light intensity sensor to measure the intensity of the light to match the standards that it should.
5. There is an RTC timer that informs the date, calendar, hours, minutes, and seconds as additional information during the process and the appropriate Countdown to turn on or turn off Blue light during the phototherapy process.
6. Using a stepper motor to adjust the distance of the Blue Light source to the baby better and according to the standard.
7. The process runs automatically after getting input parameters from the doctor or nurse on duty.
8. In this tool, there is also a sensor to detect blue lights, if the lamp life to reach, the buzzer is sound, and the lamp turns off by itself.

## IV. CONCLUSION

Based on the results obtained in this study, we can conclude that, with the tools made in this study, it can provide solutions to the medical world to make it easier for doctors and nurses to adjust the distance of the phototherapy lamp to the illuminated object (baby) at the time in accordance with the baby's condition. This tool also has a temperature sensor to detect the baby's body temperature without having to use other tools. Because the baby's body temperature must be monitored continuously in real-time to avoid the risk of dehydration in infants. In this tool, there is also a sensor to detect blue lights if the lamp life is to reach the buzzer sounds, and the lamp turns off by itself. Then the blue light lamp must be replaced with a new lamp because even though the lamp is still on if its lifetime is to reach, the function of the ray therapy on the blue light is no longer optimal.

## REFERENCES


1. American Academy of Pediatrics Subcommittee on Hyperbilirubinemia. Management of hyperbilirubinemia in the newborn infant 35 or more weeks of gestation. Pediatrics 2004;114(1):297-316; erratum in: Pediatrics 2004:114(4):1138.
2. Kliegman RM, Stanton BMD, Geme JS, Schor NF, Behrman RE. Nelson textbook of pediatrics: expert consult. 19th ed. Philadelphia: Elsevier Health Sciences; 2011. p. 603–8.
3. National Institute for Health and Care Excellence. Neonatal jaundice: NICE clinical guideline 98. Manchester: Nurain Yahya, Tetty Yuniati, Leonardo Lubis: Characteristics of Neonatal Hyperbilirubinemia at West Java's Top Referral Hospital, Indonesia National Institute for Health and Clinical Excellence.
4. Setia S, Villaveces A, Dhillon P, Mueller BA. Neonatal jaundice in Asian, white, and mixed-race infants. Arch Pediatr Adolesc Med. 2002;156(3):276–9.
5. Sgro M, Campbell D, Shah V. Incidence and causes of severe neonatal hyperbilirubinemia in Canada. CMAJ. 2006;175(6):587–90.
6. Maisels MJ, Gifford K, Antle CE, Leib GR. 1988. Jaundice in the healthy newborn infant: A new approach to an old problem. PEDIATRICS, 4 (81): 505-511.
7. Nurain Y, Tetty Y, Leonardo L. Characteristics of Neonatal Hyperbilirubinemia at West Java's Top Referral Hospital, Indonesia. Althea Medical Journal, Vol 4 No 2, 2017.
8. Maisels MJ. Neonatal jaundice. Pediatr Rev. 2006;27(12):443–54.
9. Du L, Ma X. International perspectives: hyperbilirubinemia and kernicterus in neonates in China. Neoreviews. 2012;13(3):e141–4.
10. Indriyani S, Retayasa WI, Surjono A, Suryantoro P. 2009. Percentage birth weight loss and hyperbilirubinemia during the first week of life in term newborns. Paediatrica Indonesiana, 3 (49): 149-154.
11. Stokowski, Laura A. Fundamentals of phototherapy for neonatal jaundice. Advances in Neonatal Care 2011;11(5 Suppl):S10–21.
12. Pediatrics, A. A. of, 1994, "Practice Parameter: Management of Hyperbilirubinemia in the Healthy Term Newborn. American Academy of Pediatrics. Provisional Committee for Quality Improvement and Subcommittee on Hyperbilirubinemia.," Pediatrics, 94(4 Pt 1), pp. 558–65.