International Journal of Recent Technology and Engineering (IJRTE)
ISSN: 2277-3878 (Online), Volume-8 Issue-4, November 2019

Modelling & Position Control for Electro-Hydraulic System

Meera C S, Mukul Kumar Gupta

Abstract*: Electro-hydraulic systems (EHS) are widely used in industrial applications due to the high-power density and accuracy. However, EHS are highly nonlinear which makes its modelling and control aspects a complex process. In this paper, we present the modelling and position control for an electro-hydraulic system (EHS). The mathematical modelling is carried out considering the non-linearities like friction, discharge coefficient and load mass present in the system. A back-stepping control scheme is developed for maintaining the accuracy in the position control. The closed-loop stability of the proposed control system is analyzed with Lyapunov's theory. The performance of the control system under the effect of bounded external uncertainties is validated with simulation study. The study indicates that the proposed controller gives an effective motion control in presence of the system uncertainties.

***Keywords*: Backstepping control, electro-hydraulic system, modelling, position control**

I. INTRODUCTION

Electro-hydraulic systems are an integral part of earth-moving machineries like loaders and excavator backhoes that have become essential in the natural disaster management, rescue operations, agriculture, mining and construction [1]. The electro hydraulic systems consisting of hydraulic cylinders, servo valves and pumps. An autonomous operation with these machineries would require modelling and accurate motion control of the EHS.However, the EHS systems are highly non-linear and modelling them is a complex process [2-5]. The presence of friction, leakages, valve overlapping, and external load makes the development of functions that describe them a complicated task. In order to ensure accurate motion control in presence of the model uncertainties, development of robust non-linear controllers is crucial. Various studies have been performed on the development of nonlinear controllers for position control [6-7], parameter-identification [8-9] and estimation of states [10]. Moreover, studies showing the application of adaptive control and feedback linearization for the control of electro hydraulic systems are reported in [11-13]. Various studies relating to the development and implementation of disturbance-observer assisted non- linear tracking controllers showed good tracking performance by estimating and compensating the effect of disturbances [14-16]. Some of the previous studies also shows the application of backstepping based control techniques to compensate for unmodeled disturbances like unknown load mass, friction etc. Unknown load disturbance is compensated using a combination of backstepping control and a disturbance observer in [17]. The position control system was developed by Qing et.al with extended-state observer and backstepping controller. In this study, it was shown that even under the uncertain servo-valve dynamics, the error converged to steady state value [18].

The paper proposes the development of a backstepping controller for the motion control of an EHS. The stability analysis of the proposed motion control approach is verified with the method of Lyapunov direct analysis which parallels similar works presented by [19]. The paper organization is as follows: The system modelling is demonstrated in section 2. The development of the controller and its stability analysis is presented in section 3. In section 4, the simulation results with the proposed controller and its comparison to a conventional PI controller is discussed, followed by conclusion in section 5.

II. DYNAMIC MODELLING OF EHS.

The EHS is modelled as a fourth order system. A hydraulic actuator shown in figure 1 is symmetric. The servo-valve is modelled as a 1st order linear dynamic equation given by,

$$T_s\dot{X}_v + X_v = K_s u \tag{1}$$

where, Ks is the servo valve's gain constant and T_s is the time constant. $\dot{X}_v$ and X_v are the spool position and valve velocity respectively. u represents the control voltage.

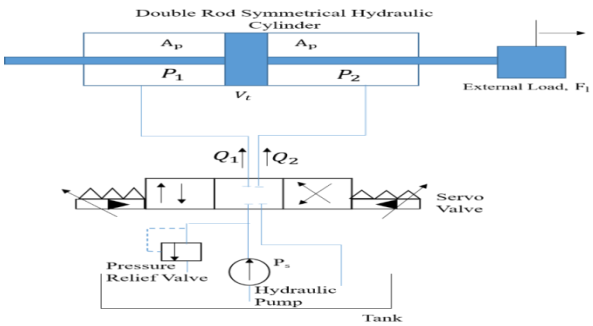

Fig.1. Hydraulic System Model Consisting Of A Symmetric Hydraulic Cylinder, Servo Valve, Pressure Relief Valve And A Hydraulic Pump

Manuscript published on November 30, 2019.
* Correspondence Author
Meera C S*, Department of Electrical and Electronics, University of Petroleum and Energy Studies (UPES), Dehradun (UK), India.
Mukul Kumar Gupta, Department of Electrical and Electronics, University of Petroleum and Energy Studies (UPES), Dehradun (UK), India.

Q_l is the load flow-rate in the servo valve is and is given by ,

$$Q_l = C_d w X_v \sqrt{\frac{1}{\rho}(P_s - sgn(X_v)P_l)} \quad (2)$$

where, C_d, w and ρ represents the discharge co-efficient, area-gradient of the servo-valve spool and hydraulic fluid density respectively. P_1 denotes the supply-pressure in the hydraulic pump and P_2 is the load-pressure of the hydraulic cylinder given by,

$$P_l = P_1 - P_2 \quad (3)$$

The law of continuity is applied to both chambers of the hydraulic cylinder and the load flow-rate can be given as,

$$\dot{Q}_l = A_p \dot{y} + C_{tl} P_l + \frac{V_t}{4\beta_e}\dot{P}_l \quad (4)$$

In equation 4, y and A_p represents the displacement and area of the cylinder respectively, V_t denotes the complete cylinder volume. The coefficient of leakage is $C_{tl}$and βe denotes the bulk-modulus of the system. The piston dynamics can be given with Newton's second law as,

$$m\ddot{y} = -ky - b\dot{y} + P_l A_p - F_l \quad (5)$$

Here, the mass of the piston is given by m, the spring constant by k, the external load acting on the cylinder by F_l. and the co-efficient of viscous damping by b. The state variables can be defined as,

$$[x_1, x_2, x_3, x_4]^T = [y, \dot{y}, P_l, X_v]^T \quad (6)$$

The state-space model of the electro- hydraulic system can be represented as in equation 7 as,

$$\dot{x}_1 = x_2 \quad (7)$$
$$\dot{x}_2 = \frac{1}{m}(-kx_1 - bx_2 + A_p x_3 - F_l)$$
$$\dot{x}_3 = \frac{4\beta_e A_p}{V_t}x_2 - \frac{4\beta_e C_{tl}}{V_t}x_3 + \frac{4\beta_e C_d w}{V_t\sqrt{\rho}}\sqrt{P_s - \tanh(kx_4)\,x_3}\,x_4$$
$$\dot{x}_4 = -\frac{1}{T_S}x_4 + \frac{K_S}{T_S}u$$

For the derivation of the proposed backstepping control, the function sgn(.) is smoothed and replaced by tanh(.) function [20].

$$tanh(kX_v) = \frac{e^{kX_v} - e^{-kX_v}}{e^{kX_v} + e^{kX_v}}, \text{ k>>0} \quad (8)$$

III. DESIGN OF BACKSTEPPING CONTROL

For the position tracking of the EHS, the tracking error between the desired output and the actual output e, can be defined as,

$$e_i = x_i - x_{id} \quad (9)$$

where x_{id} is the desired position and x_i is the actual position. The Lyapunov function is chosen as,

$$V_1 = \frac{1}{2}{e_1}^2 \quad (10)$$

The derivative of V_1 w.r.t to time is given by,
$\dot{V}_1 = e_1.\dot{e}_1 = e_1(x_{2d} - \dot{x}_{id})$. By choosing x_{2d}as
$x_{2d} = \dot{x}_{id} - k_1 e_1$,

$$\dot{V}_1 = -k_1 {e_1}^2 \le 0 \quad (11)$$

For the next step, the Lyapunov function V_2 is chosen as,

$$V_2 = V_1 + \frac{1}{2}{e_2}^2 . \quad (12)$$
$$\dot{V}_2 = \dot{V}_1 + e_2.\dot{e}_2 = \dot{V}_1 + (\dot{x}_2 - \dot{x}_{2d})e_2$$
$$= \dot{V}_1 + (\frac{kx_1}{m} - \frac{bx_2}{m} + \frac{A_p x_{3d}}{m} \frac{F_l}{m} - \dot{x}_{2d})e_2 \quad (13)$$

By considering x_{3d} as,

$$x_{3d} = (\frac{kx_1}{m} - \frac{bx_2}{m} + \frac{F_l}{m} + \dot{x}_{2d} - k_2 e_2)\frac{m}{A_p} \quad (14)$$

And substituting x_{3d} in equation 13 $\dot{V}_2$ is simplified to,

$$\dot{V}_2 = -k_1 {e_1}^2 - k_2 {e_2}^2 \le 0 \quad (15)$$

By considering x_{4d} as,

$$x_{4d} = \frac{1}{g_3\sqrt{P_s - \tanh(kx_4)x_3}}(-g_1 x_2 - g_2 x_3 + \dot{x}_{3d} - k_3 e_3) \quad (16)$$

where, $g_1 = \frac{4\beta_e A_p}{V_t}$, $g_2 = \frac{4\beta_e C_{tl}}{V_t}$, $g_3 = \frac{4\beta_e C_d w}{V_t\sqrt{\rho}}$, the Lyapunov function V_3 can be written as,

$$V_3 = V_2 + \frac{1}{2}{e_3}^2, \quad (17)$$
$$\dot{V}_3 = \dot{V}_2 + e_3.\dot{e}_3$$

$$= \dot{V}_2 + e_3(x_{4d} - \dot{x}_{3d}) \quad (18)$$

Substituting $\dot{V}_2$ (from equation 15) in equation 18,

$$\dot{V}_3 = -k_1 {e_1}^2 - k_2 {e_2}^2 - k_3 {e_3}^2 \le 0 \quad (19)$$

The Lyapunov function V_4 is defined as,

$$V_4 = V_3 + \frac{1}{2}{e_4}^2. \quad (20)$$
$$\dot{V}_4 = \dot{V}_3 + e_4.\dot{e}_4$$
$$= \dot{V}_3 + e_4.(\dot{x}_4 - \dot{x}_{4d}) \quad (21)$$

The controller u is chosen as,

$$u = \frac{T_s}{K_s}(\frac{x_4}{T_s} + \dot{x}_{4d} - k_4 e_4) \quad (22)$$
$$\dot{V}_4 = -k_1 {e_1}^2 - k_2 {e_2}^2 - k_3 {e_3}^2 - k_4 {e_4}^2 \le 0 \quad (23)$$

As $\dot{V}_4$ is negative the stability is proved with Lyapunov's direct method. The stability analysis in the above equations is proved such that the external disturbances are considered to be bounded.

IV. RESULTS AND DISCUSSION

Fig.2. Simulink model of the EHS used in the study.

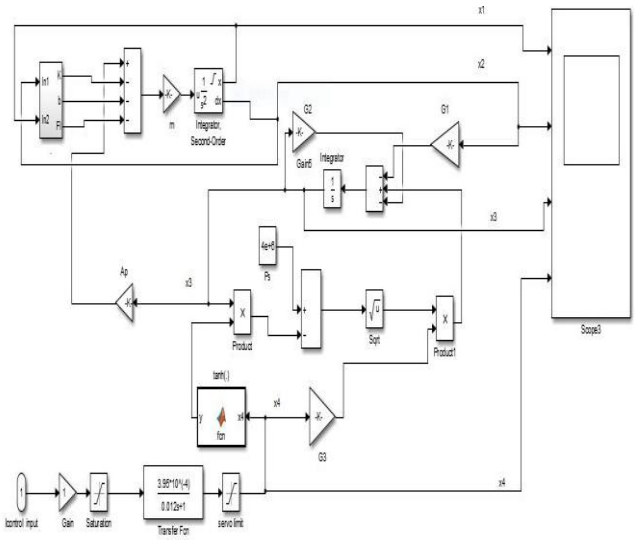

Fig.3.b Performance of the PI controller in tracking the input signal 0.5 Hz.

To verify the performance efficiency of the proposed control system a simulation study carried out in MATLAB/SIMULINK by varying input signal frequency.The input signal was taken as sine wave at 0.5 Hz and 0.1 Hz and the output was observed. The system modelling presented is similar to other studies as [21]. The Simulink model developed for EHS is shown in figure 2. In addition to this, the proposed controller performance was compared to a conventional PI controller for both the frequencies of input sine wave.

The PI controller was given as,

$$u = K_p e + K_i \int e \; dt \; . \tag{24}$$

Figure 3a and 3b shows the tracking performance of the proposed controller and the PI controller for input frequency at 0.5Hz respectively. The gain values Kp and Ki for PI controller are chosen as 100 and 15 respectively.

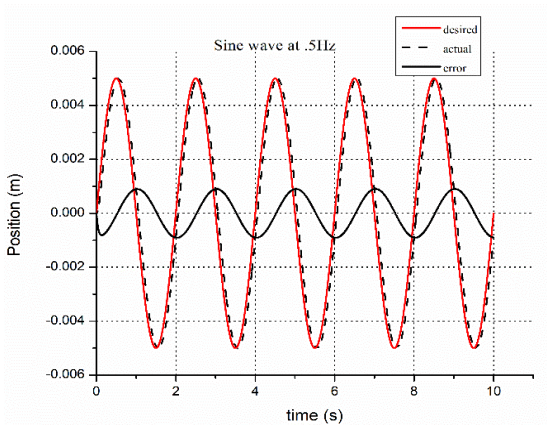

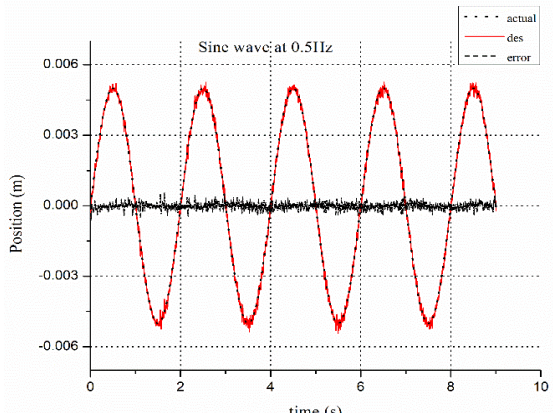

Fig.3.a Performance of the proposed controller in tracking the input signal 0.5 Hz.The root mean square error (RMSE) for the proposed controller is obtained as 0.00012, whereas the RMSE of the PI controller was 0.00121 for the input signal tracking. The error signal is shown in black line for both the controllers. The system non-linearities like friction is considered for motion control study. From the result it can be seen that the error for proposed controller is almost zero, whereas error with PI controller is higher. The proposed controller shows a superior performance than the PI controller.

Figure 4a and 4b shows the performance of the proposed controller and the PI controller in tracking a reference signal at 1 Hz.

The RMSE for the proposed backstepping controller is 0.0024 and the conventional PI controller is found to be 0.2313.

From the results it can be seen that the error is more for the PI controller at 1 Hz. The steady-state error does not converge and shows an oscillatory nature for the PI controller. The steady-state error of the developed controller converges to zero, which asserts the superiority of the proposed motion control system.

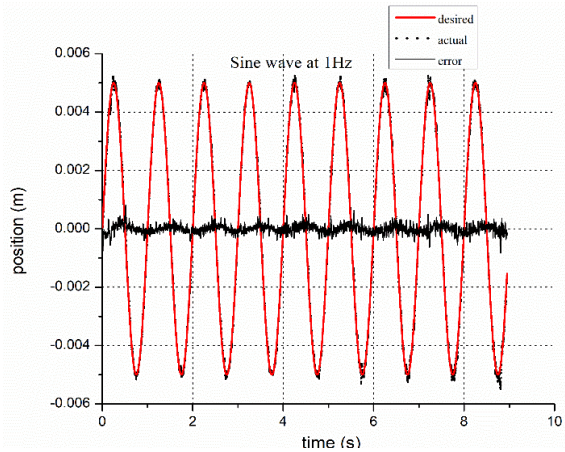

Fig. 4.a. Performance of the proposed controller in tracking an input reference signal of 1 Hz

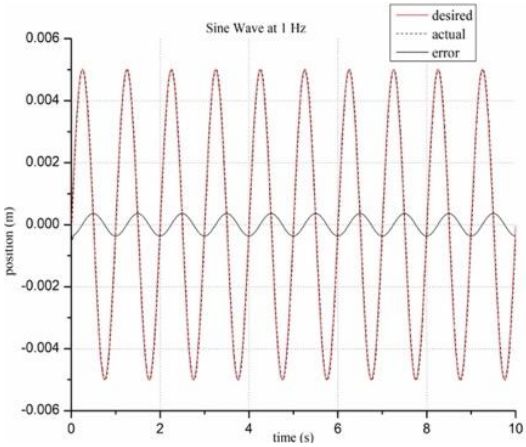

Fig.4.b Performance of the PI controller in tracking an input reference signal of 1 Hz.

The parameters of the system used for the study are given in table 1.

Table 1: System parameters used in the study

Actuator Load	50 kg	Discharge coefficient, Cd	0.62
Supply Pressure, Ps	$4*10^6$ Pa	Area gradient servo valve, w	0.024m
Actuator ram area, *Ap*	$2.04X10^4$ m2	Bulk modulus, βe	2.2×10^8 Pa
Spring Constant, K	1000 N/m	Servo gain, Ks	$3.95*10^4$ m/V
Total leakage coefficient, Ctl	2.5×10^{11} m^3/(sPa)	Time constant, Ts	0.012
*k*1	10	*k*3	500
*k*2	200	*k*4	10

V. CONCLUSIONS

Electro hydraulic systems with its high-power density offers great benefits in earthmoving and construction industry. An autonomous operation with EHS would require an accurate motion control. This paper presents modelling and nonlinear motion control of an EHS using a state-feedback backstepping controller. EHS is modelled as a fourth order system and the simulation study was conducted to verify the control system performance. The tracking control of the proposed control system was analyzed in presence of non-linearities like friction and the performance was compared against a conventional PI controller. The results showed the proposed controller track the reference input signal accurately and the state system error quickly converges to steady-state value.

ACKNOWLEDGEMENTS

The authors would like to thank Dept of Electrical and Electronics Engineering and Bosch Centre of Excellence, UPES and for the support and encouragement.

REFERENCES

1. C. S. Meera, Gupta M. Kumar and M. Santhakumar, "Disturbance observer-assisted hybrid control for autonomous manipulation in a robotic backhoe," Arch. Mech. Eng., vol. 66, no. 2, pp. 153–169, 2019.
2. J. Yao, Z. Jiao, Y. Shang, and C. Huang, "Adaptive nonlinear optimal compensation control for electro-hydraulic load simulator," China J. Aeronaut., vol. 23, no. 6, pp. 720–733, Dec. 2010.
3. R. Fales and A. Kelkar, "Robust control design for a wheel loader using h∞ and feedback linearization-based methods," ISA T., vol. 48, no. 3, pp. 313–320, Jul. 2009.
4. Taylor CJ, Robertson D. State-dependent control of a hydraulically actuated nuclear decommissioning robot. Control Eng Pract 2013;21(12):1716–25
5. H. E. Merrit, Hydraulic Control System, Wiley and Sons, New York, 1967.
6. J. Yu, J. Zhuang, D.H. Yu, Feedback linearization control for an electro-hydraulic servo system using Lyapunov functions, J. Xi' Jiaotong Univ. 48 (7) (2014) 71–76.
7. B. Niu, J. Zhao, Barrier Lyapunov functions for the output tracking control of constrained nonlinear switched systems, Syst. Control Lett. 62 (2013) 963–971
8. Y.L. Qian, G. Ou, A. Maghareh, S.J. Dyke, Parametric identification of a servo-hydraulic actuator for real-time hybrid simulation, Mech. Syst. Signal Prrocess. 48 (2014) 260–273.
9. H. Modares, A. Alfi, M.M. Fateh, Parameter identification of chaotic dynamic systems through an improved particle swarm optimization, Expert Syst. Appl. 37 (2010) 3714–3720
10. W.L. Jiang, Z. Zheng, Y. Zhu, Y. Li, Demodulation for hydraulic pump fault signals based on local mean decomposition and improved adaptive multiscale morphology analysis, Mech. Syst. Signal Process. 58–59 (2015) 179–205.
11. Bobrow JE, Lum K. Adaptive, high bandwidth control of a hydraulic actuator. ASME J. Dynamic Systems, Measurement and Control, vol.118 pp.714-720,1996.
12. Seo, J., Venugopal, R., and Kenne, J.-P., 2007, "Feedback Linearization Based Control of a Rotational Hydraulic Drive," Control Eng. Pract., 15(12), pp. 1495–1507
13. Plummer AR. Feedback linearization for acceleration control of electrohydraulic actuators. Proc Inst Mech Eng, Part I: J Syst Control Eng 1997;211(6):395–406
14. Wonhee K, Donghoon S, Daehee W, Chung CC. Disturbance-observer-based position tracking controller in the presence of biased sinusoidal disturbance for electrohydraulic actuators. IEEE Trans Control Syst Technol 2013;21(6):2290–8.
15. Luo W, Fu Y, Wang M. Rejecting multi-stage and low-frequency resonance with disturbance observer and feedforward control for engine servo. Mechatronics 2012;22(6):819–26.
16. K. Guo, J. Wei, J. Fang, R. Feng, and X. Wang, "Position tracking control of electro-hydraulic single-rod actuator based on an extended disturbance observer," Mechatronics, vol. 27, pp. 47–56, 2015.
17. D. Won, W. Kim, D. Shin, and C. C. Chung, "High-gain disturbance observer-based backstepping control with output tracking error constraint for electro-hydraulic systems," IEEE Trans. Control Syst. Technol., vol. 23, no. 2, pp. 787–795, 2015.
18. Q. Guo, Y. Zhang, B. G. Celler, and S. W. Su, "Backstepping Control of Electro-Hydraulic System Based on Extended-State-Observer with Plant
19. Dynamics Largely Unknown," IEEE Trans. Ind. Electron., vol. 63, no. 11, pp. 6909–6920, 2016.
20. H. Yu, Z. Feng, and X. Wang, "Nonlinear control for a class of hydraulic servo system," J. Zhejiang Univ. A, vol. 5, no. 11, pp. 1413–1417, 2004.
21. W. Kim, D. Won, and C. Chung. Output feedback nonlinear control for electrohydraulic systems. Mechatronics, 22(6):766–777, 2012
22. D. Maneetham and N. Afzulpurkar, "Modeling, simulation and control of high speed nonlinear hydraulic servo system," World J. Model. Simul., vol. 6, no. 1, pp. 27–39, 2010.

AUTHORS PROFILE

Meera C S is pursuing her PhD in Robotics Engineering from UPES, Dehradun. She has done her masters in Robotics Engineering and Bachelors in Electronics and Instrumentation Engineering. Her research interests include robotics, automation, haptics and control. She has published 2 journal articles in International journals and has 7 conference articles published in various international conferences.

Dr. Mukul Kumar Gupta is currently working as an assistant professor (Selection Grade) in the department of Electrical and electronics engineering at UPES, Dehradun. He has more than 11 years of academic experience. He has guided 15 postgraduate students from robotics engineering and five-research scholar mainly in the area of robotics and control. He has published more than 30 research papers in various journals and conference proceedings. He has filed 02 Indian patent and internally 02 funded project. His research interests include robotics and control, machine learning, soft computing.