International Journal of Recent Technology and Engineering (IJRTE)
ISSN: 2277-3878 (Online), Volume-8 Issue-4, November 2019

Smart Navigation of Vehicles using RFID in Remote Environments

J. Jagadeesan, M Azhagiri, Yogesh Kumar L, Jaya Dinesh GR, Shanmuga Sivam S

Abstract*: Vehicles are one of the most important sources of transport and the number of vehicular deaths occurring in hill stations is increasing day by day. The main focus of this work is finding a feasible initiative using RFID technology for effective navigation with maximal safety and minimal risk in exceptional road conditions, which may be due to weather, climatic conditions or geographical locations. The hairpin bends and steep turns in hill station roads is a major cause of accidents. To prevent any untoward incidents, we propose to use the RFID (radio frequency) tags and detectors to alert the driver of the incoming turn or bend some 100 meters before the turning point. The RF tag will alert the driver in the form of an LED signal. Acceleration which is in a fixed coordinate system makes sure any changes in the angle are indicated by the accelerometer sensor connected to the Arduino. An LCD is connected to the Arduino which displays the sea level, left and right turn as text with the turning angle. Also, the buzzer attached to the Arduino gives a sound alert. In this paper, we will focus primarily on avoiding accidents and road crashes in hill stations and remote environments by making use of RFID technology

Keywords: Accelerometer, Arduino Nano, LCD, buzzer, RF tags, LED.

I. INTRODUCTION

In the world, there are many dangerous roads, such as mountain roads, narrow curve roads, T roads. Especially Fig 1 hill stations roads are more dangerous because due to certain environmental conditions we cannot identify the turning point. For example, Gulmarg Jammu and Manali Himachal Pradesh roads are the most dangerous road for traveling and detecting turning points [15]. At the curved paths, other parts of the road, along the curved end is invisible to the driver many times due to the blockage of viewpoint by the obstacles like trees, projected rocks etc[15]. Due to the presence of such curved turnings, and the carelessness on the part of the drivers, hundreds of people die in such types of hill stations. As per the Million Death Study (MDS) [15], 2.3 million death occurs in a year on an average, in India [2]. The main reason for such dangerous drives and loss of lives is due to the invisibility of the other end of the road at the curved turnings to the driver [15]. This demanding issue in such hill roads is a challenging problem.

One feasible approach and solution to this problem is to alert the driver, well in advance about the sharp turnings or T roads, in either direction, to the right or left so as to avoid these incidents. So along such roads with sharp curves and turnings or T roads, an ideal solution will be to install a sensor-based accident prevention system. This is done by keeping an RF receiving tag inside the car and placing the transmitting tag at the turning point. These RF Tags will interact with each other. While it reached the intimate curve before 100 m in the form of a LED blinking its left or right turn, The sensor of acceleration senses the acceleration of the sea level is set in the direction of the coordinate system. The path may be varied, which denotes the angle and indicates turning in the form of text to LCD. This sensor-based RF device may be useful in all situations where the driver will not be able to clearly see the turning point ahead, approaching from the end of the road [2]. This idea will enable us to facilitate a safe drive along all mountain roads and highways, thus reducing the number of accidents and consequently preventing the death of thousands of precious lives.

Fig 1: Turning point at hills station

II. RELATED WORKS

[12]MatthiasSchulze GerhardNocker, Konrad Bohm presented a European program to improve active safety. For the wireless communication systems, information must be sent from the vehicle to other vehicles or networks and allowing the transmission of high-value safety information in order to supplement real-time road information [9].

Manuscript published on November 30, 2019.
* Correspondence Author

Dr. J. Jagadeesan*, Professor, Computer Science and Engineering, SRM Institute of Science and Technology, Ramapuram Campus, Chennai, India.

M Azhagiri, Assistant Professor, Computer Science and Engineering, SRM Institute of Science and Technology, Ramapuram Campus, Chennai, India.

Yogesh kumar L, Student, Computer Science and Engineering, SRM Institute of Science and Technology, Ramapuram Campus, Chennai, India.

Jaya Dinesh GR, Student, Computer Science and Engineering, SRM Institute of Science and Technology, Ramapuram Campus, Chennai, India.

Shanmuga Sivam S, Student, Computer Science and Engineering, SRM Institute of Science and Technology, Ramapuram Campus, Chennai, India.

Related work was done by ErmannoAnsaldi, Turin; Stefano Re Fiorentin, Grugliasco, Andrea Saroldi, Turin, all of Italy Jan. 6, 1993, method and means for avoiding collision between a motor vehicle and obstacles. This invention concerns a method and means of avoiding collision between a motor vehicle is driven and obstacles in its way.

Anti-collision systems designed to track the environment surrounding the motor vehicle and to identify obstacles to the driver, especially in situations of poor or low visibility, usually due to fog, but also due to the lack of attention of the driver.A similar contribution was presented by [13] H.Sawant, Jindong dan Dept. of Electr. &Comput. Eng., Michigan Technol. Univ., Houghton, MI, USA, 2004[21].For an intelligent transportation system, Bluetooth and sensor networks were used. Wireless sensor network concepts and Bluetooth protocol vehicles can build mobile ad-hoc networks and share sensed information from on-board sensors. The integration of this information can make local traffic conditions better understood. It tests the viability of using Bluetooth to exchange data between vehicles. To study their application, coverage area and the likelihood of detection plots for isotropic and non-isotropic sensors are studied to avoid potential hazardous traffic situations. Bluetooth and sensor networks can be used.

Abhi R. Varma, Seema V. Arote, 2004, Accident Prevention Using Eye Blinking and Head Movement was presented.[8] The visual signs usually [8] characterizing a person's alertness level are collected as real-time data, which are routinely combined, from which the driver's fatigue rate[6] can be inferred. The eyelid motion, eye movement, movement of the head, facial expressions[14], etc. are characterized by the graphics used. A probabilistic model is devised to model the human fatigue and the visual indications are recorded. From the visual indications inferred, the fatigue is predicted.

Simultaneously using multiple visual signals and their systematic combination leads to a definition of exhaustion that is much more reliable and precise than using a single visual cue [8]. This device has been tested under real-life exhaustion [5] with the population from varied ethnic backgrounds and from people of different ages, with/without glasses, with respect to differing lighting conditions.

III. EXISTING SYSTEM

[5]The Microcontroller (Arduino Nano) LED light and ultrasonic sensor are used. The ultrasonic sensor sending and receiving role is nearly the same[15]. The signal is sent from an Ultrasonic sensor, in the form of pulses, emanating from the trigger stick. [15] It will be reflected when this signal reaches the curve, which is then processed by the echo ball. From echo, the signal is sent to the NANO Arduino microcontroller. [19] The Arduino NANO microcontroller processes these data and controls the LED that is connected to the NANO Arduino microcontroller's output board. LED is operated as per the command. The signal will not reflect in the absence of the curve. Therefore, the LED will not glow.

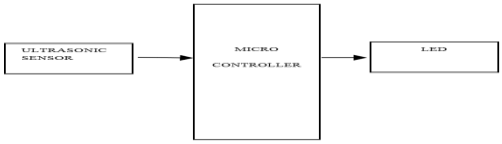

Fig 2: Ultrasonic Block Diagram

Components used in this system are list in the following[4]:

Microcontroller: [4]A tiny laptop on a single microcircuit can be a microcontroller. (Note that MCU for microcontroller unit or a UC for µ-controller). It is a compact microcircuit built in an associated embedded system to control a selected process. A typical microcontroller contains peripherals on a single chip of a processor,[4]the memory and input/output (I/O). This set up requires one or many CPUs (processor core), in addition to the memory and the programmable peripherals for input/output. Additionally, the program memory within the ferroelectric RAM form is normally enclosed on the chip, as a small amount of RAM[4].

Ultrasonic sensor: Check scope by ultrasonic detectors uses ultrasonic waves. Sunlight or black material does not influence the process, although it may be difficult to detect acoustically soft materials such as fabric. Using ultrasonic waves, ultrasonic detectors measure distance.

The detector's head emits an ultrasonic wave; it then collects the reflected wave from the target. Ultrasonic detectors are used to measure the distance up to the target, and this is done by calculating the time between emission and receipt [4].

IV. SMART NAVIGATION USING RFID

With RF tags Light-Emitting Diode (LED), accelerometer sensor and LCD, the turning point RF detection system is set in this proposed system. We incorporate the sensor and RF tags into the Arduino Uno. We monitor and control injuries and collisions in the hill stations in this process.

The RF tags interact with each other through the transmitting and receiving channels of electromagnetic waves. The accelerometer sensor senses the coordinate lines that the coordinate lines are deflected in their original path, displaying the deflection angle and turning angle also telling the direction of turning in the text type to the LCD.

In this process, we have another sign in the form of LED that one responds through the RF tags. The RF tags operate in the trembling mode of the hand and will either notify the right or left turn of the LED

The following deviation algorithm access the core for the proposed Smart Navigation of Vehicles using RFID in the Remote Environments system. It informs the driver about turning direction and its deviated angle. It makes sure that the vehicle doesn't go off course because of the driver's incorrect planning. It also assists the driver during hazardous driving conditions such as during heavy downpour, fog, snowfall, etc.

Deviation algorithm

1. Let X be the data stored in the tag
2. Let T be the turning degree
3. For all X do
4. If (X>0)
5. T=180+X
6. Else if(X<0)
7. T=180-X

8. End if
9. End for
10. For all T do
11. If(T>0 && T<180)
12. Print (T+" deep right curve")
13. Else if (T<180&& T>360)
14. Print (T+" deep left curve")
15. End if
16. End for

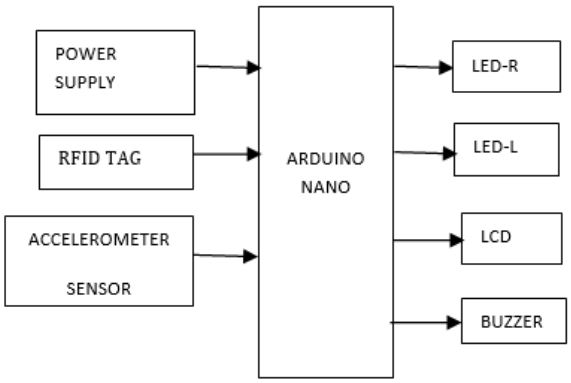

Fig 3: Smart Navigation Block Diagram

A. Microcontroller

The microcontroller is paired with RFID Reader as shown in the fig.3.the microcontroller gathers the information from the RFID tag through the reader and it processes the information present in the tag using deviation algorithm and indicates the angle with the direction to the driver through the LEDs and an LCD.

B. RFID System

The RFID system consists of the following vital parts: a scanning antenna, RFID Reader, RFID tag. These tags are fixed along the roadsides which contains information on the road directions and the angle. When the tag present in the roadside comes within range of a scanning antenna, the radio waves emitted by the tags are picked up by the antenna present in the RFID reader and is sent to the reader which decrypts the waves into information that is understandable by the microprocessor present in the system.

C. Accelerometer Sensor

The accelerometer sensor can be used to measure the sensor's acceleration. The acceleration is usually given in two or three components of the axis-vector that make up the acceleration of the sum/net. There are quite a few applications for accelerometers. You could think of a few already glass breakage alarm, remote controls for video games, or even digital bubble rates for when trying to hang a picture on the wall.

Typically, these accelerometers bring us two types of data:

- Static force applied to the sensor using gravity/orientation detection and
- Force/acceleration applied to sensor movement/strength detection.

D. LCD

The LCD informs the driver by displaying the output message along with angle which is processed by the microcontroller by using deviation algorithm. This output can be shown as soon as the microcontroller gathers in the information from the RFID tag

E. Buzzer

A buzzer or beeper is an audio signaling device that is linked with the microcontroller as shown in fig.3. It alerts the driver when the tag in the roadside comes within the range of scanning antenna.

F. LED[16]

A light-emitting diode (LED) is a semiconductor light source that emits light when the microcontroller processes the information in the tag when it comes to the range of scanning antenna. There are two LEDs paired with the microcontroller which are LED-L and LED-R. When there is a turn in the left direction the LED-L starts to glow and when there is a turn in the right direction the LED-R starts to glow. These LEDs are helpful indicating the driver about directions

V. RESULT

The idea behind this method is to alert the driver through LED light and LCD indication along with a buzzer as the automobile enters within 100m before the sharp curve[15]. The curve is detected with the help of RF Tag, which is interfaced with the Arduino Nano and the necessary sensors. The hardware implementation of the RF Tag-Based Turning point detection Using Arduino is shown below

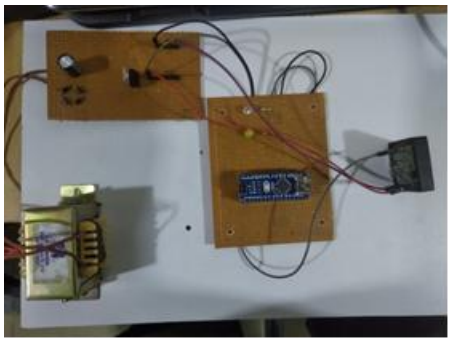

Fig 4: Hardware implementation of Smart Navigation method

VI. CONCLUSION

The main objective of this paper is to implement the RFID technology in remote environments (hill stations, steep bends, foggy areas, etc.) to reduce the number of accidents at sharp curves or sudden turns along the hill roads and other dangerous road paths [15]. On successful implementation of this technology, the number of accidents can be drastically reduced, and thousands of lives can be saved on curved roads and sharp turns. Moreover, this proposed model of RFID for road implementation can be further enhanced in the upcoming years with new-age technology like 5G spectrum, satellite tracking along with integrated concepts of machine learning to assess any on-road risk or threat in a real-time manner and continuously update the user (driver).

On a side note, this RFID technology can also be further hybridized with Geopositioning system that enables smart navigation which means this technology can pave the way for intelligent driving of driverless automobile ecosystem someday in the near future.

REFERENCES

1. Abhi R. Varma, Seema V. Arote," Accident Prevention Using Eye Blinking and Head Movement",2012.
2. P Anand Balaji, R Aadhivijay, P Deepa Sharma, "Hill road safety assistance using piezoelectric sensor", 2017 International Conference on Energy, Communication, Data Analytics and Soft Computing (ICECDS), 2017
3. Ashutha K., Ankitha K., "Error Minimization in BCH Codes", International Journal of Innovative Research in Electrical, Electronics, Instrumentation and Control Engineering (IJIREEICE), Vol. 4, Issue 5, pp. 402-405, May 2016.
4. Ermanno Ansaldi, Turin; Stefano Re Fiorentin, Grugliasco, Andrea Saroldi, Turin," method and means for avoiding collision between a motor vehicle and obstacles",1993.
5. Hua Qin, Yang Peng, and Wensheng Zhang," Vehicles on RFID Error-Cognitive Vehicle Localization in GPS-less Environments",2017.
6. Q.Ji, Z.Zhu, P.Lan. "Real-Time Nonintrusive Monitoring and Prediction of Driver Fatigue", IEEE Transactions on Vehicular Technology, 2004
7. Matthias Schulze Gerhard Nocker, Konrad Bohm," prevent A European program to improve active safety".
8. C.Mohamed Aslam, Ajmal Roshan T., Mohamed Sahal M.T., Najeeb N.A., Nisi K., "A smart vehicle for accident prevention using wireless black box and eyeblink sensing technology along with seat belt controlled ignition system", 2016, Online International Conference on Green Engineering and Technologies(IC-GET), 2016.
9. Saravanan K., ArunkumarThangavelu, K. Rameshbabu. "A Middleware Architectural framework for Vehicular Safety over VANET (InVANET)", 2009 First International Conference on Networks & Communications, 2009.
10. H. Sawant, Jindong dan," Using Bluetooth and sensor networks for intelligent transportation systems",2004.
11. Tao Jing, Xing Wei, Wei Cheng, Mingyang Guan, Liran, Yan Huo, and Xiuzhen," An Efficient Scheme for Tag Information Update in RFID Systems on Roads",2016.
12. Tae-Kyung Moon, Jun-Nam Oh, Hyuck-Min Na, Pal-Joo Yoon. "Integration of Car-to-Car Communication into IAV", SAE International, 2009.
13. V.Tamilarasan, T.Ravichandran, M.Soundariya, R.Sandeep, K.Saravanavel. "Gas Level Detection and Automatic Booking Using IoT", 2019 5th International Conference on Advanced Computing & Communication Systems (ICACCS), 2019-10-20 [13]
14. Xiao Fan, Baocai Yin, Yanfeng Sun. "Nonintrusive Driver Fatigue Detection", 2008 IEEE International Conference on Networking, Sensing and Control, 2008.
15. www.ijireeice.com (Internet Source)
16. www.ijiert.org (Internet Source)
17. Student paper submitted to GL Bajaj Institute of Technology and Management.
18. Onlinelibrary.wiley.com (Internet Source)
19. Submitted to Indian Institute of Technology, Bombay
20. Student paper, submitted to the University of Moratuwa.
21. Student paper, submitted to Kingston University.

AUTHORS PROFILE

Dr. J. Jagadeesan is working as professor in SRM Institute of Science and Technology, Ramapuram Campus, Chennai, India and has published more than 30+ research papers in many journals. He has written a book on "Classification of normal and Pathological voice using SVM and RBFNN".

M Azhagiri is working as assistant professor in SRM Institute of Science and Technology, Ramapuram Campus, Chennai, India and has published many research papers. His research interests are Computer Networks, Network Security, Data Mining.

Yogesh Kumar L is studying Computer Science and Engineering in SRM Institute of Science and Technology, Ramapuram Campus, Chennai, India. He has participated in many technological workshops, hackathons and his field of interest is in software development.

Jaya Dinesh GR is studying Computer Science and Engineering in SRM Institute of Science and Technology, Ramapuram Campus, Chennai, India. His interests are in game development. He has participated in many hackathon events. He is an avid enthusiast of latest trends in technologies.

Shanmuga Sivam S is studying Computer Science and Engineering in SRM Institute of Science and Technology, Ramapuram Campus, Chennai, India. His interests are in marketing, administration and human resource management. He has participated in many technological workshops, hackathons.