International Journal of Recent Technology and Engineering (IJRTE)
ISSN: 2277-3878 (Online), Volume-8 Issue-4, November 2019

Speed Control Analysis of Permanent Magnet DC motor with Zeta Converter

T.Nandhini Priya

Abstract*: This Paper explains the performance analysis of Permanent Magnet DC motor. Here the Solar PV cells are used as a source and connected through the zeta converter and the DC voltage of the converter is fed to armature of the DC motor.The Zeta Converter is a fourth order DC to DC converter made up of two inductors and two capacitors operating as either step up or step down.and The Performance such as Speed are analyzed with MATLAB simulink. The results of the plots are discussed in the below studies.

***Index Terms*: PV-Photo Voltaic Cells, Zeta converter, Solar Powered,**

I. INTRODUCTION

In the initial stage of power energy system development, the electricity is supplied to the users in a type of bulk electric transmission system. Due to the increase in abundant solar energy and other renewable energy system available, the recent systems use the renewable energy for building bulk amount of power. Besides this there are some weak points in the area of flexibleness and securities. Besides that, fossil fuel price is fluctuating due to the global economic and limited resource, it is found that producing electricity with conventional fossil fuel will lead to the environment pollution.[1]. Among the renewable resources, PV system has many added advantage and important energy source for the future. With the recent advancement in the technology, solar energy systems are easily available for industrial and domestic use with minimum maintenance. Output power induced in the photovoltaic Solar cells convert energy from unlimited source 'the sun' into useful energy. PV cells develop an environment friendly alternative way for energy production using sun. PV system has zero running cost energy is the energy input. The output power induced in the photovoltaic depends on solar radiation and temperature of the solar cells. Photo voltaic modules have a very low conversion efficiency of around 15% for the manufactured ones. The permanent magnet dc motors differ from DC motor in absence of the field winding. Instead of the field winding, a permanent magnet with proper dimensions is used. The torque of the motor is said to be constant and the speed can be varied above and below of rated speed. The common method of controlling the speed in the PMDC motor is by varying the input voltage of the motor and the methods already available are automatic sensor less speed control[2], using matrix converter[3], low rotation speed setting technique, Arduino controller.

In this paper, the speed control technique is enabled by with the solar cells which eco friendly and DC-DC converter as Zeta converter. The numerous solar cells are connected in series and parallel the total current following through the solar cell and potential developed across the solar cells are calibrated and the PV ratings of the solar panel is taken as a solar DC power which can be stored in battery for offline usage of power[1]. The DC power obtained from the solar PV is connected to zeta converter. This zeta converter is a fourth order non linear system. The output DC power from the zeta converter is connected to the permanent magnet DC motor and the performance analysis for various input levels are analyzed and tabulated.

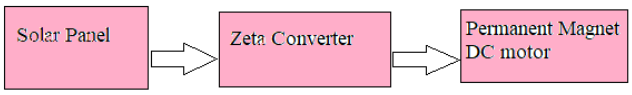

Fig.1(a) Block diagram of Proposed System

II. SOLAR PV PANEL

2.1 Mathematical Modeling of Solar PV Panel

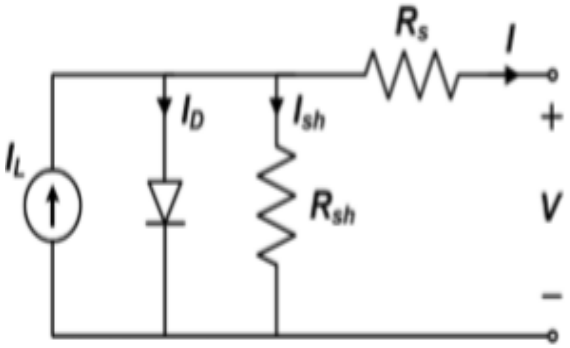

Fig.2(a) Equivalent circuit of Solar cell

Manuscript published on November 30, 2019.
* Correspondence Author
T.Nandhini Priya*, Department of Electrical and Electronics Engineering,Vel Tech Multi Tech Dr.Rangarajan Dr.Sakanthala Engineering College,Chennai,India.

In the above circuit,
R_s represents series resistance of PN junction cell
R_{sh} represents shunt resistance which is inversely in relation with leakage current to ground.
I_D and I_{sh} represents shunt resistance which is inverse in relation to leakage
current to the ground.

$$I = I_{ph} - (I_d + I_{sh})$$

According to this analysis, the solar PV panel is simulated with the help of MATLAB simulink.

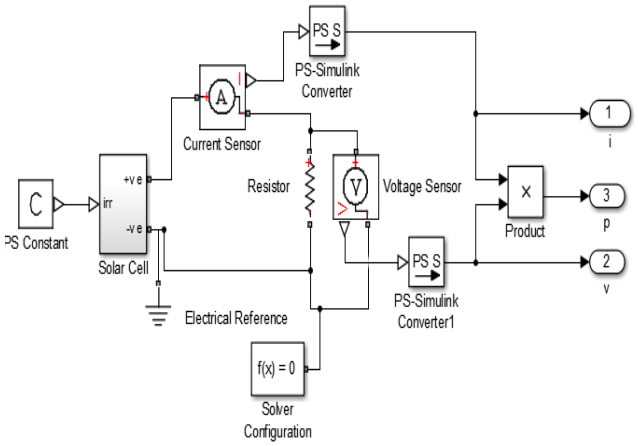

Fig.2(b) Solar Cell simulation

The Solar Cell is connected in a series and Parallel combination, to build a DC voltage of 12V. This voltage can also be stored in a battery[2].This Voltage is the input for the zeta converter which acts as a DC to DC Converter.
The output of the PV panel is shown below.

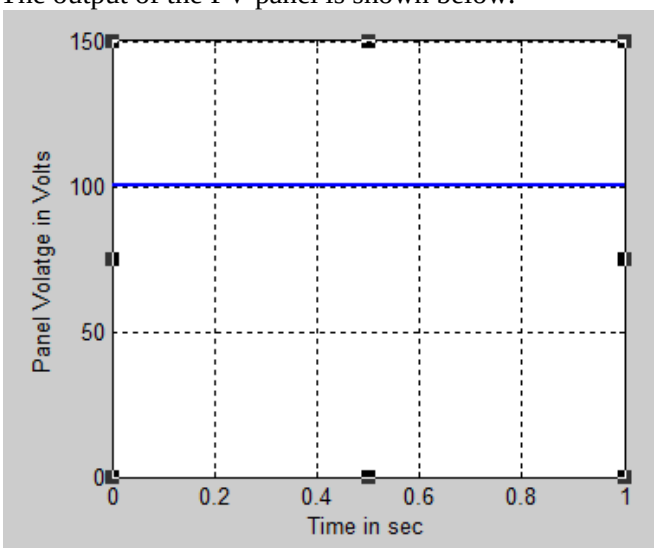

Fig.2(c) Panel Voltage

II. ZETA CONVERTER

Zeta converter is a fourth order non linear system, it can be used a input as buck-boost-buck converter and the output can be boost-buck-boost converter.

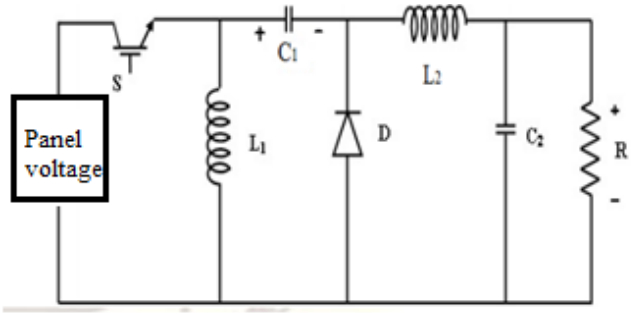

Fig.3(c) Circuit Diagram of Zeta Converter

It can act as a electronics circuit which converts source of direct current (DC) from one voltage level to another level. It is switched DC-DC converter which provides a regulated and stepped up output voltage.[4]

3.1 Modes of Operation

Zeta converter has two modes of operation,
Mode I: When the switch is ON,the diode is OFF.During this period,the current through inductor L_1, L_2 drawn from the voltage source V_s.This mode is called **charging mode.**The circuit of ON diode is shown in fig 3.(b)

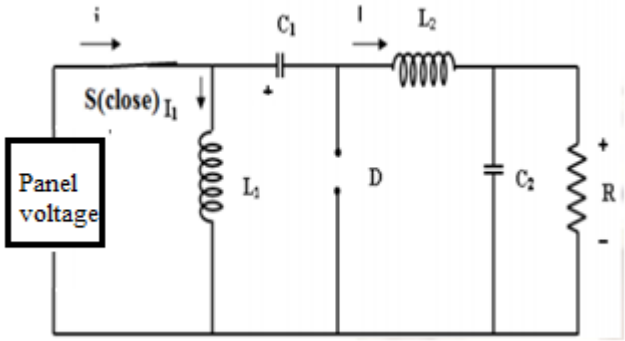

Fig.3(b) Switch is in ON position

Mode II: When the switch is OFF,the diode is ON.During this period,This mode is called **discharging mode.**Since the energy stored in inductor is given to load R.The circuit of ON diode is shown in fig 3.(c)

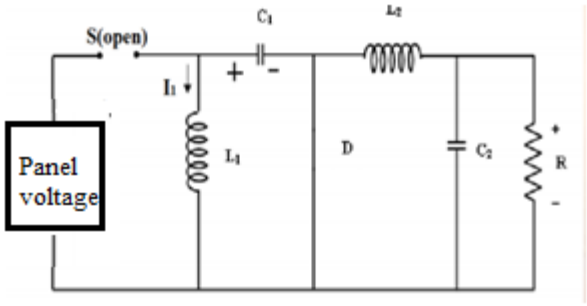

Fig.3(c) Switch is in OFF position

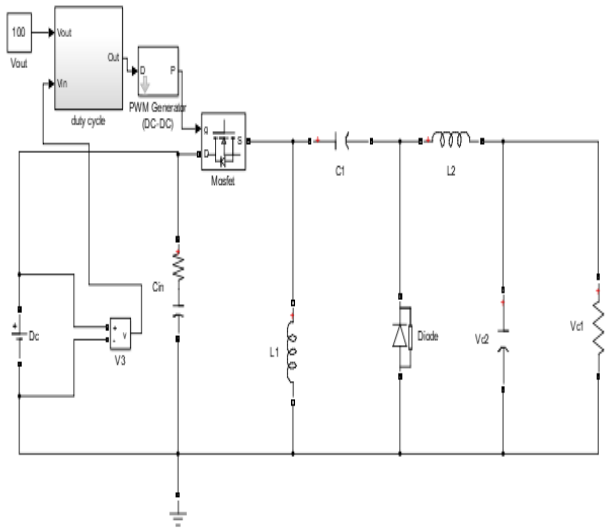

Fig.3(d) MATLAB Circuit of Zeta Converter

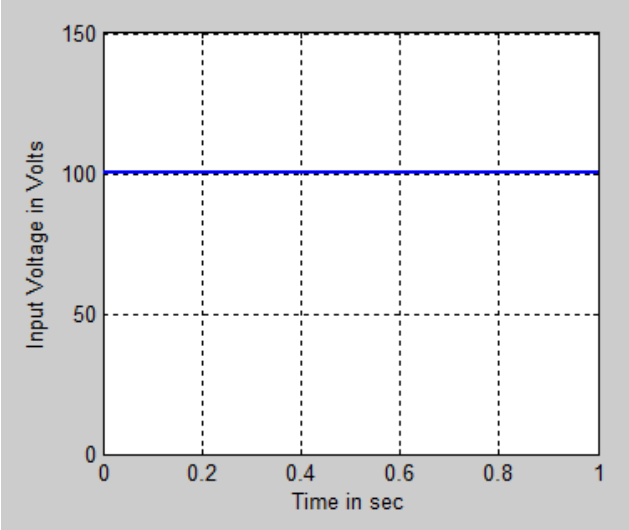

Fig.3(e) Input Voltage of Zeta Converter

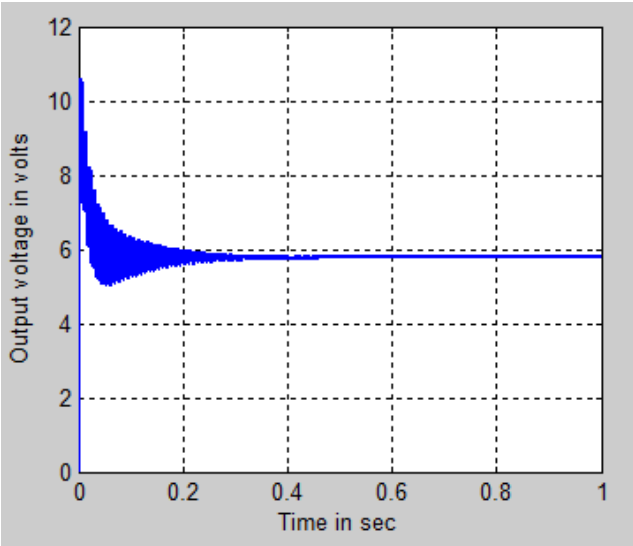

Fig.3(d) Output Voltage of Zeta Converter

IV. PERMANENT MAGNET DC MOTOR

4.1 Introduction of Permanent Magnet DC motor

The permanent magnet DC motor is a type of DC motor, which does not have a field winding. It has a permanent magnet to supply the field flux. Permanent magnet has a very good starting torque along with a nominal speed value.

As the field carries the fixed supply, the speed of the motor cannot be varied. So, the permanent magnet is preferred for low ranges.

However, large permanent magnets are costly, as well as dangerous and difficult to be assembled. Permanent magnet are most suited for small motors to eliminate power consumption of the field winding.

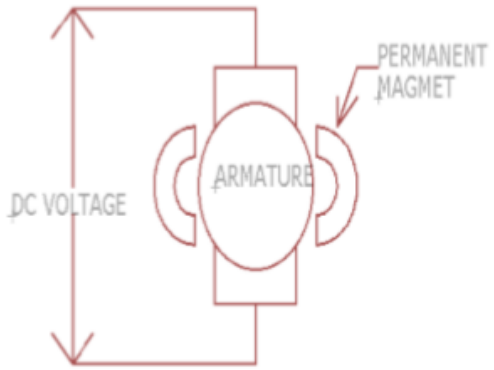

4.2 Experimental Analysis of Permanent Magnet DC motor

The permanent Magnet DC motor speed is analyzed by varying the solar panel voltage. The solar panel designed has the ability to provide a DC voltage output from 40V to 150V DC.

For an input of 150V from the solar panel, the Speed of the Permanent Magnet DC motor is 83.5 revolutions per minute.

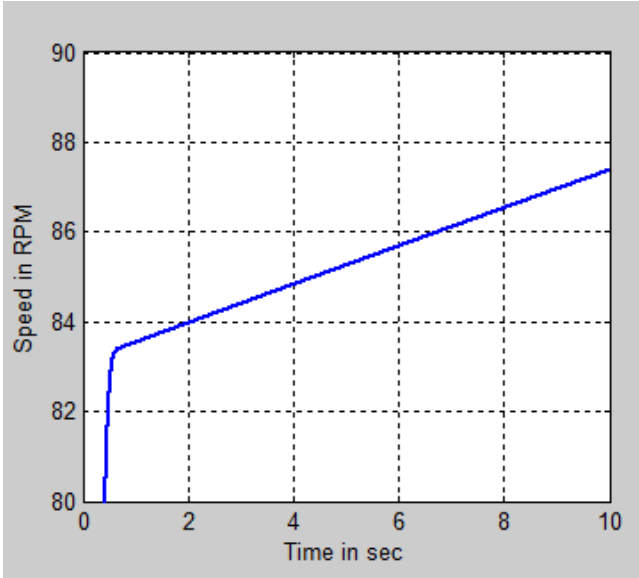

For an input of 125V from the solar panel, the Speed of the Permanent Magnet DC motor is 69 revolutions per minute.

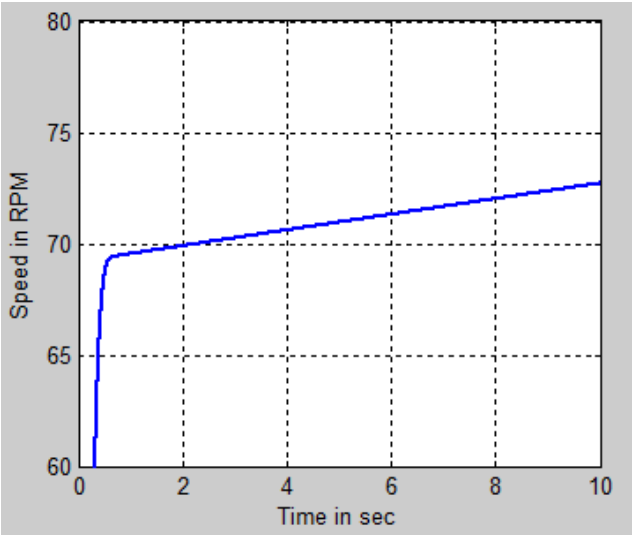

For an input of 70 V from the solar panel, the Speed of the Permanent Magnet DC motor is 140 revolutions per minute.It is clear from the above plots that due to the connection of zeta converter, as the input voltage of the zeta converter is reduced, the speed of the permanent magnet DC motor is reduced. Thus the speed control technique is possible with PV with zeta converter circuit.

III. CONCLUSION

The permanent magnet DC motors are used for low power applications. So the speed of the motor is also less. The weight and size of the permanent magnet is more due to the absence of field winding.

This motor is extensively used in industries as biomedical drives, transport vehicles, biomedical equipment and household appliances.

REFERENCES

1. T.Nandhini Priya,B.V.Nagaraj,Ramakrishna kammer,Sanketha "Replenshing Water Source for wildlife using hybrid Energy Sources," in Asian Journal of Electrical Science, vol. 8, No.S1,2019,pp15-18.
2. Idris A,Baharom R,Hamzah N R and Hamzah M K 2013 Controlled AC-DC converter fed permanent magnet DC motor using single phase matrix converter,Power Engineering and Optimisation Conference (PEOCO),2013 IEEE 7th International 764.
3. Chu H, Tao W, Gao B ,Liu Q and Chen H 2016 Speed Control of permanent magnet DC motor subjected to uncertainty and disturbance Control Conference (CCC),35th Chinese 4664.
4. M.Sowmya Smitha Raj,B.Urmila, PV fed Zeta Converter in International Journal of Engineering Research and Applications,Vol 2,issue 4,JulAug 2013.
5. S Syukriyadin et al.,Permanent magnet DC motor control by using arduino and motor drive model in 2018 IOP Conf.

AUTHOR PROFILE

T.Nandhini Priya, Assistant Professor, Vel Tech Multi Tech Dr.Rangarajan Dr.Sakunlatha Engineering College, Chennai, Tamil Nadu,India