International Journal of Recent Technology and Engineering (IJRTE)
ISSN: 2277-3878, Volume-8 Issue-4, November 2019

Wired Sensor Systems for Water Quality Monitoring

Minu.M.S, Priyanka Kumari, Aniket Kumar Singh, Avinash Singh

Abstract-- ***Water is an essential need and elixir of life. People all the world are fighting for their drinking water in order to keep it clean. No matter in what form it is rivers, lakes etc people have taken extreme measures to keep their water drinkable and useable for both humans and animals. Water is a significant characteristic asset without which no life can be envisioned. In any case, individuals misuse this real asset and cause wastage of water. We provide energy saving solution for monitoring the water quality. The proposed idea will build an IOT based sensor which monitors the pH, temperature, conductivity, dissolved oxygen, turbidity, bacteria, etc. present in the water collected. The sensors collect data and send it through a network. Then server will upload the data to the cloud. The remote water station will read the collected data and determine the quality of water. Henceforth, this application can be used on bigger scales, saves time and man-power.***

Keywords-- ***IOT, Water Quality Monitoring, Wired Sensor Systems***

I. INTRODUCTION

Water is a substance without which we can't envision our life. Moreover, extinguishing our thirst, this straightforward compound substance is utilized for a few different purposes. It is utilized to achieve a few family undertakings. Water is additionally utilized for horticultural reason and is required for modern use. Water, known to be the widespread dissolvable, assumes a key job in the survival of different types of life on earth. It is utilized for different purposes, for example, drinking, cleaning, cooking, washing and washing. Environmental change, water shortage ,populace development and cities have been expanding the duty of water utilities to guarantee a practical water management system for cities.[12] Water quality implies the compound, physical and natural characteristics of water .Water is very essential for a living organism to survive including humans.

Manuscript published on November 30, 2019.
* Correspondence Author
Minu.M.S*., Computer Science Engineering , SRM Institute of Science and technology, Chennai, India. Email: msminu1990@gmail.com
Priyanka kumari, Computer Science Engineering , SRM Institute of Science and technology ,Chennai ,India, Email: anshuedu28@gmail.com
Aniket kumar singh, Computer Science Engineering , SRM Institute of Science and technology, Chennai, India. Email: masteraniketkumarsingh2@gmail.com
Avinash singh, Computer Science Engineering, SRM Institute of Science and technology, Chennai, India. Email: avinashsingh4136@gmail.com

So it makes water treatment all the more necessary. The advancement of the correspondence innovations empowers family units and water providers to access water use information through AMR frameworks or savvy water. [12]The determination of weather the water is clean is done physically.

It is done like this because huge labour is required and water is wasted in a lot of spots. [6]Estimating the utilization is a basic need in numerous residential water treatment plants. Exact estimations are significant in water dissemination plants since it can either prompt making benefit or assuming misfortune. In different situations, measurement are taken physically by people or inability to take the measurements affect the outcomes. [7]

So as to give the open an increasingly agreeable and solid condition, the techniques and arrangements on upgrading water the board have done a great deal of intrigue and being created repeatedly. The essential thought of improving the water executives is to control the related parameters which are period, water flow quality, temperature, leakage, etc. To have expandable, trusted, less control utilization and low generation cost. ZigBee is a fitting remote convention to build the remote sensor organize [8] Generally the quality of water checked or is used by checking if the water is drinkable for humans or not or its organic frameworks. The term water quality (WQ) portrays the physical, compound, and the natural characteristics of the precious gift to mankind, water, while the thought of investigating and looking at properties of water on an infrequent reason is delineated as WQM[1] water quality measurement structures can be recognized in a strong way through the wire of remote sensor headways, for example, WirelessSNs [3][5][11][12][13].WSN is a way of recording and storing data. It measures the physical conditions of the area on which it is applied. It deals with all the data that is recorded. WirelessSNs measure normal conditions like heat, vibration, sullying levels, moisture, breeze, and so forth.

A wiredSNs is a device or a small system its detects the change in the environment and then sends the gathered information. It is regularly used with variety of other gadgets.The major problems in the area of wireless sensor network is the inability to keep up with the power management and, The sensors eventually gets drain out of battery and that problem can cause a lot of to overcome this problem, WET (wireless energy transmission)[4] is proposed which will overcome this problem more efficiently. Water has an incredible effect in the present life since the amount of utilization is expanded in light of the populace development, what's more, the accessibility is diminished.

Change in water the board through various arrangements, for example, access to water for the agribusiness, overseeing precipitation encouraged water, and so forth can bring change in water maintenance. Water being the most important part of the earth and all the living creatures are comprised of water one way or the other.

But in today's generation we are facing drastic challenges regarding water scarcity and management. In many of the challenges is the leakage of water through pipelines during transportation [8]. To counter this issue, water spillage location framework will be utilized to guarantee exact checking framework for water spillage. The common water assets checking is a significant issue particularly from the perspective of condition conservation and human social insurance. We have built up a WSN framework [3] to screen common water assets quality. It comprises of sensors for the detecting of physical and synthetic properties of water, and frameworks including remote correspondence module, control module and the interface among sensors and remote correspondence module.

Wireless sensor networks(WSNs) comprise of various sensor hubs that can work together with one another to perform checking undertakings. WSNs have been broadly sent on the ground, vehicles, structures, and so forth for empowering applications, e.g., target recognition, wellbeing related, and traffic observing system[3].

WSNs are developing innovation and a key empowering influence for a huge number of physical-world detecting applications. They have exhibited excellent highlights, for example, cost viability, adaptability, versatility, information convey unwavering quality, control proficiency, and straightforward installation [11].

The main sensors requires constant energy to run and to give accurate results. So it's better to use Wired sensor networks instead of WSNs. The positives of using wired sensors is that they will never run out of power and we can use fibre optic networks for high speed data transfers. The data will be reliable and accurate and will reach the water centres very quickly. The fundamental work is to augment the data quality and limit the vitality misfortune and vitality utilization. We will also equip the sensors with some lithium ion batters just in case if a power cut happens. This clearly shows that using wired network in this day and age where wireless network is still developing is a safe and a better option.

II. RELATED WORKS

The need of power in low power networks has always been an area of debate and now we have the solution in the form of WET (wireless energy transmission) [4], where in which the committed RF vitality origin is utilized to revive the hubs of sensors, and makes them work until the time ends. The sensor should be in effective radius for efficient and optimal charging. The enhancement model is proposed to limit the quantity of chargers expected to revive the components of a system in a multi-bounce arrangement.

The water will be given out in sufficient quantity and that will be controlled by UDSS (urban decision support system) [2] which is attached to an android application to collect data. The ATM-based system is proposed to keep in check of water and pay according to the use of a house or industry. The system is secured with security card to provide safety and ease of keeping track of water saved or overused.

The water leakage detection unit which is PCB (small printed circuit board) [8] consists of many sensors and measure the flow of water to detect any leakage. The customary way like GPR (ground infiltrating radar) , PIG(pipeline investigation check) and required the estimating of the acoustic sign which needs a high examining rate which causes the hubs to intake large amount power and work for a shorter amount of time on the restricted power supply accessible. WSN system is introduced which is ZigBee [8] technology , which is low power utilization and minimal effort remote system which targets remote access to applications. framework [3] to screen common water assets quality. It comprises of sensors for the detecting of physical and synthetic properties of water, and frameworks including the roads are very costly and only costly sensors can withstand the harsh weather and the pressure that a normal street puts on it. The cheaper sensors won't even last a week.

The water will be checked utilizing Wireless Sensor Network and remote correspondence module utilizing Real-time correspondence [3] and wide extend/region observing and this guarantees exact and precise water quality observing. The product control in the framework [3] makes it considerably progressively adaptable and can be controlled through the application. The module follows BUS-type [3] system which has master (main) and slave module configuration.

So as to create a framework programmed without the man association and to spare the water a mechanized utilizing the method used by the people in the paper[6] correspondence is proposed. The method is a correspondence worldview which includes correspondence between hubs without direct man association. Checking of water quality determines if the water is fit for all plants, humans and animals.M2M correspondence totally creates new application in observing the water quality. The parameters to be checked are pH, Fluoride, turbidity etc.

There are many problems with using WSNs that are clearly visible when we start using them. That's why it's better for us to use wired networks.

Work from *Dependable Structural Using Wireless sensor network* clearly shows how a faulty sensor in their wireless network can cost someone's life[2].Although numerous techniques towards the area of fault detection have been proposed but we can take the risk of putting someone's life in danger if the wireless system stops working or when the system shows connectivity issues.

Work from *Versatile Real-Time Traffic Monitoring Systems Using Wireless Smart Sensors Networks* shows how easy it is to track data using wireless sensors on the road[10]. But the main problem with that system is the main sensors that we will use on Work from *Joint Optimal Placement, Routing, and Flow assignment in wireless sensor Networks for Structural Health Monitoring* shows how wireless sensors can be used to check joint placement but the main drawback of these sensors are that they are not fully optimal[11]

and wired sensors are fully optimal, we know that wireless is more convenient but we need our sensors to be fully optimal until wireless sensors don't reach that point it's better to use the wired sensors.

Work from *Application of wireless sensor network in water quality monitoring* shows how the wireless sensors can be utilized to screen the water quality [13]. And how it eliminates the wire related problems but using the wireless system have it's own drawbacks like there is no safety, the transmission stability is not high and Signal becomes weaker as distant increases. To avoid all of these problems we can just use the wire again and gain a couple of advantages too.

Work from *Smart water flow monitoring and forecasting system* shows how because of tremendous increment in populace all inclusive and furthermore as a result of climatic changes the crisp water asset is under pressure. A savvy water appropriation framework would an ongoing system with stream sensors and different gadgets would consistently screen the conveyance framework. [6]

Work from *A time-synchronised Zigbee building network for smart water management* shows how a method using ZigBee building network(TS-ZBN) will be given to the executives. The goal of TS-ZBN is to gather the detected information of entire structure and move to the backend part of the server.

III. IMPLEMENTATION

The typical laboratory-based method for Water Quality Monitoring consists of first the Water Sample collection then the collected water is transported to the water treatment centers there the water is stored. The stored water is then tested and treated and then it is analyzed for microbial and chemical pollutants. Then after doing all the processes decision making happens, it decides that the water is fit for distributing or not.

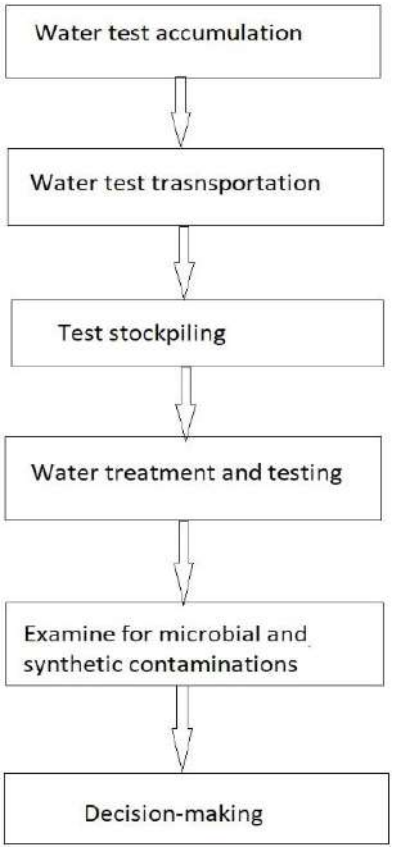

Fig.1. Laboratory-based method for WQM

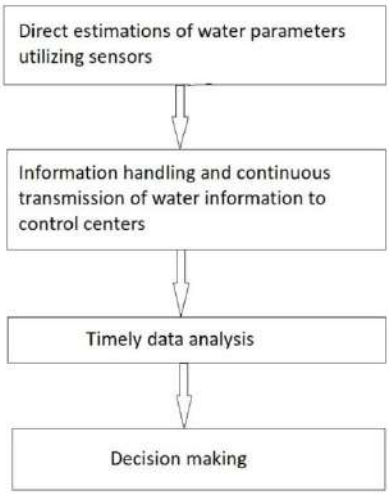

Fig. 2. WSN-based method for WQM

As we can see that this process is very long and it requires a lot of man power. Instead of this method we can use our method that is very simple and requires a lot less of man power. This ends up saving us a lot of time and energy. It comprises of Direct estimations of water parameters utilizing sensors then information preparing occurs and continuous transmission of water information to control focuses. There they can timely analyze the data and then make the decision of distributing the water.

HARDWARE-

A typical water quality sensor node consists of the following things-

1. Sensor– These sensors will be responsible for sensing all the parameters that are needed to be examined.

The water quality parameters estimated incorporate pH, Chloride, oxidation reduction potential, Cupric, turbidity, heat and dissolved ions Fluoride, Perchlorate , Nitrate, dissolved oxygen, Iodide ,conductivity, Bromide , Silver, Sodium, Ammonia, Lithium, Magnesium, Nitrite, Calcium, Potassium, Fluoroborate . Usually we have various sensors for every one of the parameter however we can introduce different sensors in our one unit.

2. AC PS –We will be using Alternate Current Power Supply as our power supply as it will be better than regularly charging the batteries of the wireless sensors and it will become that much more convenient, just switch on a switch and the sensors will start working.

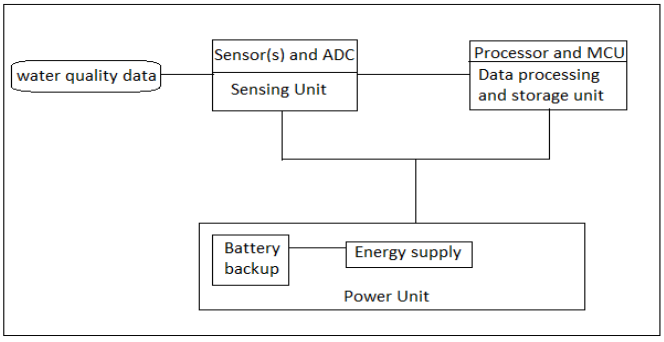

Fig. 3. Structure of system node

3. ADC - ADC is analog to digital to converter, as our sensors can only measure in analog it is there to convert the measurement into digital format.

4. Microprocessor and a memory chip-It's the processing power of our unit, processing of the data captured by the sensors will be done here. It will give a number or a measure to the parameter it is measuring and then the processed data will be stored in our memory chip. Then the stored data will be sent to the work stations where they will identify that if the parameter level is safe for distribution or not.

5. A Small Battery -It can be put into the node just in case if power cuts happen it will provide our unit a power supply for some amount of time. It will be useful for a couple of readings and our sensor will still be able to function.

Here the sensing unit of the wired sensors will be sensing the quality of the data then the data will be processed by the processing unit of the wired sensor and then the data is sent to the local server while the power unit provides power to the wired sensors

TABLE-I: ENERGY ISSUES IN WSN

Sources for energy	Vibration	Solar	Heat	Water	Wind	Electricity
Technique for generating power	Electricity generation through applying stress on piezoelectric materials	Using solar panels we transform light energy to electrical energy	Using different temperatures to generate electricity	Rotating a turbine using water pressure resulting in generating electricity	Rotating a turbine using pressure of the wind resulting in generating electricity	Direct current access through a power socket
Advantages	Foreseeable Efficient	Power can be generated anytime using artificial light Sunlight can be foreseen using forecasting	Predictable	Can store large amounts in rainy season for later use.	Works with little flow	Fully controllable Predictable Available in both areas
Disadvantages	Wastage of charge Not consistent Unmanageable	High cost Heavy Not efficient	Unmanageable Not efficient	Water is not appropriate For electrical components Not efficient	Unpredictable Not efficient	Quality of wires used is variable Costly

Area for use	Tracking railways	Biomedical	Used in small-scale industries.	Measuring water Aquafarming	Treatment of water Agriculture	Water quality measurement and various other applications.

ARCHITECTURE DIAGRAM

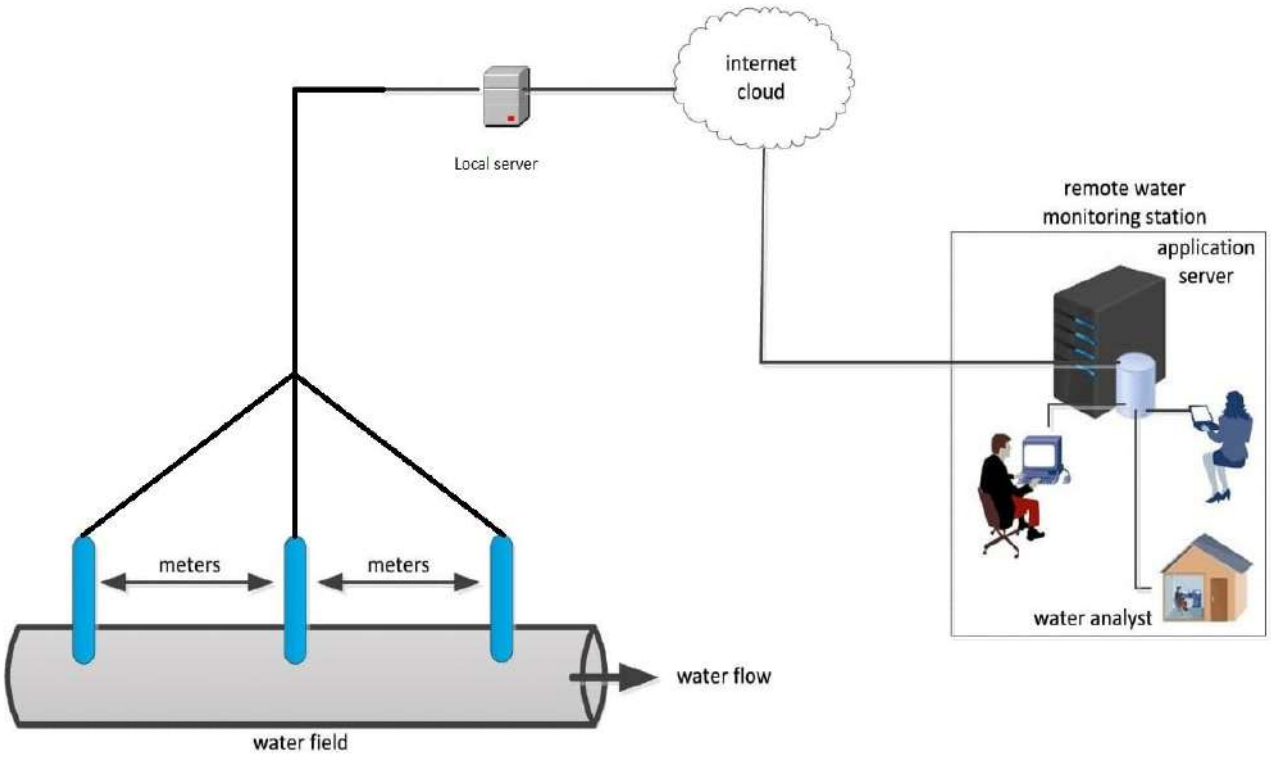

Fig.4. Architecture for Wired WQM

In our system our sensors will be applied in the water field with some distance between them. The sensors will collect the raw data and then transfer it to the local network server present at the station. The local server will then upload the data to the internet cloud and then that data will be collected by the water treatment centers. They will see the numbers and then decide how the water should be treated. After treating the water some testing will be done and after the it will be distributed.

IV. MODEL SETUP

The wired sensor network is best suitable for this kind of management system because of its accuracy and independency. There are scenarios where the wireless sensors has stopped working under crucial moment and it's inacceptable. Hence the introduction of wired sensor networks. Using wired sensor network makes it easy to find where the fault is at and also reduces the maintenance cost of the whole system.

The typical model comprises of wired sensors, each having its ability to analyse the quality water. The sensors used are turbidity sensor, pH sensor and Biosensors.

These sensors are fitted with batteries, to guarantee that the work proceeds even when the power isn't accessible. The sensors are also equipped with microprocessors and controllers and the Analog to digital converter is used to get the readings in digital format. The sample of the water will be sent to every one of these sensors, and the quality found will at that point be compared and contrasted and the information esteems on cloud database which is considered as reasonable for drinking after then, it will choose whether the water is fit for drinking or not.

These Sensors sends information to the cloud database. The information of the data sent by sensors is sent using real-time transmissions, which fundamentally expels all the idleness or delay during transmission. This data is then analysed by data analytics and the quality is determined. Contingent upon the outcomes the issue is resolved which is to treat the water or to send it to the household or industrial purposes.

V. CONCLUSION

The traditional technique for estimating water quality was somewhat moderate and required labour and numerous different assets which could be tedious and henceforth this new strategy for utilizing wired sensors to check the ongoing water quality is the most productive and cost-effective way. The problem of battery consumption and charging the sensors regularly is resolved and thus we get a system which is ready to work at any time.

REFERENCES

1. Segun 0. Olatinwo and Trudi-H. Joubert, Senior Member IEEE Energy Efficient Solutions in Wireless Sensor Systems for Water Quality Monitoring:A Review
2. Md Zakirul Alam Bhijan Guojun Wang Jie Wang Jianoj Cao.Xuefeng lies Tian wang Dependable Structural Health Monitoring Using wireless Sensor Network, IEEE Transactions on dependable and secure Computing
3. Madhumathi R , Dharshana R, Reshma Sultana ," Smart water ATM in India using cloud computing.", 2017 International Conference on Advances in Computing, Communications and Informatics (ICACCI)
4. Tomoaki Kageyama, Masashi Miura, Akihiro Maeda, Akihiro Mori, Sang-Seok Le, "A Wireless Sensor Network Platform for Water Quality Monitoring", 2016 IEEE SENSORS
5. Weiqiang Xu, Weiwei Cheng, Yushu Zhang, Qingjiang Shi, Xiaodong Wang," On the Optimization Model for Multi-Hop Information Transmission and Energy Transfer in TDMA-Based Wireless Sensor Networks", IEEE Communications Letters (Volume: 21 , Issue: 5 , May 2017)
6. Anto Merline ManoharanVimalathithan Rathinasabapathy , "Smart Water Quality Monitoring and metering Using LORA for Smart villages", 2nd international Conference on Smart grid and smart cities.
7. Gaurav Gosavi, Gajanan Gawde,.Gautam Gosavi," Smart Water Flow Monitoring and Forecasting System", 2017 2nd IEEE International Conference ON recent Trends in Electronics Information and communication Technology
8. Chung Kit Wu Hongxu Zhu.Loi Lei Lai.Anna S.F. Chang Fengjun Li Kim Fung Tsung Roy Kalawsky, "A Time-synchronized ZigBee Building Network for smart water management", 2017 IEEE 15th International Conference on Industrial Informatics (INDIN)
9. M.JayaLakshmi Dr.V.Gomathi, "AN ENHANCED UNDERGROUND PIPELINE WATER LEAKAGE MONITORING AND DETECTION SYSTEM USING WIRELESS SENSOR NETWORK", 2015 International Conference on Soft-Computing and Network Security (ICSNS -2015), Feb. 25 – 27, 2015, Coimbatore, INDIA
10. Walid Balid,Hasan Tafish,Hazim H. Refai, "Versatile Real-time Traffic Monitoring System Using Wireless Smart sensors Networks", IEEE Wireless Communication and networking conference
11. Mohamed Elsersy,Tarek Mohamed Elfouly, Mohamed Hossam Ahmed, 'Joint Optimal Placement, Routing, and Flow Assignment in wireless Sensor Networks for Structural Health Monitoring.",IEEE SENSORS JOURNAL
12. Elias farah,Isam shahrour, "Smart water for Leakage detection:Feedback about the use of automated meter reading technology", 2017 Sensors Networks Smart and Emerging Technologies (SENSET)
13. Yang xu, Fugui Liu, "Application of wireless sensor network in water quality monitoring", 2017 IEEE International Conference on Computational Science and Engineering (CSE) and IEEE International Conference on Embedded and Ubiquitous Computing (EUC)

AUTHORS PROFILE

Minu.M.S currently working as an Assistant professor in the department of Computer Science and Engineering at SRM Institute of Science and Technology. She has completed her B.E from St. Xaviers Catholic College of Engineering in Kanyakumari district and completed her M.E from Annamalai University,Chidambaram and she is currently pursuing her Ph.D from Sathyabama Institute of Science and Technology, Chennai.She had published many papers, some of them are "Smart Shopping System,With Automatic Bill Customer Relationship Management" , "Real Time College Bus Monitoring and notification System", "Online Canteen System", "Flight delay prediction using Binary Classification". Some of her scopus publications are "Prevention of Hacking in Vanets using Network Security", "Data Analyzer Using the Concept of Machine Learning", "Enhanced Image Capturing using CNN", "Cervical Cancer Prediction using Naïve Bayes Classification" and "Improved Image Captioning Using Associative Correlation". Her achievements are, she has Participated and won second prize in Treasure Hunt at National Level Technical Symposium conducted by Cape Institute of Technology, Anna University, Tirunelveli. Participated and won first prize in Brain Shoot at National Level Technical Symposium conducted by Cape Institute of Technology, Anna University, Tirunelveli. CSI Coordinator for Tech Talk event for CSI (Computer Society of India) conducted on 21 March 2018 at SRMIST Ramapuram, Chennai. Programme Coordinator for CoDigo event & cultural's conducted in Mar 2018, National Level Tech Fest TeXuS 2K18 organized by the Department of Computer Science and Engineering, SRM Institute of Science and Technology, Ramapuram, Chennai.Automation of MIS worksheet using Google Forms has been recognized as 'Best Kaizen 2018' by HOD, Dept. of CSE & VP, SRM IST, Ramapuram, Chennai.

Priyanka Kumari currently studying computer science in SRM Institute of Science and Technology, Ramapuram located in Chennai, currently pursuing his technical degree. She did her both HSC and SSC from Chinmaya Vidyalaya which is located in Bokaro Steel City,Jharkhand..She has completed her industrial training from SAIL,Bokaro Steel Plant.She has also completed her formal internship from Consurgen,Hyderabad.

Aniket Kumar Singh currently studying computer science in SRM Institute of Science and Technology, Ramapuram located in Chennai, currently pursuing his technical degree. He did his SSC from Army Public School, Kirkee which is located in Pune and his HSC from Bharathi Videyapeeth Senior and Secondary highschool which is also located in Pune.

Avinash Singh is currently in his third year of BTech Computer Science Engineering in SRM IST. Avinash has excellent communication skills, enabling him to effectively communicate with a wide range of people. He is very well versed with the fundamental teachings in the field of Computers and is efficient in various programming languages. With his technical and non technical knowledge, Avinash has contributed in many events as both participant as well as a part of the organising committee., Avinash proves to be highly coherent in terms of being focused towards his coming days in the technological industry.