International Journal of Recent Technology and Engineering (IJRTE)
ISSN: 2277-3878, Volume-8 Issue-3, September 2019

Temporal and Spatial Fluctuation of Noise Levels in the Closed Vicinity of Urban Roadways

Pervez Alam, Kafeel Ahmad and Nasim Akhtar

Abstract : ***Noise pollution is a very critical issue for a better quality of life in urban settings. This study has been conducted to investigate the temporal and spatial fluctuation of noise levels in the vicinity of urban roadways. A total of twelve sites have been covered, eight in residential area and four in commercial area for this study. The monitoring of noise levels in residential and commercial areas in the capital city of India, Delhi, has been carried out from 18th of July to 12th of August 2017 using Sound Level Meter (Larson & Davis 831). The monitoring has been done only on working days and in good weather condition as per standard procedure, special care has been taken to reduce the effects of wind. Temporal distribution shows that the noise level in morning at the residential area has been more than the prescribed standard and reached up to 84.8 dB (A) in comparison to the commercial areas which has been remains up to 79.46 dB (A). Spatial distribution revealed that the noise level at Ashram Chowk remains in the range of 75 to 80 dB (A) which is maximum in comparison to all other selected location of residential area followed by Moolchand which remains in the range of 70 to 75 dB (A). In commercial area the noise levels remain in the range of 65 to 70 dB (A) at Connaught Place outer Circle (CPOC), which is remain maximum among all selected location. The noise level exceeds the recommendation of CPCB at all eight locations of residential area and two locations of commercial area out of four. It can be concluded that the residential area near urban roadways remains more prone to noise pollution in comparison to commercial area. Planning and public knowledge about the long term noise risk may help in to relieve the noise risk in urban areas.***

Keywords: Noise Levels, residential area, commercial area, urban roads, Spatial Distribution.

I. INTRODUCTION

The sources of noise pollution in Delhi City include stationary (loudspeakers, industries and factories) and non-stationary (road traffic, air traffic and crowds on the passageways) are amongst the main anthropogenic sources of noise in Delhi. The expanding concern of researchers and designers for noise pollution for urban areas is obvious from the substantial numbers of studies which have been done amid most recent couple of decades [1-3]. The noise related problem is mainly associated with the urban areas in comparison to rural due to high density of traffic.

Manuscript published on 30 September 2019
* Correspondence Author
Pervez Alam, Department of Civil Engineering, Jamia Millia Islamia, New Delhi, India. Email: pervezjmi@gmail.com
Kafeel Ahmad, Department of Civil Engineering, Jamia Millia Islamia, New Delhi, India. kafeeljmi@gmail.com
Nasim Akhtar, Central Road Research Institute, Mathura Road, New Delhi, India. Email: akhter.crri@gmail.com

Since vehicular traffic is major source of noise, it is not surprising that most of the previous researches have been carried out on road traffic noise [4-6]. Singh and Jain (1992) [7] have observed maximum noise levels in commercial areas followed by industrial and residential areas of Delhi. Commercial and industrial activities are also responsible for the urban noise pollution in Delhi but up to very fewer levels. In India,the comparative study of noise monitoring in residential and commercial areas is confined to few cities like Delhi, Mumbai, Gorakhpur and Nashik [8-10]. One of the such study has been conducted by Maraleet. et. al., [11] for the comparative analysis of noise pollution in pilgrimage places of Maharashtra. They have examined the noise pollution both in terms of the scientific and volumetric and establish relation between visitor volume and noise pollution. In another comparative study of noise pollution for some cities of India done by Ghosh et. al., [12] compared vehicular and railway traffic noise and their impact on human health. Khan et. al., [13] have conducted their study for road traffic noise at New Delhi and found that the industrial area has been more prone to noise pollution in comparison to silent area. Some spatial and temporal studies also have been conducted in developing countries like Nigeria, Pakistan, Iran etc. One such study has been conducted at Nigeria by Baloye and Palamuleni [14] they have establish around eight hundred noise monitoring stations, taken at 20 different places in the morning, afternoon, and evening of sensibly selected weekdays, in each urban area, were used for this study. Study shows that average noise levels in the urban hubs at between 53 dB(A) and 89 dB (A). In another study at Pakinstan by Farid et. al., [15] have conducted the noise monitoring studies at various location of Residential, Commercial and Industrial area of and reported that the maximum noise level in industrial zone. Pinto and Mardones [16] have conducted their study at Copacabana, Rio de Janeiro Brazil and have reported that the simulation of noise pollution can be done by mapping. In another study done by Mehdi et. al., [17] in Pakistan they have reported that the maximum noise level in Pakistan was over 101dB that is nearly equal to the noise level which may affect the hearing potential. The literature review shows that temporal and spatial distribution of noise level has not been addressed so far in India. Therefore, the objective of current study is to investigate the temporal and spatial fluctuation of noise levels in the closed vicinity of urban roadways.

II. Materials and Method

A. Description of the Study Area

Delhi authoritatively known as National Capital Territory of Delhi (NCT), is a union territory and city of India containing New Delhi, the capital of India.

It is the City has proper's population of over 11 million, the second-highest population in India after Mumbai, while the whole NCT's population has been about 16.8 million. Total number of registered vehicles in Delhi is around 1, 05,000 i.e., second most number of vehicles in India [18]. In recent years many corporate office has been established in Delhi that attracts job seekers from rural area to migrate due to which population load has been increasing drastically. Delhi is also international trade centre of India, Railways and roads have been developed to connect all cities [19]. Fig.1 shows the geographical location of Delhi and study areas. Ashram, Nizamuddin and Lajpat Nagar-II are selected as residential area in Delhi while Connaught Place Inner, outer, middle circle and Lajpat Nagar Central Market are selected as commercial area for the study. Residential areas are situated in south Delhi though Connaught Place commercial area located in New Delhi. These locations have been selected on the basis of population density and traffic volume that has been discussed in the subsequent section.

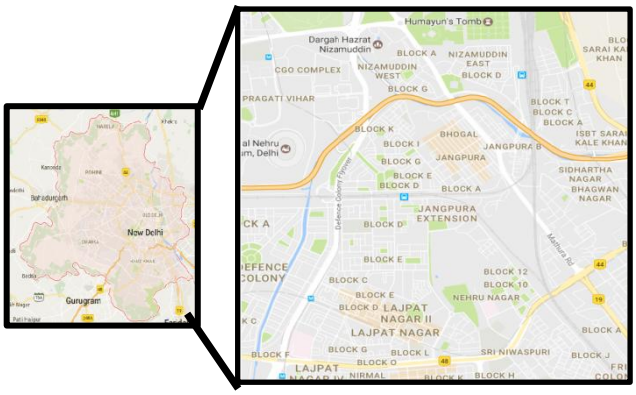

Fig.1. Geographical location of New Delhi, India and major road of study area

Eighteen temporary noise monitoring stations, Noise monitoring (NM) 1 to NM 18 shown in Fig.2 have been established for 24 hr noise monitoring in residential area and Twenty-six monitoring station have been established in commercial area for the study. The noise monitoring stations have been established on each junction where traffic merges or diverted or where flow of traffic changes.

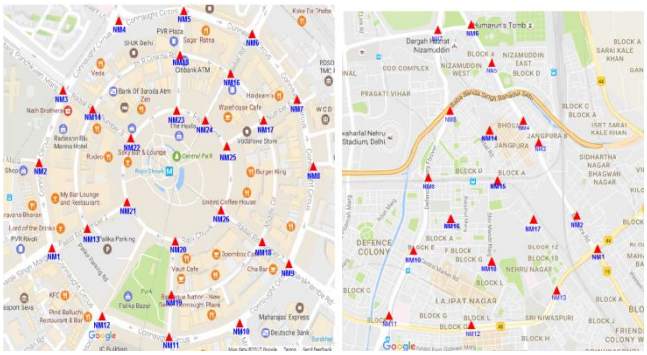

Fig.2. Spatial distribution of noise monitoring station in residential and commercial area.

B. Traffic volume

Developed countries like European nations, United States, Australia and Japan have design their own noise propagation models for 2D and 3D noise mapping that helps to show the spatial distribution of noise levels. However, Indian doesn't have such model for 2D and 3D noise mapping. Therefore, traffic volume in PCUs has been determined for the validation of spatial distribution results. The PCU has been calculate using equation.

$$PCU = \frac{Kc/W_l}{Kt/W_l}$$

Where, Kc is the density of car, W_l is the width of lane and K_t denoted as the density of truck. The traffic volume in PCUs at the junction of monitoring site at residential area in morning and evening peak hours is shown in Fig. 3. In morning the peak hour flow has been maximum towards Lajpat Nagar followed by Maharani Bagh and minimum towards Nizamuddin. The flow of traffic has been reversed in evening and maximum flow has been registered towards Maharani Bagh as expected due to reverse flow of traffic in evening time i.e., 16999 PCUs.

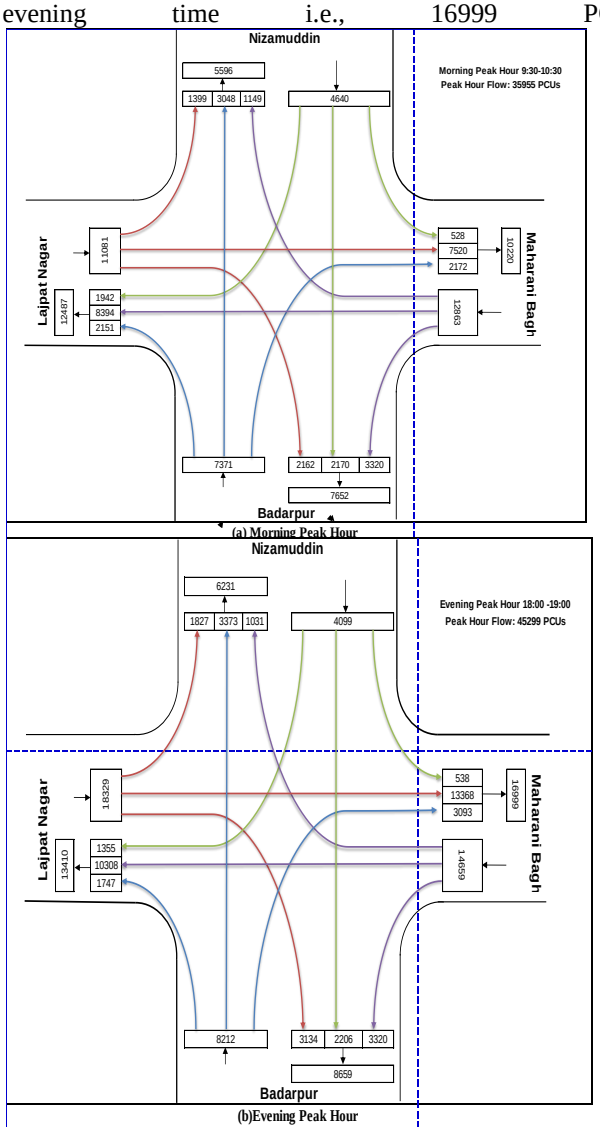

Fig. 3 Peak hour traffic flow in morning, afternoon and evening in terms of PCUs at residential area

As shown in fig. 4 in the commercial area the maximum traffic volume has been observed towards Connaught Place and minimum towards Janpath in morning peak hour. The traffic volume remains almost same in evening peak hour also but the flow remains maximum towards India Gate followed by Connaught Place. The minimum traffic volume remains towards Janpath in evening peak hours same as in morning.

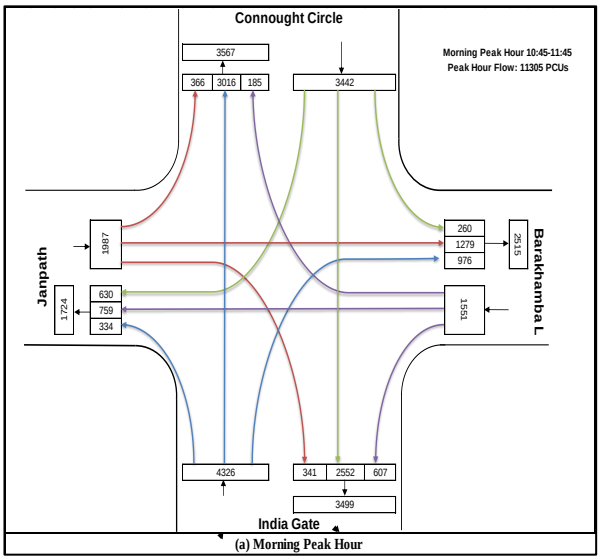

(a) Morning Peak Hour

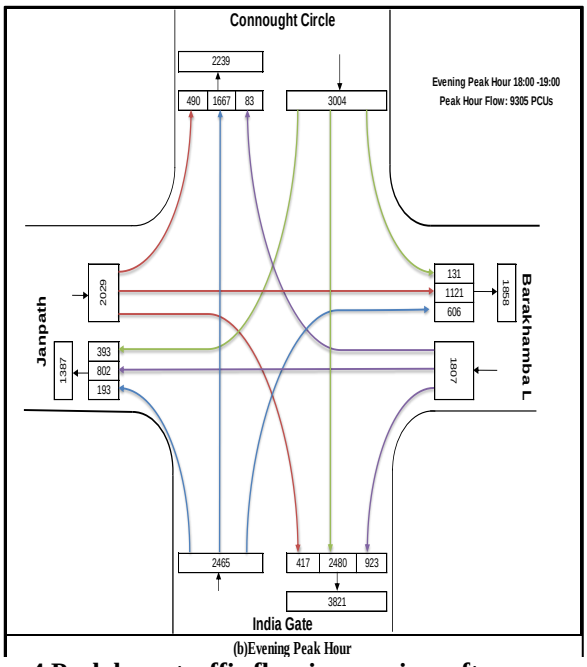

(b)Evening Peak Hour

Fig. 4 Peak hour traffic flow in morning, afternoon and evening in terms of PCUs at commercial area.

C. Noise monitoring instrumentation

The noise monitoring has been done as per standard procedure prescribed by CPCB, 2005 [20] and the same has been recommended by and recommended by ISO 1996 part 1 and part 2[21]. Sound Level Meter (Larson & Davis 831) has been used for noise monitoring. The Larson Davis Model 831 is a fifth generation Larson Davis sound level meter, use for simple single handed operation; it is fully featured, elegant and versatile with an ever expanding firmware platform. It allows for annotative noise measurements with a voice memo via a headset plugged into the AC/DC output jack or directly through the condenser microphone.

2.3 Monitoring Procedure

Noise monitoring has been on working days and in peak hours only. Special care has been taken to reduce the effects of wind and rain. Two Sound Level meters on both side of the road has been used to coup up the traffic variation in day and night time. Hourly average noise monitoring has been done from 18th of July to 12th of August 2017, excluding Saturday, Sundays and holydays. Total twelve areas have been covered, eight in residential area and four in commercial area for the present study as listed in table. 1.

Table. I: List of study area with code

S.No	Sites	Codes
	Residential	
1.	Ashram Chowk	**AC**
2.	Jangpura	**JAN**
3.	Bhogal	**BHO**
4.	Nizammuddin	**NIZ**
5.	Lalalajpat Rai Road	**LRR**
6.	Defence Colony Flyover	**DCF**
7.	Lajpat Nagar II	**LN**
8.	Moolchand Flyover	**MF**
	Commercial	
9.	Connaught Place Inner Circle	**CPIC**
10.	Connaught Place outer Circle	**CPOC**
11.	Connaught Place middle Circle	**CPMC**
12.	Lajpat Nagar Central Market	**LNCM**

Following procedure has been used during noise monitoring.

- Microphone with tripod has been used for noise monitoring.
- Time, date and whether condition has been monitored continuously.
- Before and after noise monitoring the instrument has been calibrated using Larson Davis CAL200 Sound Level Calibrator.
- The monitoring has been done only in good weather condition.

The vehicles have been monitored in 10 seconds period and divided into two wheelers, three wheelers, Light motor vehicles and heavy motor vehicles.

III. RESULTS AND DISCUSSION

A. Temporal distribution of noise level

Figure.5 shows the temporal distribution of noise level in terms of Leq value for residential area at different site selected for monitoring in day time from 6 AM to 10PM and in night time from 10 PM to 6AM. The result revealed that the maximum noise level has been found at Moolchand flyover (MF) i.e.,84.8 dB(A) in day time at 9AM followed by 84.4 dB(A) at Nizamuddin (NIZ) in evening time at 9PM. The maximum noise level in these areas may be due to the heavy traffic flow in peak hours. The minimum noise level has been found at Bhogal 57.4 dB (A) at 2AM followed by 59.3 dB (A) at Defense colony at 6 AM. The noise exposer levels indicate that the selected area has been continuously facing traffic noise that could cause serious health problems. The noise level has also been compared with the prescribed standard (PS) for day and night time that clearly shows that the noise level in and as well in night time always remains more than the PS.

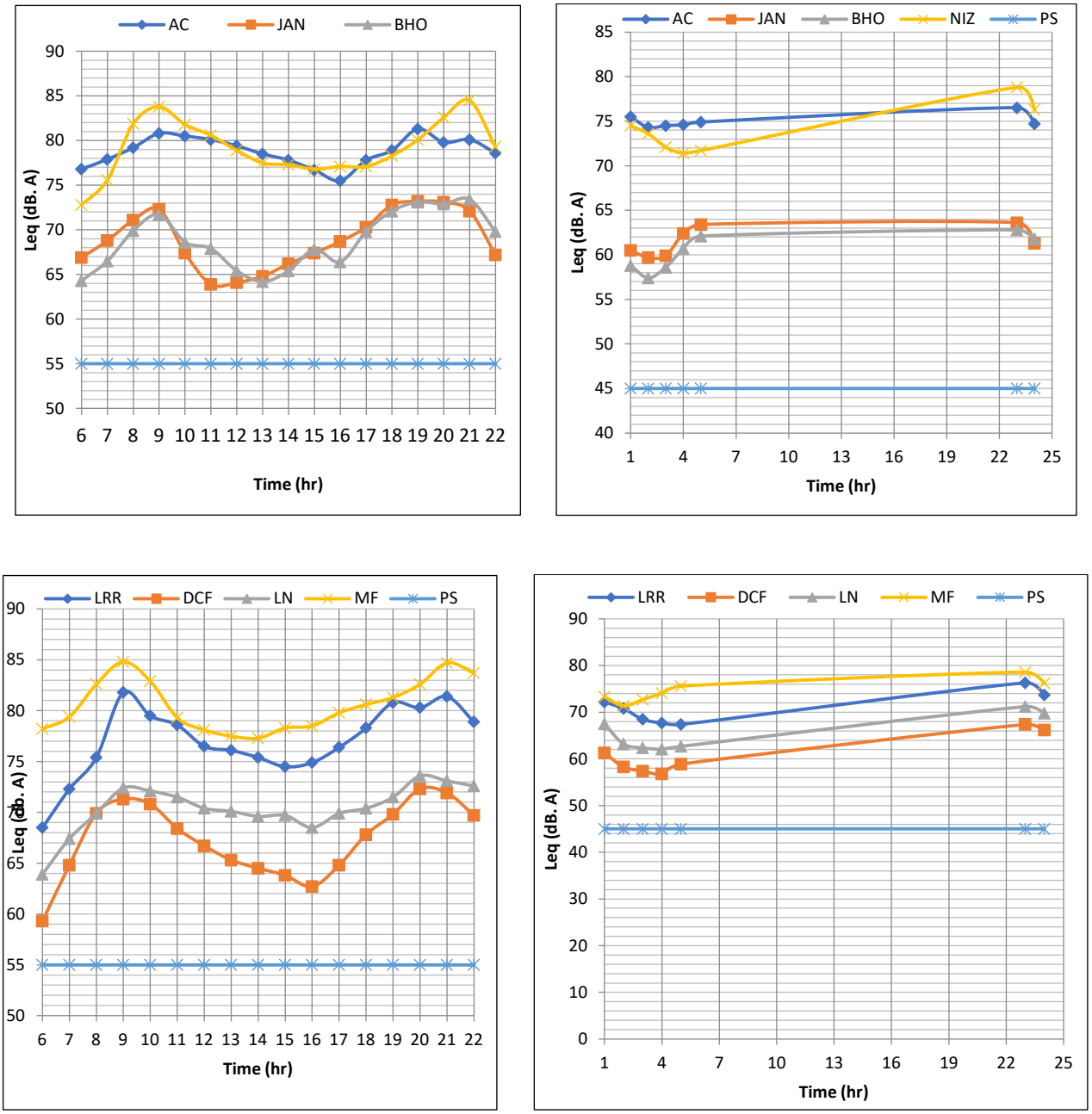

Fig.5 Temporal distribution of noise level a residential area in day and night time

Noise monitoring of residential area also reveals that the minimum noise level at all monitoring stations have been found in afternoon followed by morning and maximum remains in night. This happens because the maximum traffic volume remains in night in comparison to afternoon and morning. As per Suárez and Barros [22] the noise levels for the city of Santiago were high in a in night time in comparison to day time because of high traffic volume.

Temporal distribution of noise levels in commercial area shows maximum noise level of 75.6 dB(A), 8 PM in evening at Connaught Place outer circle followed by 77.5 dB (A) at Lajpat Nagar Central Market. This is because of the fact that most of the people in Delhi go for marketing or outing after office hours i.e., 6 PM. However, noise level at Connaught Place middle and inner circle always remains within prescribed standard of CPCB. As shown in Figure.6 the minimum noise level 30.1 dB (A) has been found at Connaught Place inner Circle in commercial area. The compression of noise level at commercial area with regulatory standards reveals that the noise level at Connaught Place Outer Circle has been continuously more than the prescribed standard in morning as well as in evening. The noise level at Lajpat Nagar Central Market has been more than the prescribed standards in evening time only and in day time it remains within limits because in India market opens after 11AM and peak time for the marketing always remains in evening. Noise level at Connaught Place Middle and Inner Circle always remains within prescribed standards of CPCB i.e., 65dB (A) in day time and 55 dB(A) in night time.

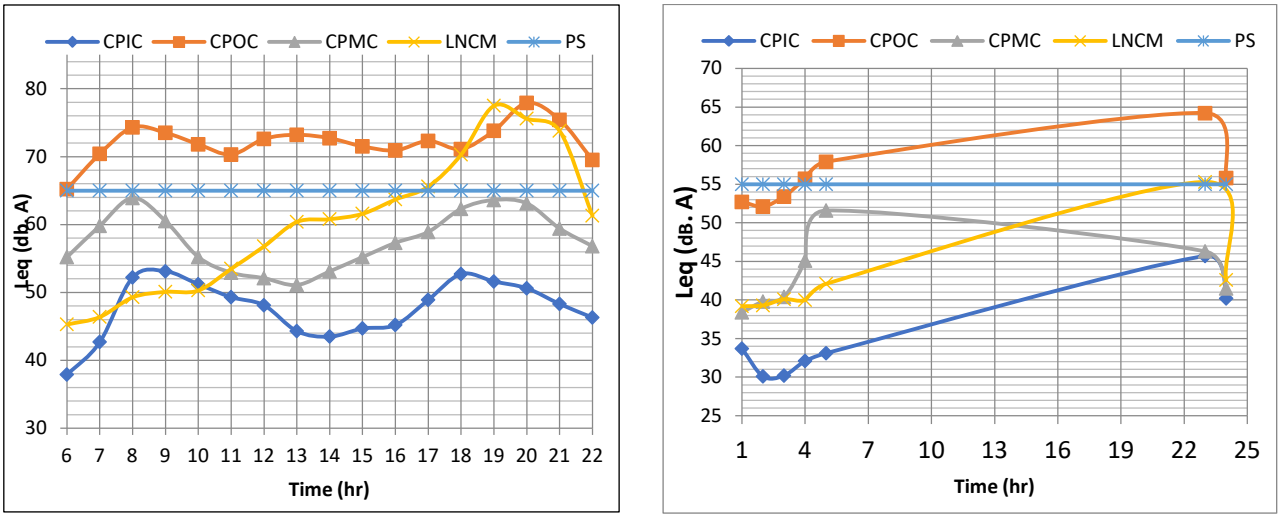

Fig.6 Temporal distribution of noise level at residential area in day and night time.

Table.2 shows the L_{eq} average of noise levels in residential and commercial area in day and night time. Results clearly indicate that the road passing through the densely populated residential area has been more exposed to noise pollution in comparison to commercial area. In morning the residential area has been exposed to a noise level of 79.46 dB (A) in comparison to the commercial area which has been exposed to a noise level of 67.70 dB (A). The difference between Leq noise level in evening remains 11.76 dB (A). In general, the road passing through the densely populated residential area has been exposed to excessive noise in comparison to commercial area.

Table. II: Average of noise levels in residential and commercial area in day and night time

S.No	Type of area	L_{eq}(A) Average Noise Level and Prescribed Standards		
		Day dB (A)	CPCB Stn. dB(A)	Night dB (A)
1.	Residential	79.46	55.0	67.70
2.	Commercial	59.40	65.0	44.23

B. Spatial Distribution of Noise

Spatial distribution of noise levels in residential area has been shown in figure.7 and fig.8. It reveals that the noise level at Ashram chowk has been remain in the range of 75 to 80 dB (A) in peak hours, which is around 20dB (A) more than the prescribed standard of CPCB. At Bhogal and Nizamuddin the noise level remains in the range of 60 to 65 dB (A) and 65 to 70 dB (A) respectively. The noise level at Bhogal, Nizamuddin and Jangpura always remains less than the Ashram chowk in peak hours but always remains more than the prescribed standard of CPCB i.e., 55 dB (A) in day time and 45 dB (A) in night time. The noise level at AC remains maximum at the centre of the road and decreases both side with distance.

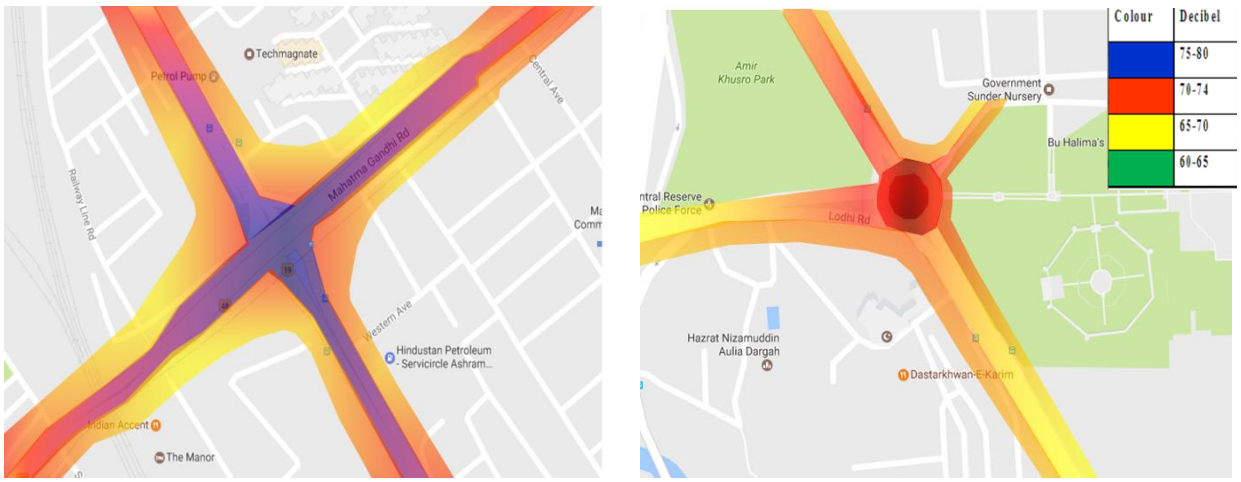

Fig.7. Spatial distribution of noise level at AC, JAN, BHO and NIZ in peak hour.

Noise level at LRR and DC remains in the range of 70 to 75 dB (A) in peak hours. At Lajpat Nagar-II and Moolchand the noise level remains more than the Lala Lajpat rai and remains in between 70 to 75 dB (A). So, the noise levels at all pre selected residential areas remains more than the prescribed standard of CPCB. This may cause discomfort for the people residing near to these selected location.

Remedial measures must be taken to reduce the noise level up to prescribed standard at LRR and DC.

Fig.8. Spatial distribution of noise level at in LRR, DCF, LN and MF in peak hour.

The spatial distribution of pre selected location of commercial area shown in fig.9. It reveals that the noise levels remain in the range of 65 to 70 dB(A) at Connaught Place outer Circle (CPOC), which is remain maximum among all selected location of commercial area. Noise level at Connaught Place Inner Circle remains minimum and remains in the range of 45 – 50 dB (A) in peak hours which is less than the prescribed standard of CPCB i.e., 55 dB (A) in Nigh time and 65 dB (A) in day time.

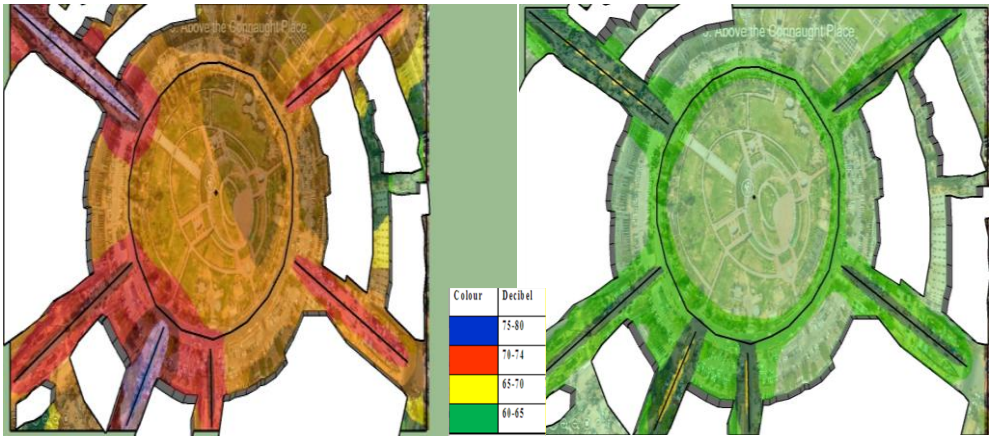

Fig.8 Spatial distribution of noise level at commercial area in day and night time

IV. CONCLUSIONS

In this study noise monitoring of eighteen selected location of residential area and twenty four location of commercial area has been carried out. Based on the monitoring results spatial and temporal distribution of noise levels have been prepared for the selected densely populated roads of residential and commercial area of New Delhi. The temporal distribution of noise level observed that the noise levels in morning at the residential area has been more than the prescribed standard and reached up to 84.8 dB (A) in comparison to the commercial areas which has been remains up to 79.46 dB (A). This because of the fact that
the traffic volume remains maximum at the densely populated urban roads passing through residential area in comparison to the road passing through the commercial area. Spatial distribution of noise level has also been developed. It gives clear picture of noise propagation from the center line of road that may be very helpful for the decision makers in taking remedial majors. Hence it has been concluded that the noise level is a very serious problem in residential area of Delhi in comparison to commercial area and care for noise reduction must be developed in residential area.

REFERENCES

1. Rathe, E. J.: 1966, 'On the Noise from Street Traffic', Acoustica 17, 268-277.
2. Jones, R. R. K. and Hothersall, D. C.: 1980, 'Effect of Operation Parameters on Noise Emission fromIndividual Road Vehicles', Applied Acoustics 13, 121-136.
3. Nasim Akhtar, Kafeel Ahmad and Pervez Alam(2016); Noise Monitoring and Mapping for Some Pre-selected Locations of New Delhi, India; Fluctuation and Noise Letters Vol. 15, No. 02, 1650019.
4. A.I.El-Sharkawy, A.A.Aboukhashaba;
5. Traffic noise measurement and analysis in Jeddah;Applied Acoustics; Volume 16, Issue 1, January 1983, Pages 41-49
6. D.Ouis;Annoyance from Road Traffic Noise: A Review; Journal of Environmental PsychologyVolume 21, Issue 1, March 2001, Pages 101-120.
7. Anwar Ali khan, Humaira Ghulshan Lone and Pervez Alam; Study and Assessment of Road

Traffic Noise atSome Selected Locations of New Delhi India; IJIRST; Volume 3 | Issue 10 | March 2017, ISSN (online): 2349-6010.

8. Braj B. Singh And V. K. Jain; A Comparative Study of Noise Levels in Some Residential, Industrial and Commercial Areas of Delhi; Environmental Monitoring And Assessment 35:1-11, 1995.
9. Braj B. Singh and V. K. Jain; A comparative study of noise levels in some residential, industrial and commercial areas of Delhi; Environmental Monitoring and AssessmentMarch 1995, Volume 35, Issue 1, pp 1–11.
10. Pawan Kumar Singh, Rohit Kumar Gupta, Vijay Kumar Mishra and Dr. A. K. Mishra; A Comparative Study of Ambient Noise Levels At Commercial,Residential And Silent Zone In Gorakhpur; IRJET; Vol.3, 2016.
11. Pushkar S Kothawade, Mrs. Madhura Aher; Comparative Study of Successive Factors of Residential and Commercial Project in Nashik; IJARIIT; Volume-2, Issue-6, 2016.
12. Sanjay Marale, D.M. Mahajan, Ravindra Gavali and Yogesh Lolage; Comparative Analysis of Noise Pollution in PilgrimagePlaces from Maharashtra, India; EnrichEnvironment; Iss. 11, Vol. 4, Aug. 2011.
13. Dr. Manoj Kumar Ghosh, Mrs. Aakankshalall , Dr. Sanjay Ghosh; A Comparative Study of Noise Pollution in SomeCities of India; 2nd International Seminar On "Utilization of Non-Conventional Energy Sources for Sustainable Development of Rural AreasvISNCESR'16, 17th & 18th March 2016.
14. Anwar Ali Khan, Humaira Gulshan Lone and Pervez Alam, Study and Assessment of Road Traffic Noise at Some Selected Locations of New Delhi India, International Journal for Innovative Research in Science & Technology| Volume 3 | Issue 10 | March 2017
15. David O. Baloye and Lobina G. Palamuleni; A Comparative Land Use-Based Analysis of Noise Pollution Levels in Selected Urban Centers of Nigeria; Int. J. Environ. Res. Public Health 2015, 12, 12225-12246.
16. Mujahid Farid, Shafaqat Ali1, Muhammad Bilal Shakoor,Ahmad Azam, Sana Ehsan, Hafiz Muhammad Tauqeer,Usman Iftikhar; Comparative Study of Noise Levels in Various Areas of Faisalabad, Pakistan; Greener Journal of Environmental Management and Public Safety;Vol. 2 (4), pp. 166-171, August 2013.
17. Fernando Augusto de Noronha Castro Pinto ·Maysa Daniela Moreno Mardones; Noise mapping of densely populated neighborhoods—example of Copacabana, Rio de Janeiro—Brazil; Environ Monit Assess (2009) 155:309–318.
18. Mohammed Raza Mehdi, Minho Kim, Jeong Chang Seong , Mudassar Hassan Arsalan; Spatio-temporal patterns of road traffic noise pollution in Karachi, Pakistan; Environment International 37 (2011) 97–104.
19. "Census 2011 (Final Data) – Demographic details, Literate Population (Total, Rural & Urban)" (PDF). *Planningcommission.gov.in*. Planning Commission, Government of India. Retrieved 3 October 2018.
20. "Regional Plan 2021, Chapter 4, Demographic Profile and Settlement Pattern" (PDF). NCR Planning Board. p. 28. Archived (PDF) from the original on 20 March 2017. Retrieved 19 March 2017.
21. Protocol for ambient level noise monitoring, Central Pollution control board Delhi, 2005, Jul; 1-6.
22. ISO 1996-I: Acoustic description and measurement of environment noise Part-1: Basic quantities and procedure, 2016
23. E. Suárez and J.L. Barros, Traffic noise mapping of the city of Santiago de Chile, Science of the Total Environment 466–467 (2014) 539–546.

AUTHORS PROFILE

Pervez Alam is presently persuing PhD from Department of Civil Engineering, Jamia Millia Islamia. He graduated in Civil engineering from JMI and Post Graduated in Environmental Engineering from Aligarh Muslim University, Aligarh, India. He has published 13 papers in national /international journals and conferences. He has 70 citation of his research work with 3 H index. He has supervised 30 B- Tech project. He is the life member of Acoustical Society of India and Institute of Urban Transport, New Delhi. Alam is Casual Reviewer of 03 reputed international journals of environmental science and engineering.

Kafeel Ahmad is presently, Professor in the Department of Civil Engineering and Hony. Director (Research), Jamia Millia Islamia. He is Fellow of Institution of Engineers (FIE), India and Chartered Engineer (CE) India. He is graduated in Civil Engineering and post graduated in Environmental and Water Resources Engineering from Aligarh Muslim University, Aligarh. He obtained his Ph.D. (Environmental Engineering) degree from Indian Institute of Technology, Delhi. Dr. Ahmad has 19 years research and teaching experience. He has supervised seven PhD thesis and 27 M. Tech dissertations. He has published 92 papers in national /international journals and conferences. He has 1421 citations of his research work with H-index 11. Dr. Ahmad is Casual Reviewer of more than 25 reputed international journals of environmental science and engineering. He has also specially designed and authored a book on environmental science and engineering for competitive examinations.

Nasim Akhter is presently, principal scientist and Asso. Professor in transport and planning division, CSIR-Central Road Research Institute, Mathura Road, New Delhi –110025. He is graduated in Civil Engineering and post graduated in Environmental and Water Resources Engineering from Jamia Millia Islamia. Dr. Akhter has 15 year of research experience. He has published 30 research paper in national /international journals and conferences. He has 80 citation of his research work with 5 H index. He is member of Society of Low Frequency Noise Contro, Acoustic Society of America (ASA), The Scientific Journal Club, Acoustic Society of Netherland.