International Journal of Recent Technology and Engineering (IJRTE)
ISSN: 2277-3878, Volume-8 Issue-3, September 2019

Method for Saving Domestic Electrical Power

Reeta Pawar, Ravitesh Mishra, Jitendra Ahir

Abstract: ***The electrical power consumption in the domestic areas and homes are very large as compared to the urban areas, the domestic purpose is significantly increased to a great extent. Since people forgets to switch OFF the electrical appliances connected to the home electrical power supply, the electricity bill comes with high charges, as the person in the house forgets to switch OFF the electrical appliance. This paper presents a system for automatically switch ON/OFF the electrical appliance upon the presence of a person inside the room, the system will count the number of person enters/exits from the room and then accordingly switches ON/OFF the electrical appliances. This system is affordable and can be used by everyone for saving huge amount of electricity bill by saving electrical energy when no one is present in the room.***

Keyword: Infrared, electromagnetic relay, D-latch, counter

I. INTRODUCTION

The electricity used by the domestic users is increased significantly in the recent decades. The use of lights and fans full day nonstop is now becoming more common nowadays. The main usage of the electricity in some domestic purpose may be consumption of the electrical power due to not powering off the electrical appliances that is connected to the electricity grid system of the house. This paper presents an alternate method for the solution of the problem due to the forgetfulness of the user to switch off the electrical appliances[1]. The alternate method is to count number of people entering and leaving the room to automatically switch off the electrical appliances[2].

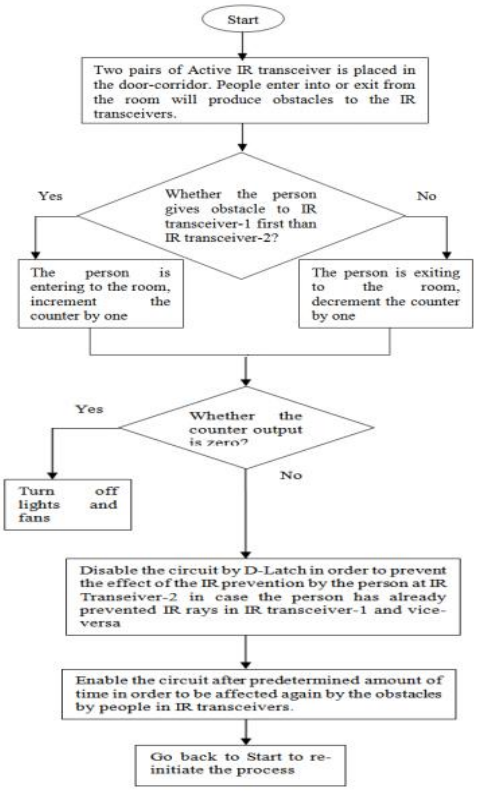

Fig. 1: Flowchart of the proposed algorithm.

A pair of infrared transceiver[3] will act as an sensor that detects entering/exiting of any person in a room that is it will detect the number of people that are present in the room and hence this can be used to automatically turn on/off the connected electrical appliances when there is movement of people in/out of the room and hence will save the domestic electrical power.

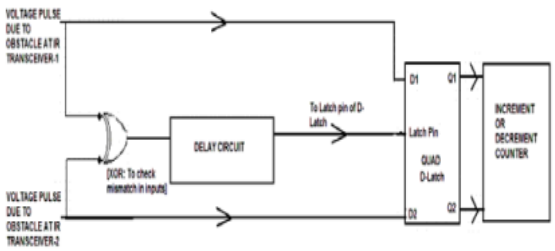

Fig. 2: Block Diagram of the proposed circuit.

Latching of the D-latch IC prevents effects of obstacle to the IR transceiver that is placed far from the door. If any person tries to enter the room, the IC will generate a latching and will count the person entered into the room. In that case the value of the latching IC will be initiated to count down the number of person that are present in the room. The block diagram of the circuit is given below in Fig. 2.

Manuscript published on 30 September 2019
* Correspondence Author
Dr. Reeta Pawar, Department of Electrical & Electronics Engineering, Rabindranath Tagore University, Bhopal
Dr. Ravitesh Mishra, Department of Electronics & Communication Engineering, Rabindranath Tagore University, Bhopal
Jitendra Ahir, Department of Electronics & Communication Engineering, Rabindranath Tagore University, Bhopal

II. DELAY CIRCUIT

The circuit diagram of the delay circuit that is[4] used for delaying the latching is shown in the figure 3.

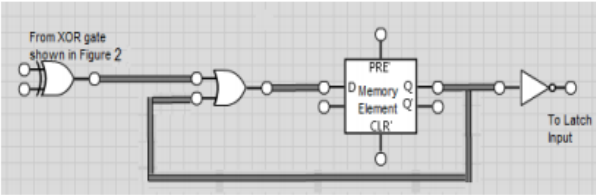

Fig. 3: Circuit Diagram of Delay circuit.

III. QUAD D-LATCH

Table 1: Functionality of Latch Input of D-Latch.

D	Latch Input	Output
0	1	0
1	1	1
X	0	Previous Output

The table 1 displays the function of the latch input of the D-latch, this is clear from the table that the circuit is not affected by the voltage received at the transceiver, the output voltage of the circuit should go through the inverter circuit. After the D-latch latches the output will changed to its previous value and thus generating output. This method will ensure the accurate counting of the user/person entering/exiting from the room[5].

When any person enter/exits the room, the latch become prepare for the new data incoming from the sensor to start counting again. The delay unit ensures that the circuit will be activated for any new entrance/exit of a person to start the counter. As shown in figure 4.

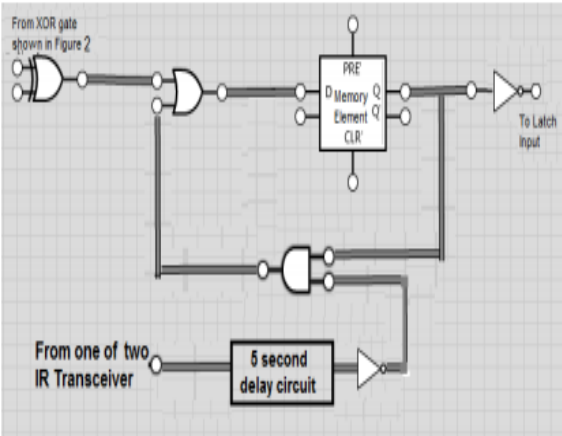

Fig. 4: 5 Second Interval Reactivation Delay Circuit Implementation.

IV. RELAY FOR CONTROLLING APPLIANCES

The relay is used as an electromagnetic switch for switching ON/OFF the electrical appliances connected to the electrical power grid system/network. The delay circuit and the sensor are used for detecting the number of person present in the room, when detecting entering/exiting of any person inside the IR sensor sends a command signal for counting number of people. When there is no person present in the room then the relay will automatically switches off the electrical appliance, but when any person enters the room the IR sensor will the detects the entry of the person and then send command to the relay to automatically switches ON the connected electrical appliance. The electromagnetic relay is shown in the figure 5.

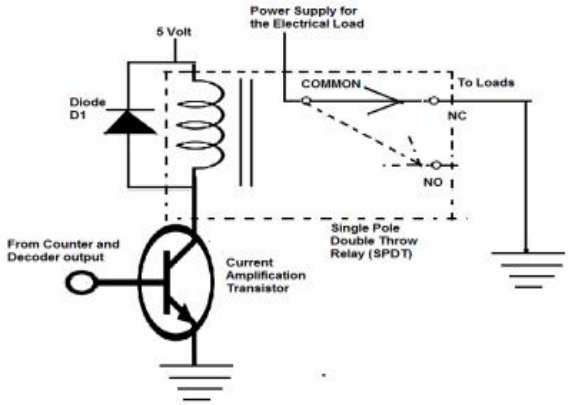

Fig. 5: Electromagnetic SPDT Relay Connection and Suitable Current Amplification.

V. CONCLUSION

This paper suggests a method and a system to decrease the electrical consumption in the domestic areas, the paper presents an affordable system with a circuit and sensor that detects the presence of any human inside a room. When the sensor detects any entry of the person inside the room then it will automatically turns ON the connected electrical appliances and it continues to count the number of people inside the room, if the last person inside the room exits the room then the sensor detects the exit of the last person and then automatically switches OFF all electrical appliances that are connected to the electrical power system.

This system provides electrical energy saving, hence reducing cost for electricity bill simultaneously for the domestic areas.

REFERENCE

1. S. Hidayat and S. F. Firmanda, "Scheduler and voice recognition on home automation control system," in *2015 3rd International Conference on Information and Communication Technology, ICoICT 2015*, 2015.
2. J. H. Su, C. S. Lee, and W. C. Wu, "The design and implementation of a low-cost and programmable home automation module," *IEEE Trans. Consum. Electron.*, 2006.
3. N. Liu, M. Mesch, T. Weiss, M. Hentschel, and H. Giessen, "Infrared perfect absorber and its application as plasmonic sensor," *Nano Lett.*, 2010.
4. D. Jackuline Moni and P. Jisha, "High-speed and low-power dynamic latch comparator," in *2012 International Conference on Devices, Circuits and Systems, ICDCS 2012*, 2012.
5. N. David, A. Chima, A. Ugochukwu, and E. Obinna, "Design of a Home Automation System Using Arduino," *Int. J. Sci. Eng. Res.*, 2015.