International Journal of Recent Technology and Engineering (IJRTE)
ISSN: 2277-3878, Volume-8 Issue-3, September 2019

Adaptive Lightning System for Vehicle Protection

Mihir Narayan Mohanty, Sushanta Kumar Kamilla

Abstract*-- This paper presents an adaptive lightning system for vehicle protection. More specifically the present paper relates to an adaptive lightning system for vehicle protection during night times when the light intensity is too high. It comprises of a photo diode for detecting an incoming high intensity of light of vehicle during night. In most of the cases the night accident is due to the mistake of a driver who uses headlight instead of dippers, when another vehicle is coming from opposite side of road. Due to heavy traffic at night times there is a large number of road accidents because of the intense light of approaching vehicle. Therefore, this paper proposes an automatic controlling of headlights of vehicles by just turning the car steering, during night time and allows the driver to comfortably concentrate on driving.

***Index Terms*—Adaptive lightning system, light intensity, headlight, photo diode.**

I. INTRODUCTION

With the rapid increase in population, the use of automobile has also increased. It is perceived that the rate of road accident during night is much higher than the accidents during day time. The headlights cars buses, trucks etc. are used to give high light intensity to a driver for viewing the road. Many times, due to heavy traffic at night the driver fails to adjust the headlights accordingly. This could lead to a major road accident. .Hence to prevent these road accidents, numerous devices like airbags are installed in the car to provide safety to driver during an accident but there is no such mechanism which provide complete protection to the driver of vehicle before an accident[1],[2].

The primary cause of road accidents is sharp turns and bent roads in mountain or hilly areas. Due to the sudden occurring bends or blind spots the driver is not able to see the nearby objects. There are many reasons for blind spot like sharp curve on road, improper keeping of side mirror etc. Therefore, this blindness must be eliminated for safe driving. The blindness on temporary bases arises due to extreme brightness of headlights. High illumination of light results in case when the light from approaching vehicle falls directly to the eyes of driver of front vehicle. Due to this, the driver is blinded for few minutes and during these minutes these may be an accident[3]. These problems are more predominant when the path is rounded. An automobile with ordinary headlamps transmits the light emissions lateral to the curvature.

Hence the chance of intensive lights coming directly from the opposite side of road is very high and this is the main cause of road accident during night times. The dazzling of headlights can be controlled manually by using the push button which is attach to the steering of the vehicle.
Therefore, this paper proposes a novel mechanism which helps the driver for controlling the dazzling of headlight automatically by just turning the car steering. In past years various techniques were proposed but due to their high cost, inaccuracy, low rate of time response these methods are limited[4],[5].

II. REVIEW OF LITERATURE

Conventionally, various headlights were developed for controlling the dazzling of light or high illumination of headlights. One of the conventional systems that were introduced to eliminate the dazzling of headlamps is the design of advanced Light emitting diode (LED) system and the digital micromirror (DMD) design. This type of advanced LEDs generates a low intensity of light which do not cause a blind spot to the driver. The turning on and off of these LEDs were done by DMD. These have a capability to incident a beam of light in a particular angle and can decide the shape of the beam of the incoming light[5],[6]. Due to these types of light emitting diode the intensity of light decreases which causes visible problem to the driver while watching the road and is not much economical.

III. WORKING OF PROPOSED SYSTEM

The working of an adaptive lightning system depends on following of the components as describe below:

A. Controlling Module-

8051 Microcontroller which consumes low power, highly reliable and have fast time response is used for controlling the illumination of headlight during night times. It is 8-bit microcontroller with a flash memory of 8 kb, 128 kb of RAM and 40 input output ports. The microcontroller is associated with a DC generator for measuring the generated current, a photo diode for measuring the intensity of light and a stepper motor which rotates the headlight accordingly. Fig.1 shows the 8051 microcontroller architecture along with its pin[7].

Manuscript published on 30 September 2019
* Correspondence Author
Mihir Narayan Mohanty*, Dept. of Electronics and Communication Engg, Siksha 'O' Anusandhan Deemed to be University, Odisha, India.
Sushanta Kumar Kamilla, Dept. of Physics, Siksha 'O' Anusandhan Deemed to be University, Odisha, India.

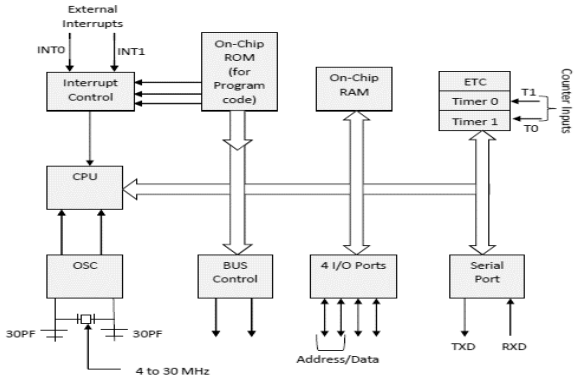

Fig.1. 8051 Microcontroller Architecture

B. DC Generator

DC generator is used to convert mechanical energy into electrical energy by mutual induction. Its working is based on Faraday's law of electromagnetic induction which conclude that in a rotating magnetic field any change in flux will cause the emf. The DC generator is used to produce electricity which is supplied to the headlight for illuminating the road. The DC generator is coupled with a microcontroller for sensing the voltage and current generated by it.

C. Photo diode

A photo diode detects the light and converts the detected light into electrical current[9]. The electrical current is measured by microcontroller. The lightfalls on the optical filters to energise the junction. When there is a light, a current start flowing from negative terminal to positive terminal of the diode.

D. Stepper motor

A stepper motor is used to rotate in steps or stepper motor is defined as " an electromechanical device which converts electrical pulses into discrete mechanical movements"[10].The shaft of stepper motor is rotated in discrete steps and it is connected to headlight. When a microcontroller sends a command to stepper motor for changing the position of headlight it starts rotating shaft in discrete steps thereby rotating headlights accordingly.

The Adaptive lightning system for vehicle protection comprises of a microcontroller for controlling the headlight position, a DC generator for producing a voltage to start headlight, a photo diode for converting the light signal into electrical current and a stepper motor for the purpose of rotating the headlight at different angle.

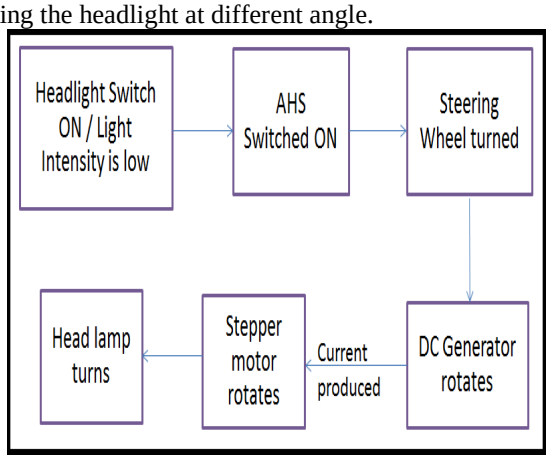

Fig.2 Block Diagram of Adaptive Lightning System for Vehicle Protection

When a person is driving a vehicle at night times, the headlight is switched ON with low light intensity. At the point of steep curve where the visibility is almost zero the steering wheel is turned. The DC generator will generate an output current by developing an emf in the stator terminal and the output power will be supplied to the stepper motor for providing a rotation to the stepper motor in discrete steps. The stepper motor is attached to the headlight for rotating the headlight of stepper motor. The flow chat of Adaptive Lightning System for Vehicle Protection has been shown in block diagram in Fig 2.

IV. RESULTS AND DISCUSSION

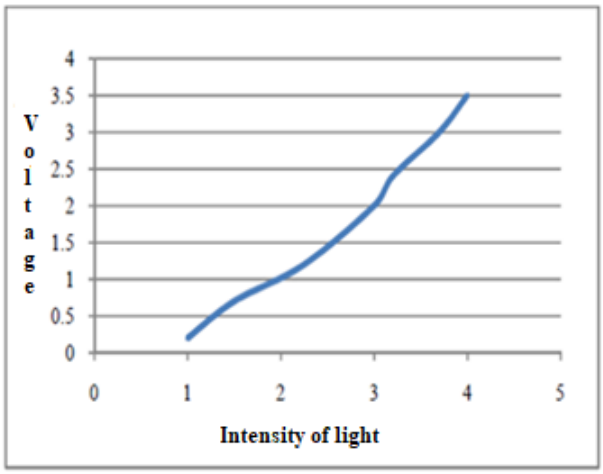

Figure.3. Relation between intensity of light and generated voltage

Fig.2 refers to the waveform of voltage generated according to the intensity of light. From the above figure it is clear that the generated voltage varies linearly the intensity of light. The results are obtained by using MATLAB Simulink.

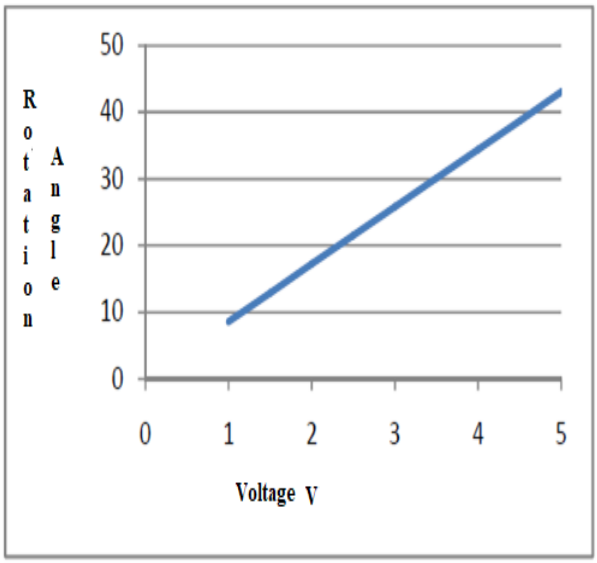

Figure.3. Relation between Voltage and angle of rotation of stepper motor.

Fig.3 refers to the voltage given to stepper motor and the rotation of motion of stepper motor in discrete steps. Thus, from above figures it is clear that the applied voltage and generated voltage varies linearly with respect to the rotation of stepper motor and intensity of light. The stepper motor input voltage is first given to microcontroller and the microcontroller sends the instruction back to stepper motor to rotate the position of headlights accordingly.

V. CONCLUSION

The adaptive lightning system for vehicle protection is a most economical and reliable system for providing protection from road accident during night. It includes a stepper motor-based headlight rotation mechanism for rotating the headlight in a particular direction during night. There are two stepper motor connected to both the headlights of the vehicles and the input voltage of stepper motor are supplied to a microcontroller so that when a photo diode detects the light of upcoming vehicle from the opposite direction of road it sends the signal to the stepper motor to rotate the position of both the headlights. Thus, avoiding accidents during night.

REFERENCES

1. P. Konstantopoulos, P. Chapman, and D. Crundall, "Driver's visual attention as a function of driving experience and visibility. Using a driving simulator to explore drivers' eye movements in day, night and rain driving," Accid. Anal. Prev., 2010.
2. M. Gould, D. R. Poulter, S. Helman, and J. P. Wann, "Judgments of approach speed for motorcycles across different lighting levels and the effect of an improved tri-headlight configuration," Accid. Anal. Prev., 2012.
3. B. F. Wu, H. Y. Huang, C. J. Chen, Y. H. Chen, C. W. Chang, and Y. L. Chen, "A vision-based blind spot warning system for daytime and nighttime driver assistance," Comput. Electr. Eng., 2013.
4. V. Milanes, S. E. Shladover, J. Spring, C. Nowakowski, H. Kawazoe, and M. Nakamura, "Cooperative adaptive cruise control in real traffic situations," IEEE Trans. Intell. Transp. Syst., 2014.
5. A. D. Hwang and E. Peli, "Development of a headlight glare simulator for a driving simulator," Transp. Res. Part C Emerg. Technol., 2013.
6. C.-C. Hung et al., "Optical design of automotive headlight system incorporating digital micromirror device," Appl. Opt., 2010.
7. W. Durfee, "Arduino Microcontroller Guide," in Arduino Microcontroller Guide, 2011.