International Journal of Recent Technology and Engineering (IJRTE)
ISSN: 2277-3878, Volume-8 Issue-3, September 2019

Optimised Environmental Data Acquitisation Technique for Monitoring Air Quality and Crop Plantation for Developing a Smart City using LoRa Network

Twinkle H. Agrawal, Sunil V. Kuntawar

Abstract: ***Movements in low power and simplicity estimation and correspondence development have gotten a disturbed remote distinguishing and checking applications. Starting at now, there are many battling checks and advances trying to take a hold of WSN, especially the zone of remote identifying and correspondence development. LoRa Network is one of these progressions getting omnipresence in the utilization of Wireless Sensor Networks (WSNs). The limit of LoRa Network to develop correspondence interfaces over long detachments with by and large essential centers; irrelevant establishment, low power requirements and use of license free ISM gatherings give it a broad edge of its adversaries. Notwithstanding the way that a lot of research work has been done about the ampleness of LoRa Network for low power remote sensor frameworks, there are still openings in the expounding on the sensible pieces of structure and execution of such systems. This endeavor revolves around issue of realizing a constrained sensor arrange for a sharp air quality examination and yield domain system for a splendid city application using LoRa Network as the central correspondence development. A structure for checking air nature of the earth and yield bequest is executed using negligible exertion game plans available in the market. This task likewise has application in yield ranch. Soil dampness, temperature, mugginess of the dirt is noted so that if soil's water level goes down or ends up overabundance it will hurt the yields. So to keep up the water prerequisite sensors are set in soil and lora innovation is utilized for information transmission.***

Index Terms**:** ***LoRa Network, Low-Power Networks***

I. INTRODUCTION

As per World Health Organization [WHO] air tainting is infectivity of the indoor or outside condition by any manufactured and normal administrator which changes qualities of the earth. Nuclear family start devices, vehicles and forest blazes are normal base of air sullying and bustle pollution. Pollutions which are accountable for prosperity concern consolidate particulate issue, carbon monoxide, ozone, nitrogen dioxide and sulfur dioxide. Air tainting cause respiratory and various sicknesses, which can be damaging. WHO has assessed nature of air in about 1500 urban territories and Indian capital city was the one of the most dirtied urban zones the world over. Delhi is having most raised gathering of particulate issue which is smaller than 2.5 micrometer . Air pollution and nonattendance of air quality watching centers address regular and imaginative troubles for urban networks and circumstances around the world. To stand up to this issue, industry has focused its undertakings in finding an adaptable mechanical elective that allows the improvement of the air quality evaluating method and gives reference regards in framework goals where customary watching fails to cover appropriately. Appallingly, existing things and the created results don't address ease courses of action. Indian cultivating portion speaks to 18% of India's gross local generation (GDP) and offers work to half of country's workforce. India is second greatest producer of vegetables and natural items on the planet . In India 43% of topographical locale is included by cultivating region . According to conjecture of FAO, one out of nine people far and wide need adequate sustenance expected to keep up a strong and dynamic lifestyle and says that this number is required to augment as masses continues rising. Not simply that, a couple inspects have shown that the enthusiasm for the sustenance will be duplicated by 2050 due to augment in people. It will be furthermore moving errand to fulfill the requirements of masses in perspective on withdrawing water level, changes in climatic changes and contracting number of cultivating fields . The entrenched methods for creating harvests won't help in extending the agrarian yield with all the recently referenced issues. These assurances demands for more research headway in rustic region. As shown by late reports, around 70-80% of agricultural ozone draining substance releases, for instance, nitrous oxide start from use of nitrogen compost. Thusly, one must apply the required proportion of nitrogen composts in the wake of knowing the essential of the yields.

Manuscript published on 30 September 2019
* Correspondence Author
Twinkle H. Agrawal, Department of Electronics and Communication, Ballarpur Institute of Technology Ballarpur, India
Assi. Prof. Sunil V. Kuntawar, Department of Electronics and Communication, Ballarpur Institute of Technology Ballarpur, India

Despite giving water to agribusiness field should be in controlled manner with the objective that it won't wash away the minerals added to soil similarly as cause soil breaking down. All these requires steady checking of the cultivating field similarly as reap advancement. Hence it requires usage of current techniques in plant fields which associates in advancement of gather proficiency with sufficient use of advantages.

II. LITERATURE REVIEW

Objective of this work is to develop air tainting estimation and gauge system for a clever city which stores the data in the cloud. Cloud data is used for data assessment which can be used for taking the decision to constrain sullying and decrease the effect of pollution on condition. Since cutting edge cell phones and compact applications have changed the human life, same work can be joined to flexible applications. In future, various gas sensors for nitrogen dioxide and sulfur dioxide and commotion level watching moreover could be consolidated. Urban air pollution rate has created to exasperating state over the India. By far most of the urban networks are facing issue of poor air quality which fails to satisfy rules of air for good prosperity. It is to make certain imperative to develop an air defilement estimation and desire system for an astute city. This proposed work acquires carbon dioxide and carbon monoxide level discernible all around close by Global Positioning System (GPS) region by using sullying acknowledgment sensor and moves into Azure cloud organizations. Insignificant exertion introduced Beagle bone board nearby gas sensors are used for data verifying. Microsoft's Azure Machine learning organization is used to anticipate the defilement estimations with the help of past data. Dealt with data is gotten and addressed by Power BI contraption. Adjusted gas sensor data is brought from sensors and adequately moved into cloud. Data set away in cloud is utilized by different cloud organizations to make the data critical. Proposed system is executed and accommodating to screen and reduce the pollution in a sharp city by avoiding the sullying cause [1]. Cultivation accept a basic occupation being developed of Indian economy, therefore procedures for improving harvest yield expect a basic employment. The above work urges one to screen the proportion of NPK present in the earth and its soddenness content. Along these lines, above work gives a response for augmentation the yield of harvests using current development of sensors and LoRa. The information obtained from sensors is explored and information regarding proportion of enhancements and water required by yields is given to end customer using email and convenient. The usage of LoRa Techonolgy covers considerable geographical land with low power use. As such, growing the efficiency of movement. This work helps remote seeing of fields to farmers similarly as helps increase in yield. As a noteworthy part of future work robots can be used to cover greater land zone and assemble data from liberal number of center points and move it to cloud for remote watching. Cultivating is the broadest money related part and expect a key occupation in the as a rule budgetary progression of nation. There are various issues related to farmers which constantly hamper the course of our headway. A champion among the best responses for handle these issues is to ask farmers to use present day frameworks as they help in extending cultivating effectiveness and slash down the data cost. This paper proposes, answer for measure minerals present in rustic land, for instance, nitrogen, phosphorous, and potassium similarly as moisture, soil sogginess and temperature using sensors, LoRa and Cloud development. The data gained from the sensors will be accumulated into the cloud database which will be used to offer information to end customer. The strategy uses the mix of LoRa and circulated registering that advances the snappy improvement of plant modernization and recognizes clever response for agribusiness and gainfully fathom the issues related to farmers from a remote zone [2].

We showed a careful report on the believability of the LoRa WAN association for immense city checking applications. Two commonsense framework associations for the Greater London region reliant on the essentials of air quality and blockage checking have been reproduced. The test framework is then used to survey the specific execution of the framework. The results showed the capacity of LoRa WAN as a useful low power long range ICT answer for smart urban networks. We furthermore completed a short money related assessment and made strategies for the arranged LoRa WAN considering particular theory return plans. We envision that LoRa will be an empowering advancement zone for sharp urban networks for quite a while to come [3].

III. PROPOSED WORK

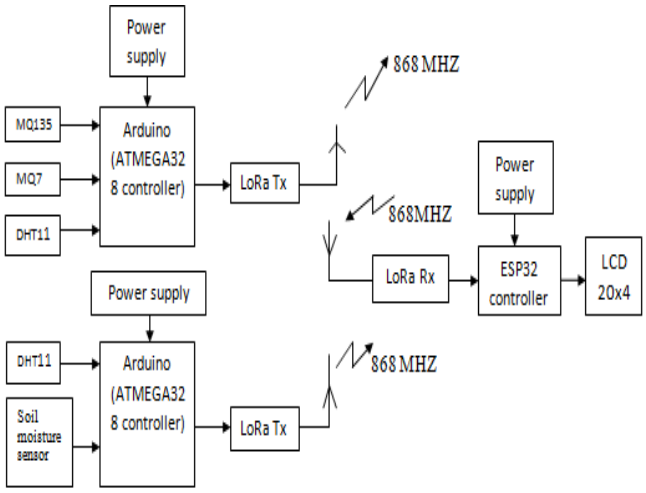

Figure 1. Block Diagram of the System

The working of this adroit city application is essentially established on the remote correspondence between the sensors and various devices. Along these lines for capability reason we are using LoRa Network system, which will give compelling and streamlined results. The objective of this endeavor is to manufacture a smart city with less multifaceted nature, upgraded power supply, spending admirably arranged and capable delayed consequence of correspondence sort out. Here to perceive the climatic parameters we are setting remote sensors which will observe the sullying gases like carbon mono oxide, hydrogen sulfide gases, and smoke. We will use soil soddenness and temperature sensor to identify the sogginess in the earth. Resulting to recording the data it will send to the entry where the pro is accessible.

We are utilizing adruino uno stage for transmitting the information. Atmega328 microcontroller we are utilizing to gather the information from various sensors and set it up to transmit to the recipient area. Esp32 we are utilizing on the collector area to get the transmitted information. ESP32 is a movement of negligible exertion, low – control system on chip microcontrollers with consolidated Wi-Fi and twofold mode Bluetooth.

Data accumulated from various sensors will be then arranged to make the results. This made information is then appeared on the LCD. Above square outline demonstrates the working of the air checking and crop ranch framework. The framework is separated mostly into 3 section to be specific transmitter1 (Tx1), transmitter2 (Tx2) and beneficiary (Rx). Transmitter1 is utilized to gather and transmit the information from the sensors utilized for air checking while transmitter2 is utilized to gather and transmit information from the yield estate sensors. Recipient is utilized to get the transmitted information from the transmitters and procedure the information to give the ideal outcome. This ideal information is then shown in LCD.

Transmitter 1 (environmental data transmitter)

Transmitter1 is blend of MQ135, MQ7 gas sensor DHT11 Humidity, Temperature sensor, Lora module for remote transmission and Microcontroller. It is called as Environmental sensors. The gas sensor is interface to the simple stick which is in simple in structure. The DHT11 works sequentially so it is sequentially interface. The Lora module utilizes SPI convention to transmit and get the information. All the three sensors Gas sensors and temperature and stickiness are giving their information to the controller. The errand of controller to process these information and send it to the recipient side for air checking utilizing lora convention.

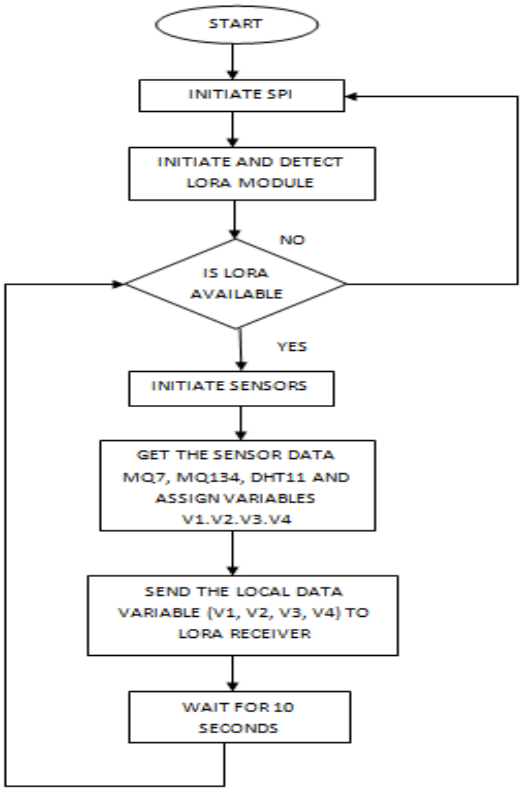

Figure 2. **Flowchart of Transmitter of Environmental Sensors**

Algorithm of Transmitter (Environmental Node Circuit)

Step 1. Start the circuit by connecting the power supply
Step 2. Start the SPI protocol
Step 3 detect the LoRa module (868 MHz)
Step 4 If LoRa Available start all the sensor otherwise goto step 2
Step 5 Get the data from all the sensors (MQ7, MQ135 and DHT11)
Step 6 Send the data received from the sensor to LoRa receiver
Step 7 Wait for 10 seconds
Step 8 Goto step 4

Transmitter 2 (plantation data transmitter)

Transmitter2 made up of DHT 11, Soil moisture sensor, Microcontroller which has a place with AVR family and Lora module. DHT 11 and Soil moisture sensors are consolidate called as crop plantation sensor. Microcontroller gathers the information from crop plantation sensors and send it remotely through Lora module to the Receiver.

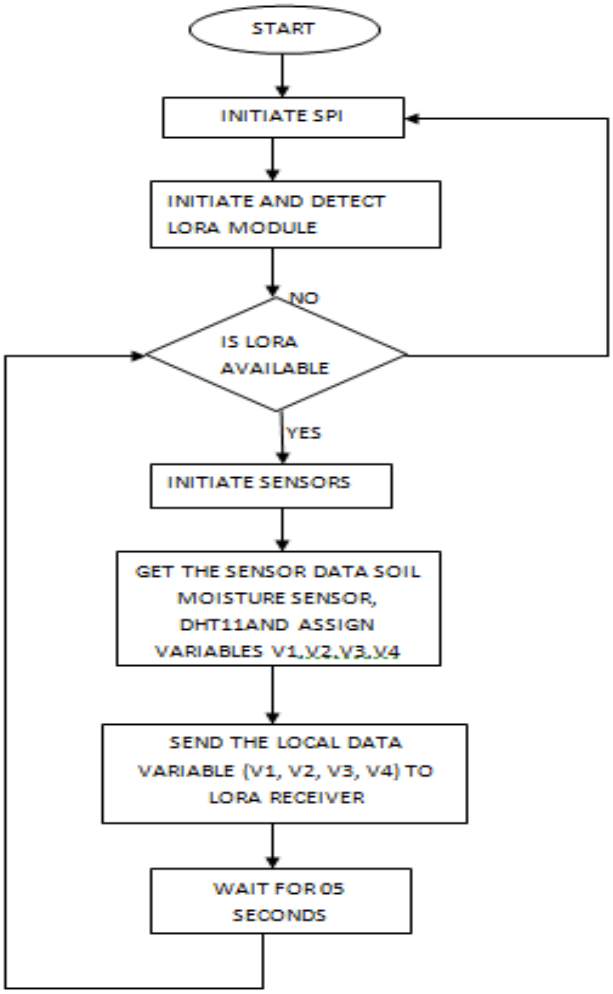

Figure 3 Flowchart of Transmitter of Plantation Sensors

Algorithm of Transmitter (Plantation Node Circuit)

Step 1. Start the circuit by connecting the power supply
Step 2. Start the SPI protocol
Step 3 detect the LoRa module(868 MHz)
Step 4 If LoRa Available start all the sensor otherwise goto step 2
Step 5 Get the data from all the sensors (DHT11 and soil moisture sensor)

Step 6 Send the data received from the sensor to LoRa receiver
Step 7 Wait for 5 seconds
Step 8 Goto step 4

Receiver

Recipient comprising of LCD module 20x4,ESP32 and Lora as a remote collector module. The information got from Transmitter1 and Transmitter2 are gathered remotely process through ESP32 microcontroller and show on LCD. The information constantly send by crop plantation sensors and Air quality measure sensors are gotten it and procedure persistently on continuous premise and show on LCD.

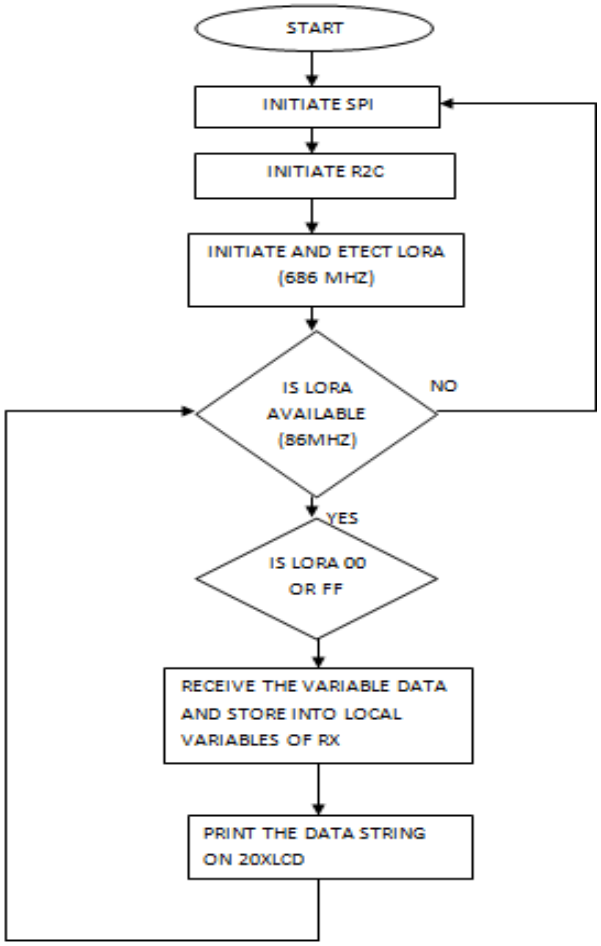

Figure 4 Flowchart of Receiver

IV. HARDWARE & SOFTWARE DISCRIPTION

MQ7 interfacing with arduino

The carbon monoxide sensor we will utilize is the MQ-7 sensor. This is a sensor that is delicate to impacts of CO. Carbon monoxide (CO) is a risky gas which is unscented, dry, and bland, so it can't be smelt, seen, or tasted. An individual truly would have no clue that they are taking in CO other than the way that they would begin to feel loathsome. Carbon monoxide is created from the halfway oxidation of carbon-containing mixes; it structures when there isn't sufficient oxygen to deliver carbon dioxide, for example, when working a stove or an inside ignition motor in an encased space. Within the sight of oxygen, including air focuses, carbon monoxide ignites with a blue fire, delivering carbon dioxide. So it is truly in encased spaces with halfway oxidation of carbon items that makes the threat of carbon monoxide generation in homes or in organizations.

Figure 5. MQ7 SENSOR BOARD

There 4 leads are +5V, AOUT, DOUT, and GND.
The +5V and GND leads establishes power for the alcohol sensor.

The other 2 leads are AOUT (analog output) and DOUT (digital output). How the sensor works is the terminal AOUT gives an analog voltage output in proportion to the amount of carbon monoxide the sensor detects. The more CO it detects, the greater the analog voltage it will output. Conversely, the less CO it detects, the less analog voltage it will output. If the analog voltage reaches a certain threshold, it will send the digital pin DOUT high. Once this DOUT pin goes high, the arduino will detect this and will trigger the LED to turn on, signaling that the CO threshold has been reached and is now over the limit. How you can change this threshold level is by adjusting the potentiometer to either raise or lower the level.

MQ135 interfacing with arduino

The gas sensor module comprises of a steel exoskeleton under which a detecting component is housed. This detecting component is exposed to current through interfacing leads. This current is known as warming current through it, the gases approaching the detecting component get ionized and are consumed by the detecting component. This progressions the opposition of the detecting component which changes the estimation of the current leaving it

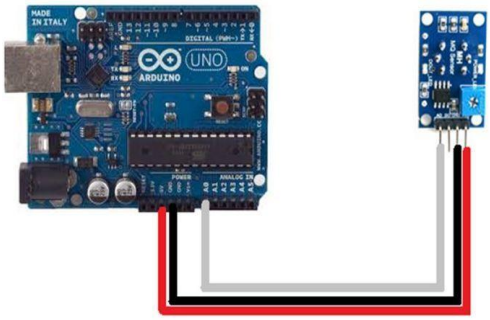

Figure 6. interfacing of mq135 with arduino

At the point when no gas digital output is 1 and analog output gives 1023 max esteem. At the point when gas is available digital output is 0 and analog output is significantly less than 1023.

Utilizing potentiometer on chip we can control the turning OFF purpose of digital stick at some estimation of analog stick. The sensor needs a heap resistor at the output to ground. Its worth could be from 2kOhm to 47kOhm. The lower the worth, the less delicate is the sensor. The higher the worth, the less exact is sensor for higher convergences of gas. On the off chance that just a single explicit gas is estimated, the heap resistor can be adjusted by applying a known grouping of that gas. In the event that the sensor is utilized to gauge any gas (like in an air quality detector) the heap resistor could be set for an estimation of about 1V output with clean air.

Interfacing the soil moisture sensor

A normal Soil Moisture Sensor comprise of two parts. A two legged Lead, that goes into the soil or anyplace else where water substance must be estimated. This has two header pins which associate with an Amplifier/A-D circuit which is thus associated with the Arduino.The Amplifier has a Vin, Gnd, Analog and Digital Data Pins. This implies you can get the qualities in both Analog and Digital structures. Most soil dampness sensors are intended to gauge soil volumetric water substance dependent on the dielectric steady (soil bulk permittivity) of the dirt. The dielectric consistent can be thought of as the soil 's capacity to transmit power. The dielectric steady of soil increments as the water substance of the dirt increments. This reaction is because of the way that the dielectric consistent of water is a lot bigger than the other soil parts, including air. In this manner, estimation of the dielectric steady gives an anticipated estimation of water content.

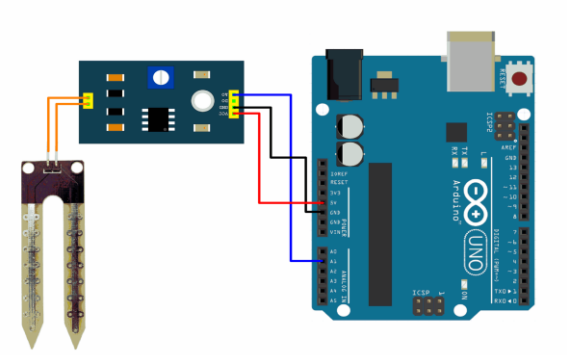

Figure 7. interfacing of arduino with soil moisture sensor

The Module likewise contains a potentiometer which will set the threshold value and after that this threshold value will be looked at by the LM393 comparator. The output LED will illuminate and down as indicated by this threshold value. To associate the sensor in the analog mode, we should utilize the analog output of the sensor. When taking the analog output from the soil moisture sensor FC-28, the sensor gives us the incentive from 0-1023. The moisture is estimated in rate, so we will delineate qualities from 0 - 100 and afterward we will demonstrate these qualities on the sequential screen. You can additionally set various scopes of the moisture value and turn on or off.

Interfacing DHT11 with arduino

DHT11 sensor is utilized to measure the temperature and humidity. It has a resistive humidity detecting part and a negative temperature coefficient (NTC). A 8 bit MCU is likewise associated in it which is in charge of its quick reaction. It is reasonable yet it gives estimations of both temperature and humidity at once.

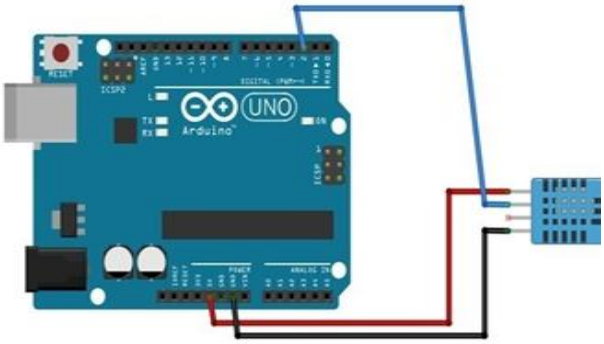

Figure 8 interfacing of arduino with dht11.

DHT11 interfacing with arduino

As a matter of first importance interface the ground and the VCC of the DHT11 temperature and humidity sensor to the ground and 5v of the Arduino. At that point associate the information stick of the DHT11 sensor to the pin 2 of the Arduino

Lora and ESP32 Interfacing

To send and get LoRa messages with the ESP32 we'll be utilizing the RFM95 transceiver module. All LoRa modules are transceiver, which means they can send and get data. We will require 2 of them.

Figure 9 lora module RFM95

Wiring the RFM95 LoRa Transceiver Module

The RFM95 LoRa transceiver module communicates with the ESP32 utilizing SPI communicationconvention. In this way, we'll utilize the ESP32 default SPI pins. Wire both ESP32 boards to the relating transceiver modules as appeared in the following schematic graph.

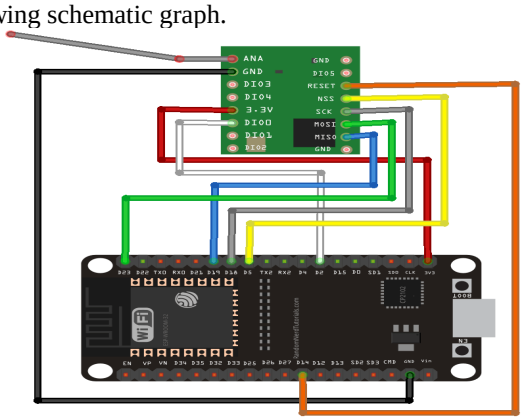

Figure 10 interfacing of lora module and esp32

Arduino Software

Arduino is an open source PC equipment and programming organization, undertaking, and client network that plans and fabricates single-leading group of the microcontrollers and microcontroller units for structure computerized gadgets and intuitive items that can detect and control protests in the physical and advanced world. The task's items are circulated as open-source equipment and programming, which are authorized under the GNU Lesser General Public License (LGPL) or the GNU General Public License (GPL),[1] allowing the assembling of Arduino sheets and programming conveyance by anybody. Arduino sheets are accessible financially in preassembled structure, or as do-it-yourself (DIY) units.

Arduino board plans utilize an assortment of chip and controllers. The sheets are outfitted with sets of advanced and simple input/output (I/O) sticks that might be interfaced to different development sheets or Breadboards (shields) and different circuits. The sheets highlight sequential correspondences interfaces, including Universal Serial Bus (USB) on certain models, which are additionally utilized for stacking programs from PCs. The microcontrollers are regularly modified utilizing a vernacular of highlights from the programming dialects C and C++. Notwithstanding utilizing conventional compiler toolchains, the Arduino undertaking gives a integrated development environment (IDE) in view of the Processing language venture. The Arduino venture began in 2003 as a program for understudies at the Interaction Design Institute Ivrea in Ivrea, Italy,[2] planning to give a minimal effort and simple route for fledglings and experts to make gadgets that connect with their condition utilizing sensors and actuators. Regular instances of such gadgets expected for learner specialists incorporate straightforward robots, indoor regulators, and movement locators. The name Arduino originates from a bar in Ivrea, Italy, where a portion of the authors of the undertaking used to meet. The bar was named after Arduin of Ivrea, who was the margrave of the March of Ivrea and King of Italy from 1002 to 1014.

How to start ESP32 with LoRa using Arduino software

For preparing the arduino to program the ESP32 we have to first install the LoRa library in the software. For installing LoRa library Open your Arduino IDE, and go to **Sketch** > **Include Library** > **Manage Libraries** and search for "**LoRa**". Select the LoRa library highlighted in the figure below, and install it.

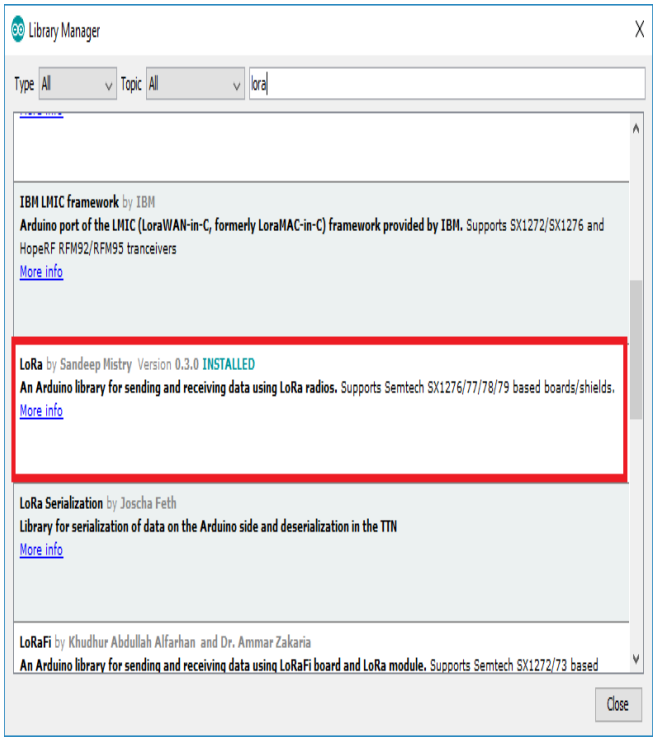

Figure 11 installing Lora library

After installing the LoRa library open the arduino uno and compose the code for accepting the information and showing on the lcd board. The code is given in the reference section 1. Transfer the code to the ESP32 board and select the right COM port for the right board. From that point onward, open the Serial Monitor, and press the ESP32 enable button. You should see a success message as appeared in the figure underneath. The counter ought to be increased at regular intervals.

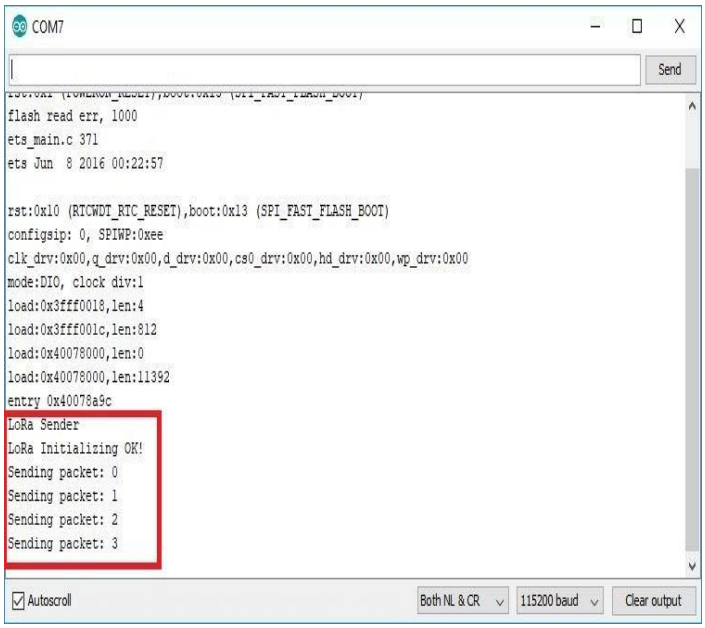

Figure 12. ESP32 with LoRa with arduino.

Comparison & Proposed Methodology

Technology	Regarding Work
Beagle bone black is used along with gas sensors [1]	CO, CO_2 content in air will be shown by Azure cloud service.
LORA network is used to note the mineral content of the soil including moisture and humidity [2]	Nitrogen, Potassium, Phosphorous, humidity and moisture of soil will be shown by email in mobile.
LORAWAN is used to monitor air in 2 cities [3]	Air quality of 2 cities is compared
Integer linear programming modules are used to compute sensor department [4]	Coverage of pollution under time varying weather condition.
NB-IOT network (Narrow Band –IOT) [5]	AQI (Air Quality Index) level of measured location.
NPCA (Non-Linear Principle Component Analysis) based EWMA (Exponentially Weighted Moving Average) GLRT (Generalized Likelihood Ratio Test) [6]	Fault detection of AQMN (Air Quality Monitoring Network).
Keil programming, Proteus software [7]	NO, SO_2, O_3 temperature humidity
IOT based Raspberry Pi module [8]	Noise, temperature, humidity.
WSN technology is used to monitor content of hazardous gases [9]	CO_2, NO, SO_2, PM, NH

V. RESULT

When we switch the power supply to the receiving circuit this message display on the lcd screen.

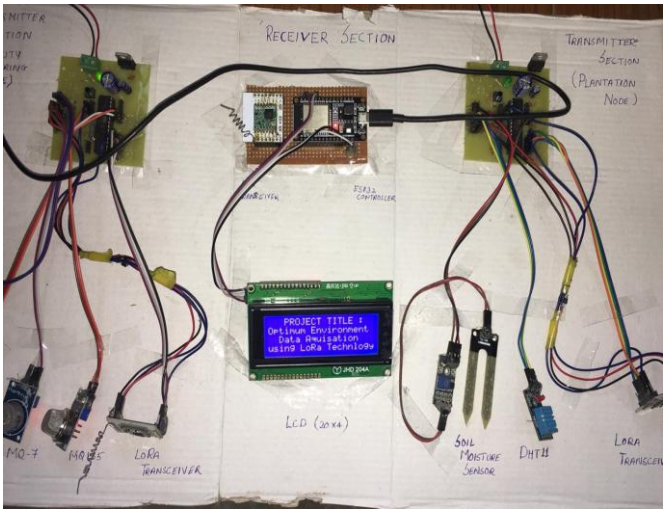

Figure 13 message displayed on starting the receiver kit.

After displaying this message the LoRa module will wait for the transmitter circuit to send the data to the receiver.

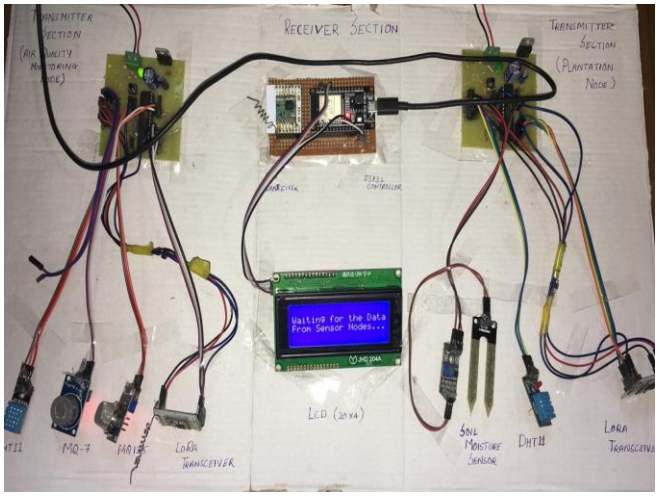

Figure 14 waiting for the sensors data

The environmental circuit data will be received by the LoRa module and it will pass the data to the ESP32 for processing the data for displaying the required result on LCD.

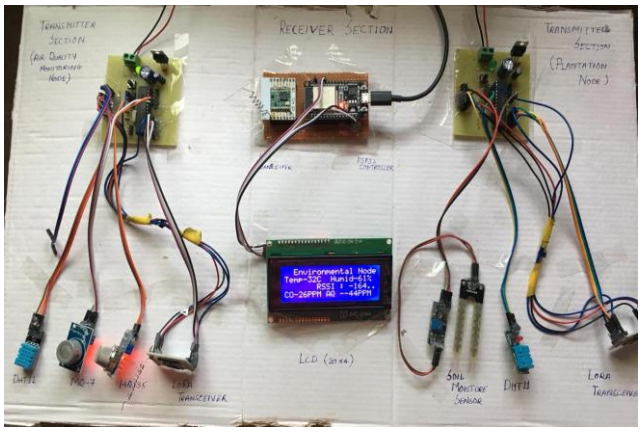

Figure 15 result of data from environment sensors

- The temperature of the current place will be shown in celcius.
- The humidity in the air will be shown in percentage as displayed in above figure.
- The RSSI value is the received signal strength indicator which shows the signal strength of the signals transmitted from distant.
- The carbon monoxide gas present in the air will be displayed in PPM (parts per million)
- The harzdous air present in the environment will be displayed as air quality (AQ) in PPM(parts per million)
- The plantation node data will be received by the LoRa module and following results will be displayed.

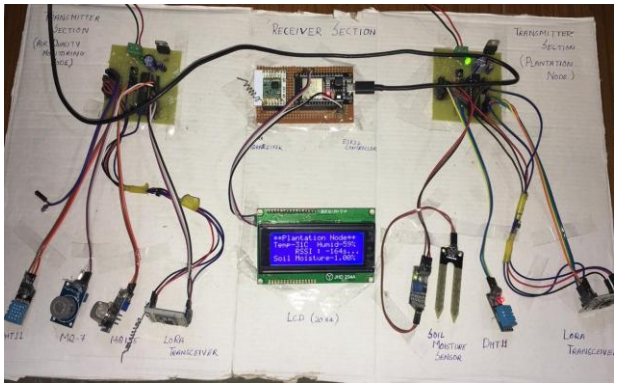

Figure 16 data from the plantation node

- The temperature of the field will be shown in celcius
- The humidity of the air in the field where the sensors are placed will be displayed
- The signal strength at which the data is transferred will be displayed as RSSI value.

The soil moisture will be displayed in percentage to keep a check on the moisture content of the soil and water will be provided when moisture of the soil decreases

VI. CONCLUSION

Wireless sensor networks have a colossal potential for keen checking frameworks. The capacity to grow ease and straightforward end gadgets for rapidly sending in the field makes WSNs extremely appealing for keen air checking frameworks and yield estate observing framework. In spite of the fact that there are different choices for the decision of correspondence convention and radio innovation reasonable for conveying remote sensor systems, LoRa ends up as the winner as a strong, dependable, oversimplified, minimal effort and profoundly adaptable arrangement. The greater part of the exploration in LoRa put together sensor systems centers with respect to hypothetical parts of correspondence conventions and system proficiency. There is a hole in the writing about the building structure and use of such frameworks for a genuine application. In addition, the greater part of the designing work centers around LoRa WAN as the systems administration convention of decision for sending LoRa based sensor systems. In spite of the fact that LoRa WAN is a demonstrated and expand organizing convention for LPWAN applications, low-thickness systems can be conveyed utilizing amazingly basic and successful conventions planned explicitly for the application. This theory concentrated on structure, advancement, and use of LoRa innovation utilizing ease arrangements accessible in the market. A straightforward convention for low-thickness rural observing framework was plan and executed. The information from endpoints was directed to a straightforward web interface through a Linux based single board PC.

REFERENCES

1. Nitin Sadashiv Desai, John Sahaya Rani Alex "IoT based air pollution monitoring and predictor system on Beagle Bone Black" 2017 IEEE.
2. Sushmita Tapashetti, Dr. Shobha K.R."Precision Agriculture using LoRa" International Journal of Scientific & Engineering Research,Volume 9, Issue 5, May-2018.
3. Fanghao Yu, Ziming Zhu, Zhong Fan "Study on the feasibility of LoRa WAN for smart city applications" 2017 Tenth IEEE International Workshop on Selected Topics in Mobile and Wireless Computing.
4. Ahmed Boubrima, Walid Bechkit and Hervé Rivano "Optimal WSN Deployment Models for Air Pollution Monitoring" 2017.2658601, IEEE Transactions on Wireless Communications.
5. Sarun Duangsuwan, Aekarong Takarn, Punyawi Jamjareegulgarn "A Development on Air Pollution Detection Sensors based on NB-IoT Network for Smart Cities" The 18th International Symposium on Communications and Information Technologies (ISCIT 2018).
6. Raoudha Baklouti, Ahmed Ben Hamida, Majdi Mansouri, Mohamed-Faouzi HARKAT, Mohamed Nounou, Hazem Nounou "Effective Monitoring of an air quality network" 4th International Conference on Advanced Technologies For Signal and Image Processing ATSIP2018 March 21-24, 2018 Sousse, Tunisia.
7. Xuan Zhao, SimingZuo, Rami Ghannam, Qammer H. Abbasi and Hadi Heidari "Design and Implementation of Portable Sensory System for Air Pollution Monitoring" 2018 IEEE Asia Pacific Conference on Postgraduate Research in Microelectronics and Electronics.
8. Arnab Kumar Saha, Sachet Sircar, Priyasha Chatterjee, Souvik Dutta, Anwesha Mitra, Aiswarya Chatterjee, Soummyo Priyo Chattopadhyay, Himadri Nath Saha "A Raspberry Pi Controlled Cloud Based Air and Sound Pollution Monitoring System with Temperature and Humidity Sensing" ©2018 IEEE.
9. Nagaraj S, Dr. Rajashree V. Biradar "Applications of Wireless Sensor Networks in the Real-Time Ambient Air Pollution Monitoring and Air Quality in Metropolitan Cities- A Survey" 2017 IEEE.

Twinkle H. Agrawal is an M. Tech student in Electronics and Telecommunication Department at Ballarpur Institute of technology in Ballarpur, Maharashtra. She is supervised by Professor Sunil V. Kuntawar. She obtained her engineering degree from Gondwana University in 2017. Her current research work focuses on innovations in wireless sensor networks to develop handy devices for air pollution monitoring technology and crop plantation. She has also published a review paper in International Organization of Scientific Research based on LPWAN Technology.

Sunil V. Kuntawar is an assistant Professor with Electronics and Telecommunication Department at Ballarpur Institute of Technology, Ballarpur, Maharashtra State. He obtained his M.E in VLSI and Embedded System Design from North Maharashtra University, Jalgaon in 2014 and his engineering degree from Sant Gadge Baba Amravati University in 2011. His main research domain includes embedded system with PLC.