International Journal of Recent Technology and Engineering (IJRTE)
ISSN: 2277-3878, Volume-8 Issue-3, September 2019

A New Technology for Dust Removal from Cotton Processing

Khodjiev Muksin, Abbazov Ilkhom, Karimov Javlon

***Abstract*: This article discusses the ways in which technology can be developed in the world. Scientific research is being carried out on a broad range of them to scientifically substantiate and improve them. It is justified on what needs to be considered.**
According to a study on dust collectors used in ginneries. The dust concentration is based on the relevance of today's dust emissions to the atmospheric dust and the technology of fiber waste removal. To keep fibrous waste from dusty air content. It provides information on the operation mode of the equipment and its geometric parameters to create its technology.
When selecting the parameters of the elastic waste disposal system, it is based on the width of the net surface hole, the number of turns of the grass and the length of the net surface.
The results of the experiments to prevent aerodynamic resistance of airflow in the removal of fertile waste are given. These parameters, taken as an unwanted parameter, are selected to reduce the impact of dust transport on pneumatic parameters and technological processes. It is based on the obtained parameters that experiments are tested on the basis of test methods and their criteria.The main purpose of the experiment is to prevent loss of speed in the fiber optic clamp. Each experience has a schedule for planning. After each experiment, the total mass of the fibrous mass was detected and the amount of time spent. Improved performance of the enhanced device has been identified.
On the basis of the obtained regression equations, the air velocity of the incoming pipe is affected by the width of the net surface of the device. Effects of the air flow in the inlet pipe on the number of rotations of the grass. Furthermore, the graphical results of the air velocity in the unwanted pipe are influenced by the effect of the fibrous waste disposal device on the surface of the net surface.
Based on the findings, it is scientifically justified that the fishing gear is primarily due to the loss of fossil waste, ambient air pollution, and improved dust collector efficiency.

***Index Terms*: atmospheres, dust extinction, fusible wastes, net surfaces, shrubs, regressions,**

I. INTRODUCTION

According to the statistics of the World and the International Cotton Advisory Council (ICAC), the United States, India, Australia, Brazil, Uzbekistan, as well as imports, Ve'tnam, China, Turkey, Bangladesh, [1]. We are interested in increasing the efficiency and rational utilization of production capacity by introducing modern equipment to companies in the sector for the consistent and sustainable development of the cotton industry, which is important for producing competitive products in the global cotton market. In this regard, scrutiny of the high productivity in the world cotton production industry and the creation of renewable technologies is of particular interest.

The following are important for conducting vast scientific research to improve the technical, technical and scientific foundations of the world's first level of processing.

Development of scientific basis for cotton transport mechanism and multi-stream transport mechanism

Determine the parameters of the face separation mechanism from the air component.

Do not leave the laws of motion of air movement and air purification techniques.

You need to define the work tip, workpiece parameters and parameters of the workpiece.

II. LITERATURE REVIEW

Analysis of literature on dust collectors used in Ginneries [2] Show energy consumes a lot of energy. Therefore, the tendency to reduce cylindrical dust slots is widespread. Despite this trend, dry dust collectors are widely used to clean dusty environments that come from the house. The dry dust slots have two stream dust slots. Nowadays dust is commonly used in the industry as a shareholder's flow.

[3] The dust holder implies that it is for dust removal as well as for dust removal. In general, a static reduction of air pressure must be performed in the standard setting [4] for the dust slots to work effectively. In this case, the change in static pressure is determined by the geometric size of the dust slots. [5] also shows that the air speed varies with the power consumption of the ventilator, which generates air pressure into the dust sleeve. Making an angular dust groove in [8] provides the ability to regulate waste.

III. RESEARCH METHODS

Consider the analysis. We need to analyze the following to analyze the technical process of ginneries, including the removal of fiber from dusty air and the concentration of precipitation into the atmosphere. First of all, we have to analyze the dust groove used at home and abroad.

Manuscript published on 30 September 2019
* Correspondence Author
Khodjiev Muksin*, Professor of Guliston State University, Gulistan, Uzbekistan.
Abbazov Ilkhom, PhD of Jizzakh Polytechnical Institute, Jizzakh, Uzbekistan.
Karimov Javlon, Assistant of Guliston State University, Gulistan, Uzbekistan.

The new technology to remove fibrous waste from dusty airflows is different from the technology that we have built with our previous strengths. Due to the numerous aerodynamic resistances to the airflow of existing structures, the possibilities for production are limited.

Figure 1 shows the horizontal slope of the proposed dust slot.

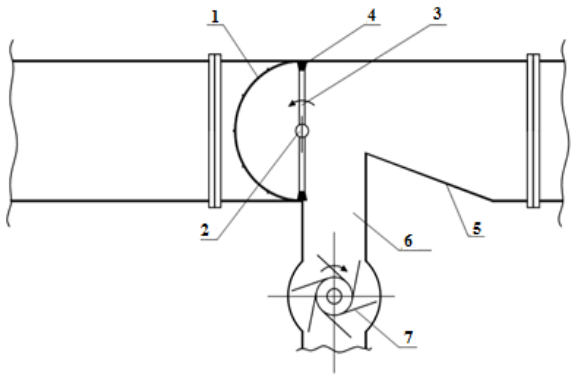

Figure 1. Permissible waste treatment equipment

1-face; 2-bullets; 3-grass; 4-Grate brush; 5-weather direction; 6-Textile waste collection bunker; 7-Vacuum valve.

The dustproof technology works as follows. When airflow is introduced from the direction of the radiator (5) to the top of the camera, dusty airflow flows through the inflow pipe and dusty airflow reaches the net surface (1). The fibrous waste exposed in the web (1) is cleaned by the three shrub cleaning brushes (4). The purge air passes through the net surface.

Large dust particles and fibrous debris together with the raised surface (1) are removed and the brush (3) is pivotally slid out of the pit waste to the vacuum valve

(7) and removed from the tube (6).

When choosing the geometric dimensions of the garbage disposal system, the dimensions of the net surface were tested at 1,2 mm and 2,5 mm, allowing the propellant to propel the air into the diameter of the pipeline. It is assumed that all nets occur and air flow rates and fiber waste passages occur to prevent aerodynamic resistance of incoming airflow.

In other versions, select the net length. The more dusty surfaces, the longer the surface of dusty air. In carrying out the experiments, we conduct tests on 0,5 m and 2 m long mesh surfaces.

Experimental tests were performed to determine the geometric dimensions of the coarse gear holding device and to investigate the impact of the air surface on the air surface. Three unnecessary elements were selected based on experimental testing.

Width of perforated hole – x_1

As you know, the width of the net hole has a significant effect on the speed of airflow through textile waste treatment. Widening the hole will overflow fiber waste. As the width of the hole becomes smaller, the speed of the airflow drops significantly. Thus, the experiment was carried out with various variations of the width of the net hole from 1,2 mm to 2,5 mm.

Rotation per milliliter – x_2

When filling fertile wastes, a fibrous layer is formed on the substrate due to certain fibrous waste. This dramatically affects the speed of air flow through the net surface. Therefore, it is important to catch the fibrous mass from the net. In this experiment we chose 3 to 400 r/min to 900 r/min at 600 to 1000 r/min and 500 r/min to 1000 r/min.

Length of corrugated surface – x_3

The surface of the hollow surface should be more uniform or larger than the surface of the tube so that the flow of air through the pipe is not blocked. Low air pollution. Considering this result, the geometric dimensions of the equipment are also taken into account and the width of the net surface is 0,5 to 2 m.

We will consider establishing a mathematical model to study the effects of dust air on the air velocity of fiber waste treatment technology.

Table 1.Condition of experiment plan

№	Factor name,	Coded basis Indication	Factor range of actual			value
			-1	0	+1	
1	Width of perforated hole, mm	x_1	1,2	1,85	2,5	0,65
2	Rotation per milliliter, r/min	x_2	400	650	900	250
3	Length of corrugated surface, m	x_3	0,5	1,25	2	0,75

Table 2Condition of experiment plan

№	Factor name,	coded basis Indication	Factor range of actual			value
			-1	0	+1	
1	Width of perforated hole, mm	x_1	1,2	1,85	2,5	0,65
2	Rotation per milliliter, r/min	x_2	600	800	1000	200
3	Length of corrugated surface, m	x_3	0,5	1,25	2	0,75

Table 3Condition of experiment plan

№	Factor name,	coded basis Indication	Factor range of actual			value
			-1	0	+1	
1	Width of perforated hole, mm	x_1	1,2	1,85	2,5	0,65
2	Rotation per milliliter, r/min	x_2	500	750	1000	250
3	Length of corrugated surface, m	x_3	0,5	1,25	2	0,75

In this experiment, the width of the net is 1,2 mm in width. We observe the process of influencing air velocity through a 2.5 mm fiber trash retention device. As the incoming factors, the width of the net surface, the number of turns of the grass and the length of the net surface were taken. The following are the terms of the experiment Table 1-3.

The experiments were carried out on the fibrous waste laboratory equipment with pre-sampled dust collector's workshop from the Jinish workshop of Mitan pakhta tozalash JSC in Ishtixon district, Samarkand Province [9]. The workpiece of the experimental laboratory device detachable device is shown in Figure 2.

Figure 2. Dust component is the working piece of fibrous waste separation equipment

The main purpose of the experiment is to prevent loss of speed at the fiber-optic handling equipment. Each experimental plan was arranged according to the order. An average of 1 hour is allocated for each experiment. After each experiment, the total mass of the fibrous mass was detected and the amount of time spent. Based on this, the performance of the transmitting device was detected.

Results obtained from experiments resulted in recycling of regression equations with regression equations. They are listed below:

$$Y_R = 6{,}6333 + 1{,}8333x_1 + 0{,}3x_2 + 0{,}575x_3 + 0{,}0333x_1x_2 - \\ - 0{,}1083x_1x_3 + 0{,}0583x_2x_3 + 0{,}0417x_1x_2x_3$$

To get the latest look of the model we will check the importance of coefficients. For this purpose, Styudent's criterion was used.

$$S^2(\bar{y}) = \frac{1}{N}\sum_{u=1}^{N} S_u^2(y) = \frac{0{,}11}{8} = 0{,}01375;$$
$$S(\bar{y}) = \sqrt{S(\bar{y})} = \sqrt{0{,}01375} = 0{,}11726 \qquad (1)$$
$$\Delta b = t_T \frac{S(\bar{y})}{\sqrt{N}} = 2{,}12 \cdot \frac{0{,}11726}{\sqrt{8}} = 0{,}08789$$

The value of Styudent's criterion tables

$$t_T\left[P_D, f(S_u^2) = N(m-1)\right] = t_T\left[P_D = 0{,}95;\ f = 8\cdot(3-1) = 16\right] = 2{,}12.$$

That means $b_0, b_1, b_2, b_3 \geq \Delta b$ the coefficients of the coefficients are higher than the table values, so these coefficients are significant, and the remaining coefficients are negligible. As a result we create the following model:

$$Y_R = 6{,}6333 + 1{,}8333x_1 + 0{,}3x_2 + 0{,}575x_3 \qquad (2)$$

We use Fisher's criterion to check the model's admissibility.

$$S_{\text{над}}^2(y) = \frac{\sum_{u=1}^{N}(\bar{y}_u - \bar{y}_{Ru})^2}{N-k-1} = \frac{0{,}14389}{8-3-1} = 0{,}03597 \qquad (3)$$

That's the end $S^2(\bar{y}) = 0{,}01375$ the sum of the criterion is calculated by the formula:

$$F_R = \frac{S_{над}^2}{S_y^2} = \frac{0{,}03597}{0{,}01375} = 2{,}6162 \qquad (4)$$

The Fisher criteria in the table are found in the special table:

$$F_T\left[P_D = 0{,}95;\ f\left(S_y^2\right) = 16,\ \ f\left(S_{\text{над}}^2\right) = 4\right] = 5{,}85. \qquad (5)$$

That means, $F_R < F_T$ because the model is adequate, meaning that it is equivalent to the change in airway performance when handling fiber waste [10-11].

IV. RESULTS AND DISCUSSION

The effect of the grass surface on the speed of air passing through the fibrous waste disposal device is shown in (Figure 3).

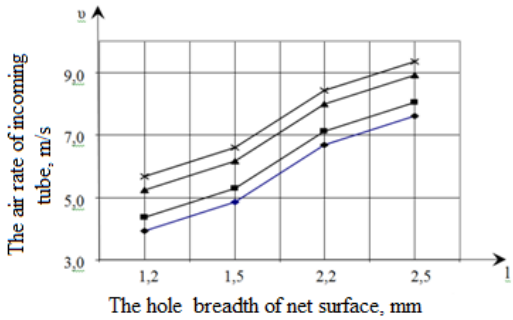

Figure 3. The effect of the width of the ridge net surface hole on air velocity

The results show that the larger the width of the net surface, the higher the air velocity. The impact on the air velocity while retaining the width of the fibrous surface is 45%.

Figure 4 shows the effect of turbine rotations on air velocity on the fibrous waste dispensing apparatus.

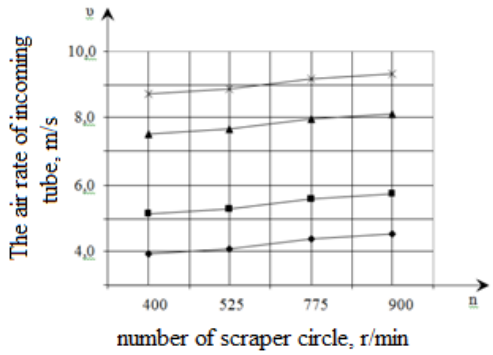

Figure 4. Effects of rotation on air velocity

As you can imagine in Picture 4, we can say that as the grass turns to an increase, the air velocity increases. The effectiveness of the handicap on the air velocity in catching fiber waste amounts to an average of 10%.

The effect of the adjacent surface on air velocity is shown in Picture 5.

As you can imagine in Figure 5, we can say that the air velocity increases with the length of the net surface. The duration of the fibrous surface is about 15% of the total airflow rate.

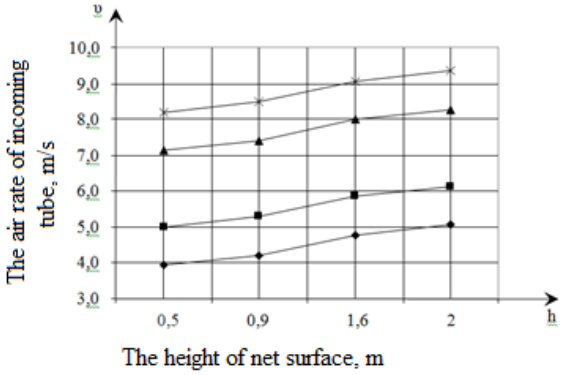

Figure 5. The effect of the length of the inert surface on air velocity

The width of the net surface to minimize the aerodynamic resistance of the extrudate removal device, the number of turns of the grass and the width of the net surface are affected by the width of the net surface, which affects the air velocity at an average of 45%.

Table 4 lists the quantities of technological indications from the introduction of the proposed new technology.

Table 4 Technological indicators from the introduction of improved equipment in production

№	Rename	unity	Technological indications	
			Available	Improved
1	Displacement of Tolerable Wastes	%	0	90
2	Ambient dust concentration	мг/м 3	250	102
3	Cleaning the dust cradle	%	60-65	95-98

V. CONCLUSIONS

So, the new technology offered on the basis of the results has quite a few advantages. First, increase the efficiency of pollinated air conditioning from 60 to 70% to 95-98%; Secondly, dust concentration in the atmosphere is reduced to 250 mg/m3 to 102 mg/m3, ie by 2,5 times.

Acknowledgment. From these results, we can see that the effect of air velocity on the width of the net is 45%, while the average gradient turnover is about 10%.

The width of the net surface to minimize the aerodynamic resistance of the extrudate removal apparatus is the width of the net surface affected by the number of turns and the net surface of the grid, which affects the air velocity by an average of 45% of the air velocity increase.

Multiple factor regression equations in the laboratory equipment, and the results obtained, allow the production equipment to select the working parts and geometric parameters, and determine the rational values and allow them to make recommendations for the practical application of the fiber waste disposal apparatus.

The proposed technology has been introduced in the Samarkand region “Mitan pahta tozalash” JSC, and the practical application of the information given above has been practically proved.

REFERENCES

1. Cotton: World Statistics. http://www.ICAC.org; https://www.statista.com.
2. P.A. Funk, D.P. Whitelock “Advances in dust cyclone research” American Society of Agricultural and Biological Engineers Annual International Meeting 2012, ASABE 2012 year 4, pp. 2817-2834
3. D.P. Whitelock, M.D. Buser “Multiple series cyclones for high particulate matter concentrations” Applied Engineering in Agriculture 2007 -ISSN:0883-8542 23 (2), pp. 131-136.
4. K.D.Beker, P.A.Funk, S.E. Hughs “Over-sized cyclones for low pressure cotton gin exhausts” Applied Engineering in Agriculture 2004 year 20 (4), pp. 413-415
5. P.A. Funk S.E. Hughs and G.A. “Holt Entrance velocity optimization for modified dust cyclones” Journal of Cotton Science 2000 - ISSN:1523-6919 4 (3), pp. 178-182
6. M.Xodjiev, I.Abbazov, O.Alimov, R.Karimova The Composition of Releasing Passion of Dusty in the Process of Pat // International Journal of Engineering and Advanced Technology ISSN: 2249-8958 Volume-8, Issur-3S (2019) –pp. 279-283.
7. M.Xodjiev, I.Abbazov, O.Alimov, J.Karimov Fraction Structure of Cotton Cleaning Equipment in Cotton Enterprises and Their Cleaning Effectiveness // International Journal of Advanced Research in Science, Engineering and Technology ISSN: 2350-0328 Vol.6 Issue 1 (2019) –pp. 7983-7988.
8. M.Xodjiev, I.Abbazov, B.Mardonov, O.Sarimsakov Effective Cleaning of Cotton Waste Produced at Cotton Cleaning Factories // American Association for Science and Technology ISSN: 2375-3803. Volume-5, Issur-2 (2017) –pp. 22-28.
9. M.Xodjiev, I.Abbazov, B.Qarshiye Increase of an overall performance of a deduster on cotton ginning enterprises // European science review ISSN: 2310-5577 (2016) –pp. 171-173.
10. А.Г.Севостьянов. “Методы и средства исследования механико - технологических процессов текстильной промышленности”. М., “Легкая индустрия” 1992. -с. 92-105.
11. 2. А.Г.Севостянов, А.Г.Севостянов. “Оптимизация механико - технологических процессов текстильной промышленности”. М., “Легпромбиздат”, 1991. с. 16-30.

AUTHORS PROFILE

Hodjiev Muksin Tadjievich was born on November 29, 1957 in Kokand, Ferghana region, in the educated family. In 1975 he entered the Tashkent Institute of Textile and Light Industry. He began his career at the Scientific Laboratory of Cotton Initial Processing from 1980. In 1989, he began his career in the Technology of Textile Materials and Pre-Raw Materials Processing Specialist Candidate of technical sciences.1998 PhD in technical sciences on textile materials technology and initial processing of raw materials was. Today Rector of Gulistan State University. e-mail: m.xojiyev@titli.uz, phone: +99890-4005779

Abbazov Ilhom Zapirovich was born in 1986 in Ishtikhan district of Samarkand region. He was accepted to the 1st class in the school No. 33 in Ishtihon district. In 2000 she was admitted to the lyceum №1 directed to the exact subjects. In 2005 he entered the Tashkent Institute of Textile and Light Industry on the basis of state grant. Since 2011, she worked at the Tashkent Institute of Textile and Light Industry and the department of Ecology. PhD in Technical Science and Technology of Raw Material Processing (Ph.D). Today docent of Jizzakh Polytechnical Institute e-mail: ilhom.abbazov.86@mail.ru, phone: +99899-8114986

Karimov Javlanbek Djumabaevich was born on April 8, 1989 in Boyovut district of Syrdarya region. On September 1, 1996 he was enrolled in the first class of the 42nd secondary school Nodira in Boyovut district. Graduated from the school with honors and in 2009 received the state grant of "Technological machines and equipment" of the Tashkent Institute of Textile and Light Industry. In 2013, he graduated from the Institute with excellent marks and became a teacher at the College of Light Industry. He is currently working as a teacher at the Department of Agricultural Processing Technology of Gulistan State University. e-mail: javlon1989@mail.ru, phone: +99891-5000091