Research and Control of STATCOM using ANN and ANFIS

M.R. Mohanraj, R. Prakash

Abstract--- ***Power quality issues are of great concern in transmission and distribution system now a day due to the sensitive nature of the loads. The sensitive nature of the load increases with the advent of power electronic technology. It has become important, particularly, with the introduction of sophisticated devices, whose performance is very sensitive to the quality of power supply that results in a failure of end use equipment. In distribution systems voltage sag are more prominent. Power quality problems cannot be eliminated by using conventional filters. Therefore power electronic based Active Power Filters (APF) are most commonly used now a days. Voltage sag problems are the most frequently occurring and detrimental power quality problems. At present, a wide range of very flexible controllers, are emerging for custom power application to correcting the voltage sag in a distributed system. Among these controllers STATCOM are most effective devices, along with controlling methodology Mamdani Fuzzy Controller (MFC), ANN and ANFIS controllers. A STATCOM inject the voltage in series with the system voltage and a STATCOM injects a current into the system to correct the voltage sag. In their existing system they should be performance of STATCOM using PI controller showed to be better performance for solving voltage sag problem. But we are going to propose the ANN and ANFIS on STATCOM in order to increase the efficiency and their better performance to rectify the power quality problems.***

Keywords--- ***THD Reduction, Voltage Swell Voltage Sag, Harmonics, Reactive Power STATCOM, ANN and ANFIS, MATLAB/ Simulink.***

I. INTRODUCTION

In practice, power systems, the nonlinear load at distribution end predominantly affects the quality of power supplies. While power disturbances occur on all electrical systems, the sensitivity of today's sophisticated electronic devices makes them more susceptible to the quality of power supply.

Power Quality problems encompass a wide range of disturbances such as voltage sags/swells, flicker, harmonics distortion, impulse transient, and interruptions.

Voltage sag or dip: A voltage dip is used to refer to short-term reduction in voltage of less than half a second. Voltage sags can occur at any instant of time, with amplitudes ranging from 10 – 90% and a duration lasting for half a cycle to one minute [1].

Voltage swell: Voltage swell is defined as an increase in RMS voltage or current at the power frequency for durations from 0.5 cycles to 1 min.

Voltage 'spikes', 'impulses' or 'surges': These are terms used to describe abrupt, very brief increases in voltage value.

Voltage transients: They are temporary, undesirable voltages that appear on the power supply line. Transients are high over-voltage disturbances (up to 20KV) that last for a very short time.

Harmonics: The fundamental frequency of the AC electric power distribution system is 50 Hz. A harmonic frequency is any sinusoidal frequency, which is a multiple of the fundamental frequency. Harmonic frequencies can be even or odd multiples of the sinusoidal fundamental frequency.

Modern electric power systems are complex networks with hundreds of generating stations and thousands of load centers are interconnected through long power transmission and distribution networks. Power quality has become one of the most prolific buzzwords in power industry, which adversely affect the normal operation of electrical or electronic equipment such as computer, drives, motion controllers and sensors have become essential for optimal productivity, consistency and quality. However these sensitive components require clean and stable electrical quality to perform properly and to avoid enormous losses in energy and money.

Poor power quality is characterized by electrical disturbances, such as transients, surges, sags (dip), power interruptions, harmonic distortion and any other distortions to the sinusoidal waveform. Among this one of the most common power quality problems today is voltage sag. A decrease in RMS voltage or current at the power frequency for durations from 0.5 cycles to 1 minute, reported as the remaining voltage.

Sag are most often caused by fuse or breaker operation, motor starting, or capacitor switching, transformer energizing, etc. These disturbances can reduce theefficiency and lifespan of electrical equipment. To evaluate power quality problems, a solution adequately, first a monitoring of voltage parameters as magnitude, phase and frequency of the fundamental and harmonic components is required. For example, an induction motor will draw six to ten times its full load current, this lagging current causes a voltage drop across the impedance of the system. If current magnitude is large relative to the system available fault current, the resulting voltage sag can be significant.

Power distribution systems, ideally, should provide their customer with an uninterrupted power flow at smooth sinusoidal voltage at the contracted magnitude level and frequency [2].A momentary disturbance for sensitive electronic devices causes voltage reduction at load end leading to frequency deviations which results in interrupted power flow, scrambled data, unexpected plant shutdowns and equipment failure. Voltage lift up at a load can be achieved by reactive power injection at the load point of common coupling (PCC).

Manuscript received September 16, 2019.

M.R. Mohanraj, Department of EEE, Excel College of Engineering & Technology, Nammakal, Tamil Nadu, India.

R. Prakash, Department of EEE, Muthayammal Engineering College, Rasipuram, Tamil Nadu, India.

The common method for this is to install mechanically switched shunt capacitors in the primary terminal of the distribution transformer. The mechanical switching may be on a schedule, via signals from a supervisory control and data acquisition (SCADA) system, with some timing schedule, or with no switching at all. The disadvantage is that, high speed transients cannot be compensated. Some sag is not corrected within the limited time frame of Mechanical switching devices. Transformer taps may be used, but tap changing under load is costly.

Since there is no standard solution which will work for every site, each mitigation action must be carefully planned and evaluated. There are different ways to mitigate voltage dips in transmission and distribution systems. At present, a wide range of very flexible controllers, which capitalize on newly available power electronics components, are emerging for custom power applications.

The solution to the above mentioned power quality problem is to use Flexible AC Transmission Systems (FACTS) and Custom Power products like STATCOM, ANN, ANFIS etc. These devices deal with the issues related to power quality using similar control strategies and concepts. Basically, they are different only in the location in a power system where they are deployed and the objectives for which they are employed.

Among these, the dynamic voltage restorer is the most effective device it is based on the VSC principle. A new PWM-based control scheme has been implemented to control the electronic valves in the two-level VSC used in the, STATCOM, ANN and ANFIS.

II. VOLTAGE SOURCE CONVERTERS

A voltage-source converter is a power electronic device, which can generate a sinusoidal voltage with any required magnitude, frequency and phase angle. Voltage source converters are commonly used in adjustable-speed drives, but can also be used to mitigate voltage sag in distribution system.

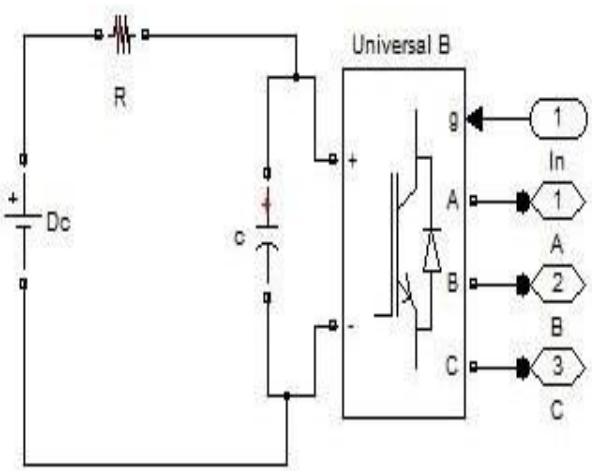

Fig. 1: Circuit Diagram of Voltage Source Converter

The VSC is used to either completely replace the voltage or to inject the missing voltage. The missing voltage is the difference between the nominal voltage and the actual. The converter is normally based on some kind of energy storage, which will supply the converter with a DC voltage. Normally the VSC is not only used for voltage sag mitigation, but also for other power quality issues, e.g. swell and harmonics [3].

Fig. 1 shows the DC source is connected in parallel with the DC capacitor. This DC capacitor could be charged by a battery source or could be recharged by the converter itself.

III. ARTIFICIAL NEURAL NETWORK (ANN) CONTROLLER

The aim of the control a Artificial Neural Network (ANN) scheme is to maintain constant voltage magnitude at the point where a sensitive load is connected, under system disturbances. The control system only measures the rms voltage at the load point, i.e., no reactive power measurements are required. The VSC switching strategy is based on a sinusoidal PWM technique which offers simplicity and good response. Since custom power is a relatively low-power application.

PWM methods offer a more flexible option than the Fundamental Frequency Switching (FFS) methods favored in flexible alternating Current transmission systems (FACTS) applications [4].

Besides, high switching frequencies can be used to improve on the efficiency of the converter, without incurring significant switching losses.

The controller input is an error signal obtained from the reference voltage and the value rms of the terminal voltage measured. Such error is processed by a ANN controller the output is the angle δ, which is provided to the PWM signal generator. It is important to note that in this case, indirectly controlled converter, there is active and reactive power exchange with the network simultaneously: an error signal is obtained by comparing the reference voltage with the rms voltage measured at the load point. The ANN controller process the error signals generates the required angle to drive the error to zero, i.e., the load rms voltage is brought back to the reference voltage. As shown in Fig. 2 ANN Controller (Artificial Neural Network controller) is a close loop controller which drives the plant to be controlled with a weighted sum of error and integral that value. ANN Controller has the benefit of Steady-state error to be zero for a step input.

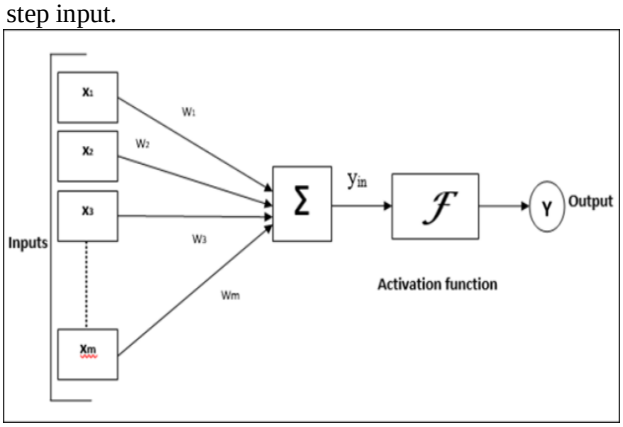

Fig. 2: Block Diagram of ANN

Output of comparator = V ref – V in

Where,

V ref= Equal 1 per unit voltage reference.

V in = Voltage in 1 per unit at the load terminals.

ANN controller input is an

actuating signal which is the difference between the V ref and Vin Output of the controller block the angles. The angle provides to PWM signal generator to obtain desired firing sequence. Fig 1.2 is shown modal of ANN controller in MATLAB.

Artificial Neural Network (ANN) has been furnished with peculiarity of parallel preparing, nonlinear mapping, cooperative memory, and disconnected and internet learning capacities. The wide employments of ANN with its overcoming results make it a successful analytic mean in electric power system.Its adaptability with huge number relevance can be seen in different territories of science and designing research.It is a mind boggling system of interconnected neurons where terminating of electrical heartbeats through its associations prompts data proliferation. ANN is prepared by utilizing earlier picked blame examples as info and set of blame data as yield for blame analysis application. Neural systems are contained fundamentally three essential learning calculations, for example, administered learning, unsupervised learning, and fortified learning. Among these managed learning is most ordinarily utilized and is likewise alluded to as learning with an educator. This is connected when the objective is having recognized esteem and is related with each contribution to the preparation. The Artificial Neural Network based techniques have been effectively connected in a few zones of the ElectricalEngineering, including identification of voltage unsettling influences, voltage and reactive power control, fault detections. In this paper,the ANN based methodology has been connected to discover the ideal area of STATCOM for voltage drop relief.

IV. ANFIS CONTROLLER

An Adaptive Neuro-Fuzzy Inference System (ANFIS) is a sort of artificial neural system that depends on Takagi–Sugeno Fuzzy inference system. Since it incorporates both neural systems.

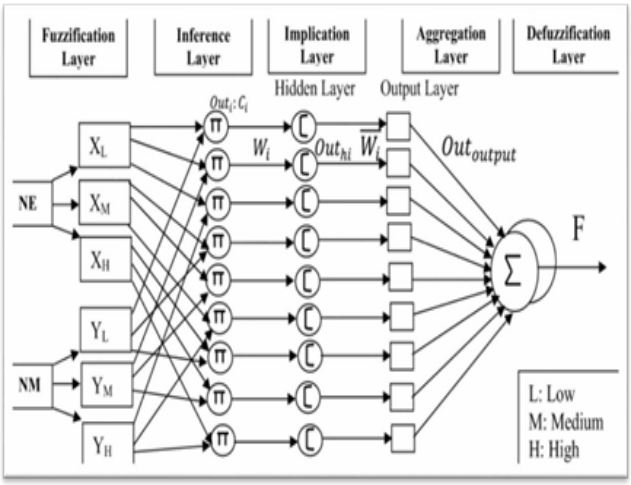

Fig. 3: Schematic Diagram of ANFIS Controller

Fuzzy rationale standards, it can possibly catch the advantages of both in a single structure. Its inference relates to a lot of fuzzy IF– THEN decides that have learning capacity to inexact nonlinear capacities. Consequently, ANFIS is viewed as an all-inclusive estimator. For utilizing the ANFIS in a progressively proficient and ideal way, one can utilize the best parameters gotten by genetic algorithm [5].

This ANFIS controller is generally utilized for controlling the non-linear system. As this is the best controller as analyzed traditional PID controller, and other controller.

V. STATCOM

It is basically one of the custom power devices. It is nothing but a Static Compensator but used at the Distribution level. The key component of the STATCOM is a power VSC (as shown in Fig. 3) that is based on high power electronics technologies.

The STATCOM is a versatile device for providing reactive compensation in ac networks. The control of reactive power is achieved via the regulation of a controlled voltage source behind the leakage impedance of a transformer, in much the same way as a conventional synchronous compensator. However, unlike the conventional synchronous compensator, which is essentially a synchronous generator where the field current is used to adjust the regulated voltage, the STATCOM uses an electronic voltage source converter (VSC), to achieve the same regulation task. The fast control of the VSC permits the STATCOM to have a rapid rate of response [6].

It is the solid state based power converter version of the SVC. Operating as a shunt connected SVC, its capacitive or inductive output currents can be controlled independently from its connected AC bus voltage. Because of the fast switching characteristic of power converters, the STATCOM provides much faster response as compared to SVC. It is a shunt connected, reactive compensation equipment, which is capable of generating and or absorbing reactive power whose output can be varied so as to maintain control of specific parameters of the electric power system. STATCOM provides operating characteristics similar to a rotating synchronous compensator without mechanical inertia, due to the STATCOM employ solid state power switching devices it provides rapid controllability of the three phase voltages, both in magnitude and phaseangle.

In addition, in the event of a rapid change in system voltage, the capacitor voltage does not change instantaneously; therefore the STATCOM reacts for the desired responses. For example, if the system voltage drops for any reason, there is a tendency for the STATCOM inject capacitive power to support the dipped voltages [7].

VI. OPERATING PRINCIPLE

Basically, the STATCOM system is comprised of three main parts: aVSC, a set of coupling reactors and a controller. The basic principle of a STATCOM installed in a power system is the generation of a controllable ac voltage source by a voltage source inverter (VSI) connected to a dc capacitor (energy storage device). The ac voltage source, in general, appears behind a transformer leakage reactance. The active and reactive power transfer between the power system and the STATCOM is caused by the voltage difference across this reactance [8]. The STATCOM is connected to the power networks at a PCC, where the voltage-quality problem is a

concern. All required voltages and currents are measured and are fed into the controller to be compared with the commands. The controller then performs feedback control and outputs a set of switching signals to drive the main semiconductor switches.

The basic diagram of the STATCOM is illustrated in Fig 4.1. The ac voltage control is achieved by firing angle control. Ideally the output voltage of the VSI is in phase with the bus (where the STATCOM is connected) voltage. In steady state, the dc side capacitance is maintained at a fixed voltage and there is no real power exchange, except for losses. The STATCOM differs from other reactive power generating devices (Such as shunt Capacitors, Static VAR Compensators etc.) In the sense that the ability for energy storage is not a rigid necessity but is only required for system unbalance or harmonic absorption.

There are two control objectives implemented in the STATCOM. One is the ac voltage regulation of the power system at the bus where the STATCOM is connected and the other is dc voltage control across the capacitor inside the STATCOM. It is widely known that shunt reactive power injection can be used to control the bus voltage. In conventional control scheme, there are two voltage regulators designed for these purposes: ac voltage regulator for bus voltage control and dc voltage regulator for capacitor voltage control.

In the simplest strategy, both the regulators are Artificial Neural Network (ANN) and Adaptive Neuro Fuzzy Inference System (ANFIS) type controllers. Thus, the shunt current is split into d-axis and q-axis components. The reference values for these currents are obtained by separate PI regulators from dc voltage and ac-bus voltage errors, respectively. Then, subsequently, these reference currents are regulated by another set of PI regulators whose outputs are the d-axis and q-axis control voltages for the STATCOM.

VII. SHUNT VOLTAGE CONTROLLER

A STATCOM (Static Compensator), which is schematically depicted in Figure 4.1, consists of a two-level Voltage Source Converter (VSC), a dc energy storage device, a coupling transformer connected in shunt to the distribution network through a coupling transformer. The VSC converts the dc voltage across the storage device into a set of three-phase ac output voltages. These voltages are in phase and coupled with the ac system through the reactance of the coupling transformer.

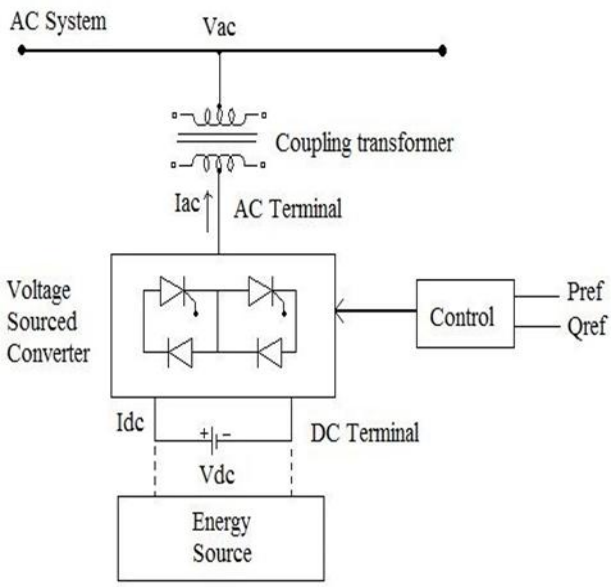

Fig. 4: Block Diagram of the Voltage Source Converter based STATCOM

STATCOM or Static Synchronous Compensator is a power electronic devices utilizing power commutated devices like IGBT, GTO and so on to control the receptive power flow through a power organize and along these lines expanding the security of intensity arrange. STATCOM is a shunt device for example it is associated in shunt with the line.

Suitable adjustment of the phase and magnitude of the STATCOM output voltages allows effective control of active and reactive power exchanges between the STATCOM and the ac system [9]. Such configuration allows the device to absorb or generate controllable active and reactive power. The VSC connected in shunt with the ac system provides a multifunctional topology which can be used for up to three quite distinctpurposes:

a. Voltage regulation and compensation of reactive power.
b. Correction of power factor.
c. Elimination of current harmonics.

Here, such device is employed to provide continuous voltage regulation using an indirectly controlled converter. Figure-10 the shunt injected current I_{sh}corrects the voltage sag by adjusting the voltage drop across the system impedance Z_{th}. The value of I_{sh} can be controlled by adjusting the output voltage of the converter.

The shunt injected current Ishcan be written as, $I_{sh} = I_l - I_s = I_l - V_{th} - [(V_{th} - V_l)/Z_{th}]$

The complex power injection of the STATCOM can be expressed as, $S_{sh} = V_l I_{sh}$

It may be mentioned that the effectiveness of the STATCOM in correcting voltage sag depends on the value of Z_{th}or fault level of the load bus. When the shunt injected current $I_{sh}$is kept in quadrature with $V_{L,}$ the desired voltage correction can be achieved without injecting any active power into the system .On the other hand, when the value of $I_{sh}$is minimized, the same voltage correction can be achieved with minimum apparent power injection into the system. The control scheme for the STATCOM follows the same principle as for ANN and ANFIS [10]. The switching

frequency is set at 475 Hz. The Equivalent Circuit of STATCOM is shown in above Fig. 4.

Each of Custom Power devices has its own benefits and limitations. Even though the distribution STATCOM have been used to mitigate the majority the power system disturbances such as voltage dips, sags, flicker unbalance and harmonics [11].

Such configuration allows the device to absorb or generate controllable active and reactive power. There are numerous reasons why the DVR is preferred over the others. A few of these reasons are presented asfollows.

The SVC pre-dates the ANN and ANFIS, but the ANN and ANFIS is still preferred because the SVC has no ability to control active power flow another reason is that the ANN and ANFIS costs less compared to the UPS. Other reasons include that the ANN and ANFIS has a higher energy capacity and lower costs compared to the SMES device.Furthermore, the ANN and ANFIS are smaller in size and costs less compared to the STATCOM [12].

Based on these reasons, it is no surprise that the ANN and ANFS are widely considered as an effective custom power device in mitigating voltage sags. Compared to the other devices, the ANN and ANFIS are clearly considered to be one of the best economic solutions for its size and capabilities.

VIII. FUZZY INFERENCE SYSTEM (FIS) & RESULTS

Fuzzy inference systems (FIS) are one of the most famous applications of fuzzy logic and fuzzy set theory. They can be helpful to achieve classification tasks, offline process SIMULINK and diagnosis, online decision support tools and process control. The strength of FIS relies on their twofold identity. On the one hand, they are able to handle linguistic concepts.

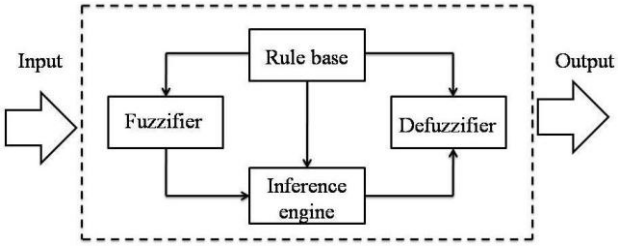

Fig. 5: The Basic Elements of a FLC

On the other hand, they are universal approximates able to perform nonlinear mappings between inputs and outputs [13]. These two characteristics have been used to design two kinds of FIS. The first kind of FIS to appear focused on the ability of fuzzy logic to model natural language. These FIS contain fuzzy rules built from expert knowledge and they are called fuzzy expert systems or fuzzy controllers, depending on their final use. Prior to FIS, expert knowledge was already used to build expert systems for SIMULINK purposes. These expert systems were based on classical Boolean logic and were not well suited to managing the progressiveness in the underlying process phenomena.

Fuzzy logic allows grading rules to be introduced into expert knowledge based simulators. It also points out the limitations of human knowledge, particularly the difficulties in formalizing interactions in complex processes [14]. Fuzzy inference is the process of formulating the mapping from a given input to an output using fuzzy logic. The mapping then provides a basis from which decisions can be made, or patterns discerned. Simulation diagram and wave forms are shown in Figs. 6–25. Error Calculation: The error is calculated from the difference between supply voltage data and the reference voltage data. The error rate is the rate of change of error [15].

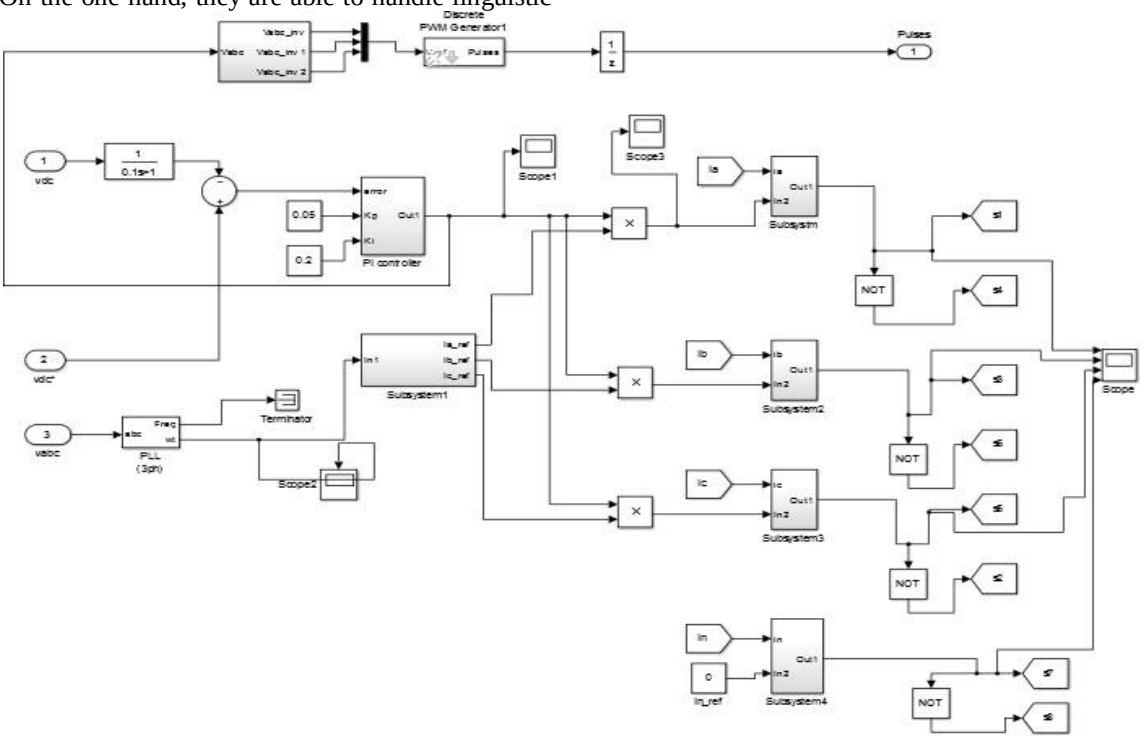

Fig. 6: Simulation diagram for STATCOM with ANN Controller

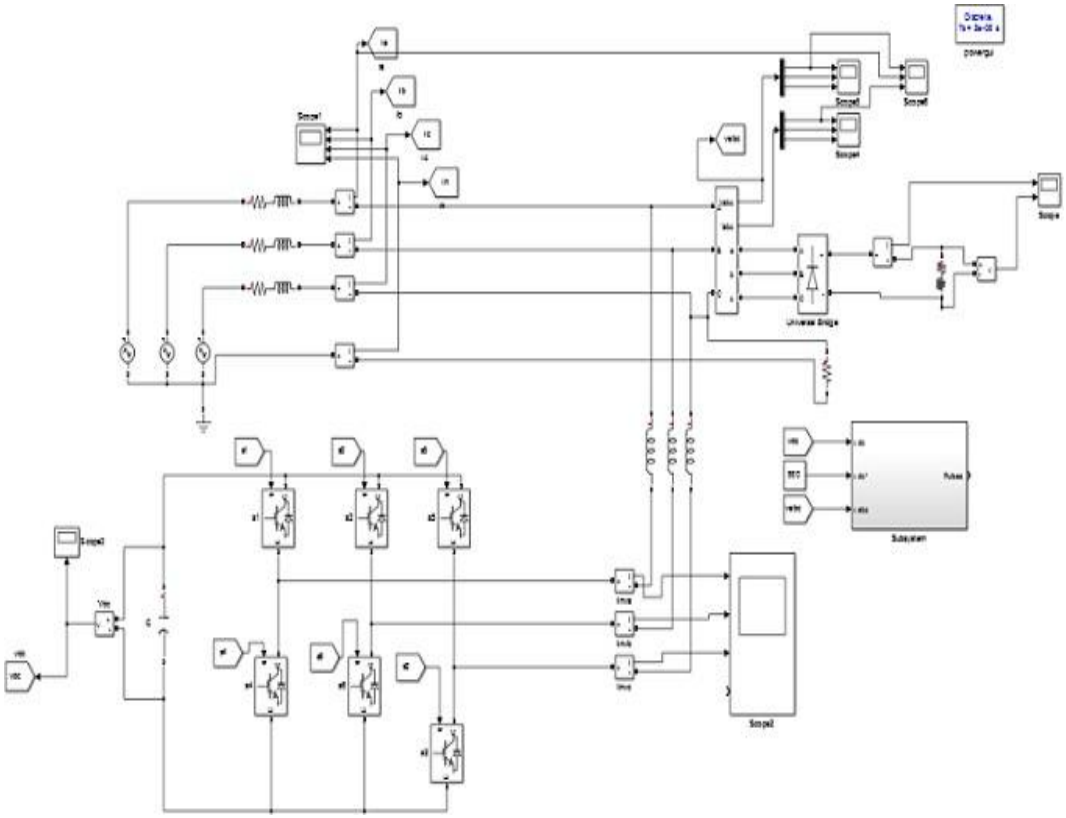

Fig. 7: Simulink diagram for ANFIS subsystem controller

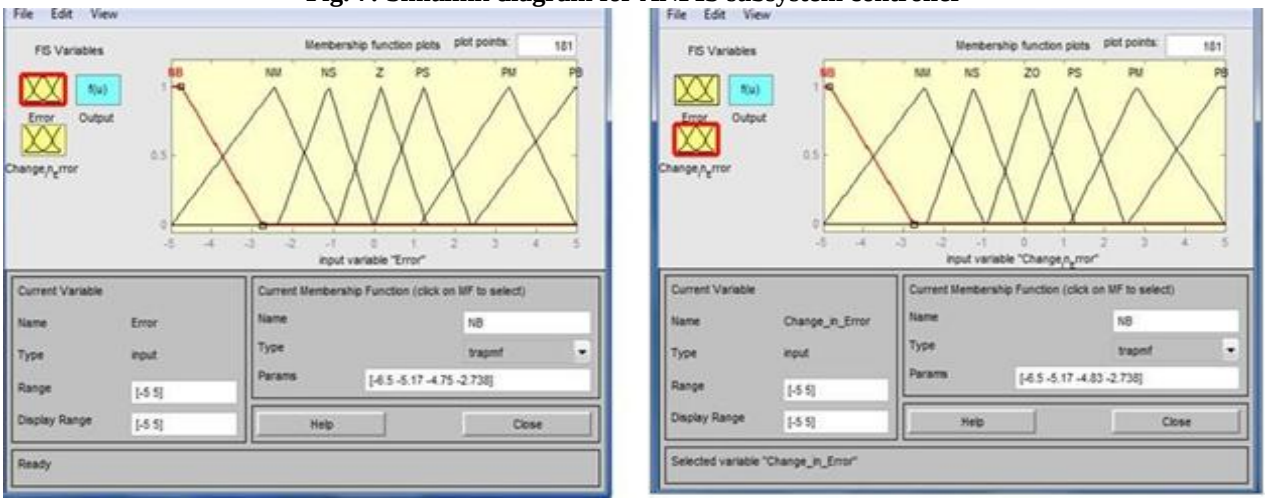

Fig. 8: Input Membership Function for SFC

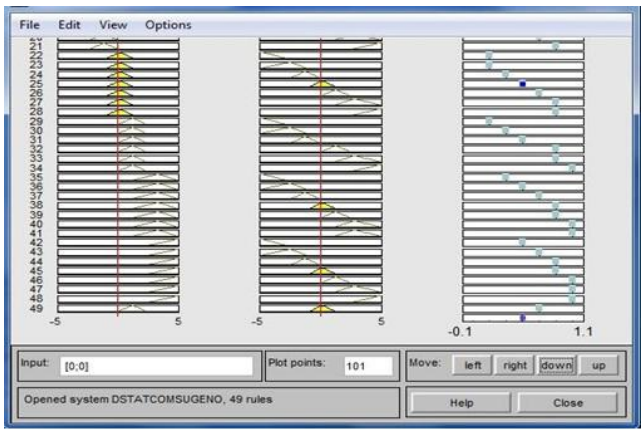

Fig. 9: Rule Viewer of STATCOM with SFC

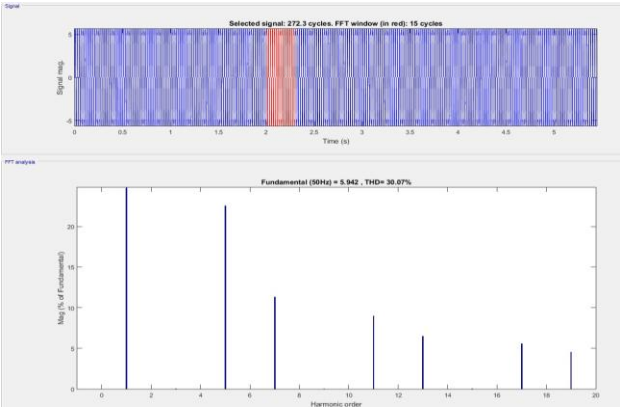

Fig. 10: THD value of ANN

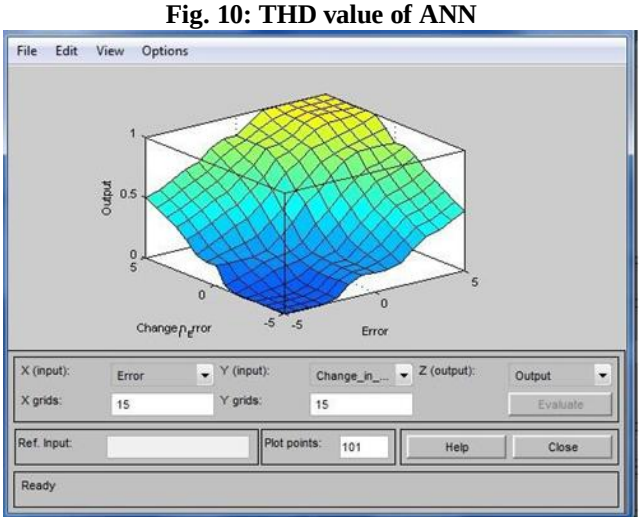

Fig. 11: Surface Viewer of STATCOM with SFC

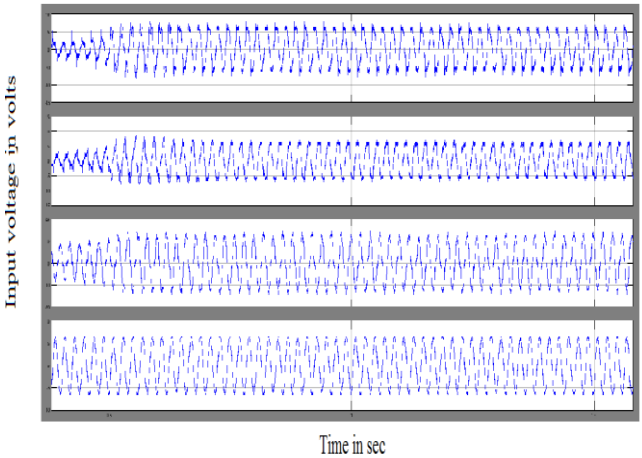

Fig. 12: Wave form of the input voltage

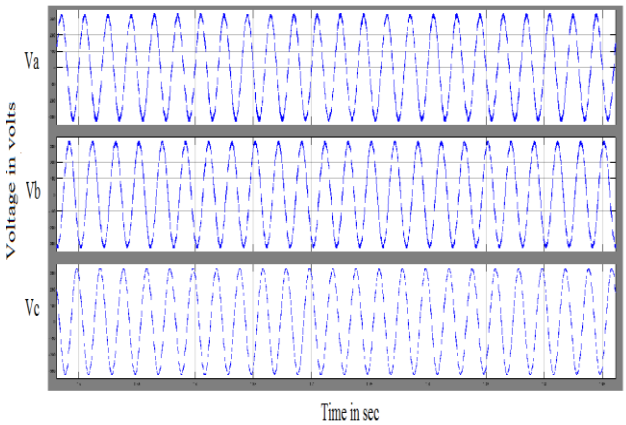

Fig. 13: Wave form of voltage

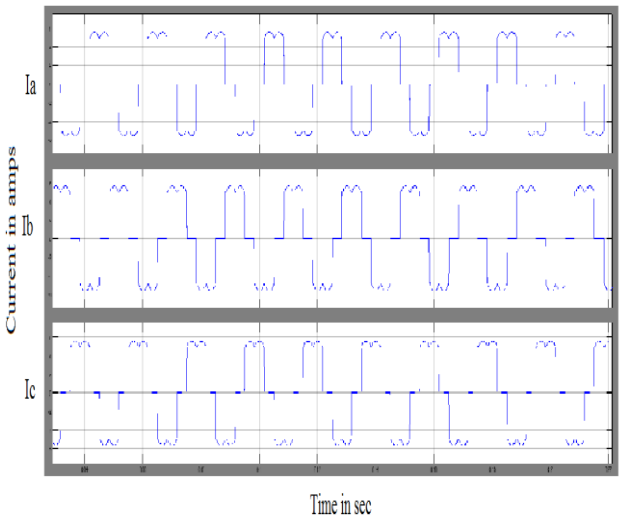

Fig. 14: Wave Form of Current

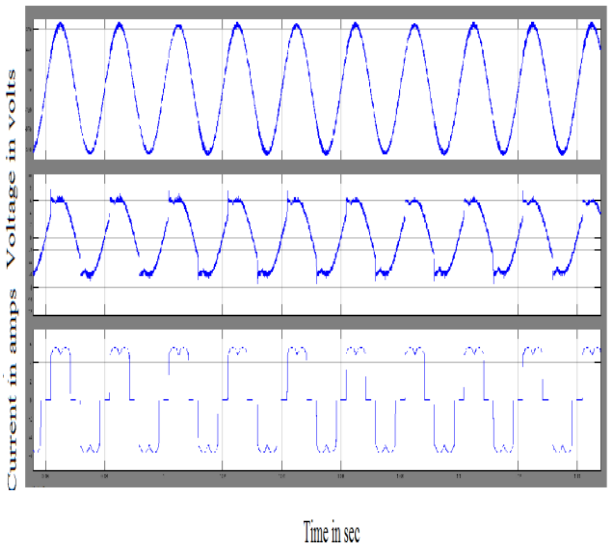

Fig. 15: Waveform of Current and Voltage with STATCOM

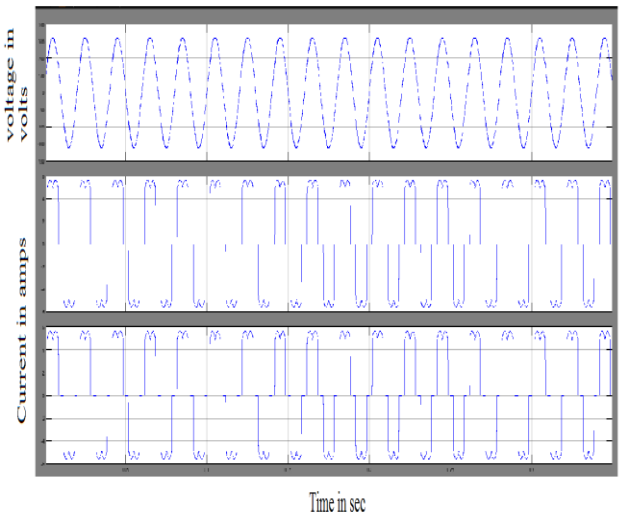

Fig. 16: Wave form for Current and Voltage without STATCOM

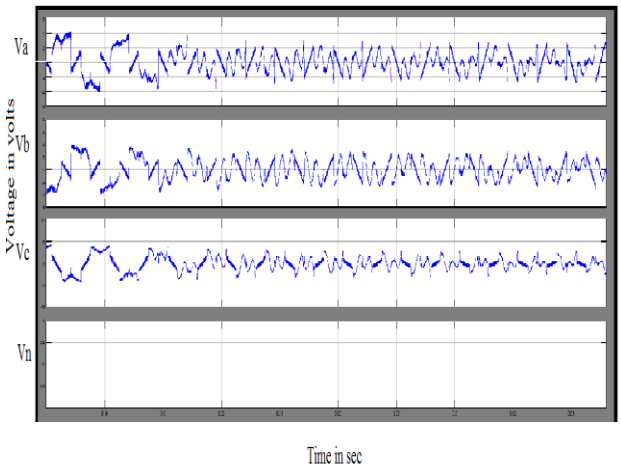

Fig. 17: Wave form of inverter output

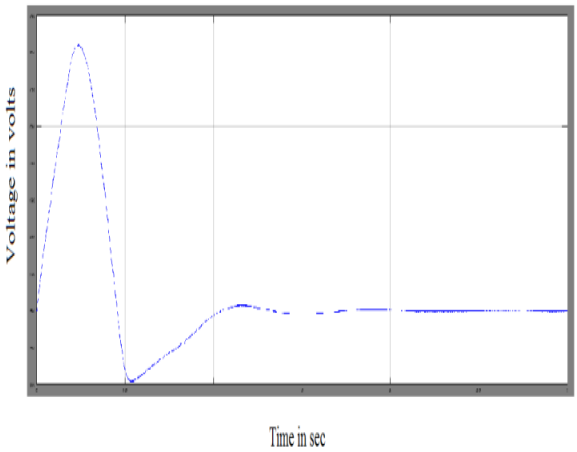

Fig. 18: Wave form ANN Reference Voltage

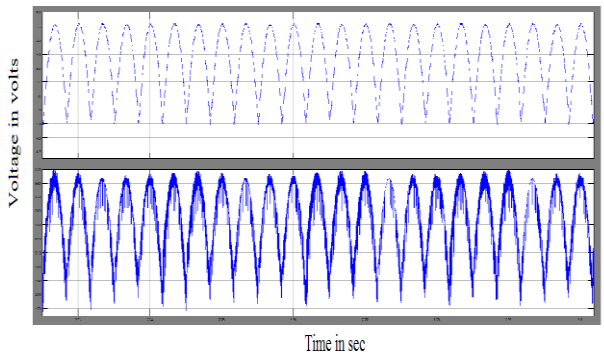

Fig. 19: Wave form Rectifier Output

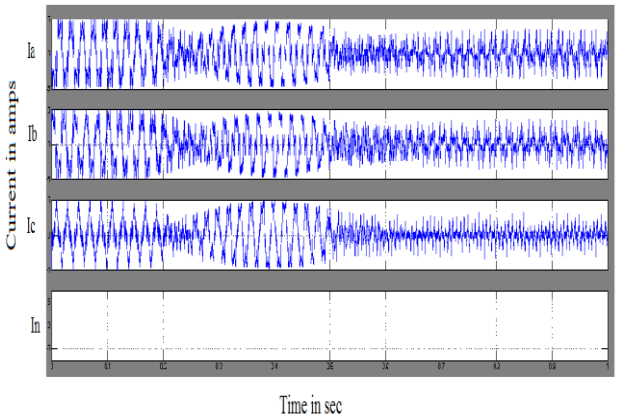

Fig. 20: Wave Form of Shunt Active Power Filter

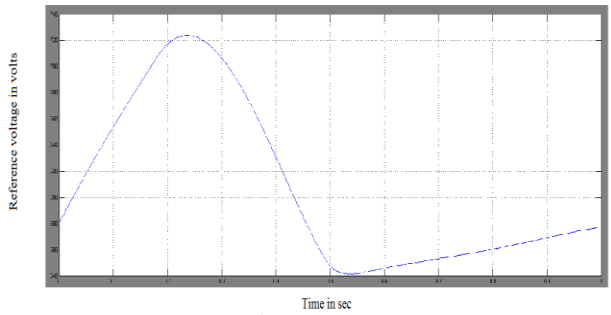

Fig. 21: Wave form of reference voltage

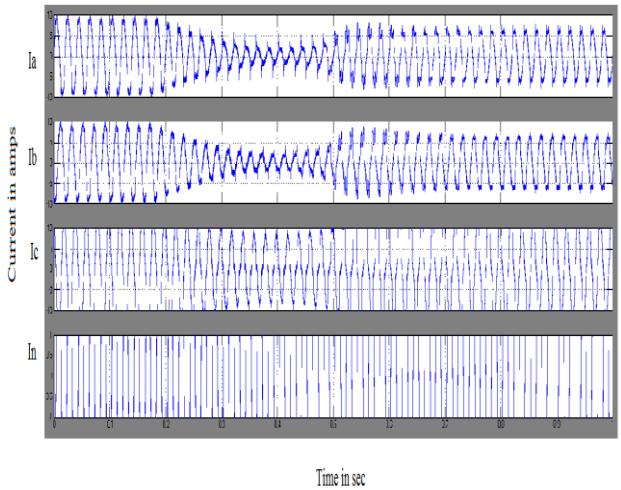

Fig. 22: Wave Form for Series Active Power Filter

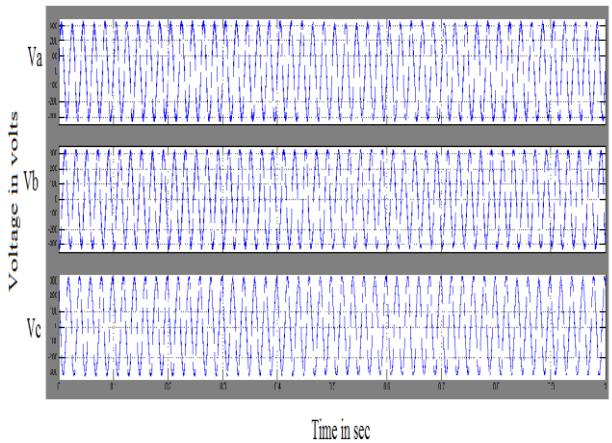

Fig. 23: Wave form of Voltage

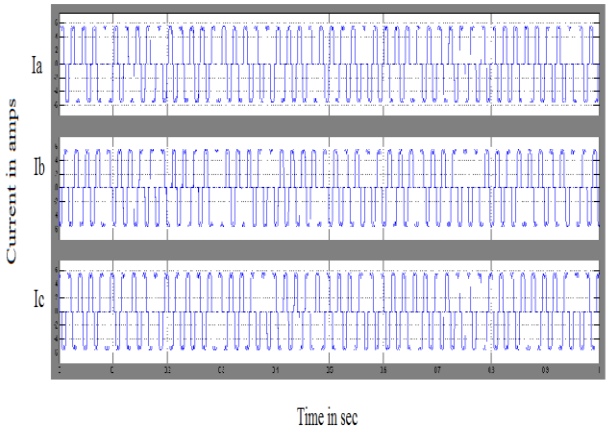

Fig. 24: Wave form of Current

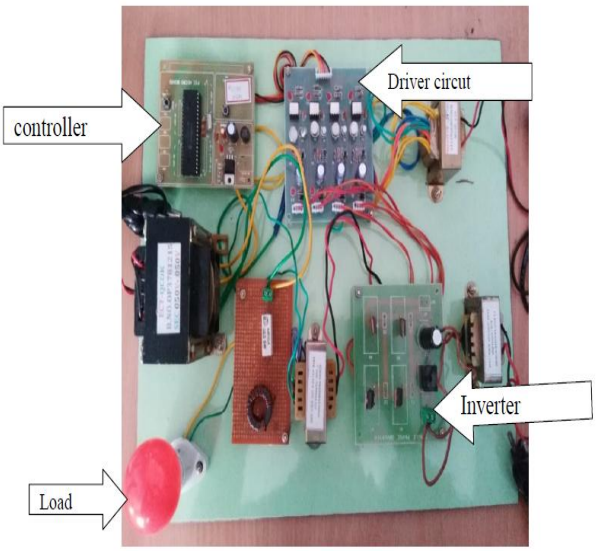

Fig. 25: Experimental Setup for STATCOM

Table I: Results Comparison

Techniques	ANN	ANFIS
Harmonics	6.5%	4.5%
Reactive power	1.5kw	1.15kw
THD	13.07	10.14

IX. CONCLUSION

In order to show the performance of Sugeno-type FIS in STATCOM and a simple distribution network is simulated using MATLAB/Simulink. It can be concluded from this paper that Sugeno-type FIS performs similarly but using Sugeno-type FIS allows the system to attain maximum efficiency output among the power quality. Eventually, the ANN and ANFIS using is best choice to mitigate the voltage sag in distribution system than that of STATCOM because it has better efficiency on voltage mitigation. Thus the output of Sugeno type ANN using STATCOM is 93.55% whereas the ANFIS is 94.60% and the corresponding simulation and hardware results comparison have been done successfully. In future scope advanced controllers are going to be used in STATCOM to attain around 96% of efficiency.

REFERENCES

1. N.G. Hingorani, "Introducing custom power", *IEEE spectrum*, vol.32, June 1995, PP.41-48.
2. N.G.Hingorani and L.Gyugyi, "Understanding FACTS: Concepts and Technology of flexible ac transmission systems", *IEEE Press*, New York, 1999.
3. Mohamed Mohamed Khaleel, and Mohamed Adam Faraj "Modeling and Control STATCOM With ANN And ANFIS For Voltage Sag Mitigation" *2nd International Conference on Emerging Trends in Engineering and Technology (ICETET' 2014)*, May 30-31, 2014 London (UK).
4. Bhim Singh, and Kamal Al-Haddad Senior Member, IEEE, "A Review of Active Filters for Power Quality Improvement" *International Journal of Journal of Power Engineering*, vol. 1, pp. 129-144,2012.
5. Hegazy Zaher, AbdElfattah Kandil and Raafat Fahmy "Comparison of Mamdani/Sugeno Fuzzy inference systems Power Engineering Society Winter Meeting 2002. *IEEE*, volume: 2, Jan 2002, pp-729-734.
6. Pooja S. Shah and Ajit A. Rathod "Power Quality Improvement Using STATCOM with ANN& Fuzzy Logic Controller" *International Journal of Engineering Research and Applications (IJERA)*, pp.1372-1377, 2012.
7. Gupta A., Sharma P.R. "Design and Simulation of Fuzzy Logic Controller for D-STATCOM in Power System," *International Journal of Engineering Science and Technology*. Vol.3. No.10 pp.7815-7822, 2011.
8. Bhattacharay Sourabh "Application of STATCOM Using MATLAB/Simulation in Power System, "*Research Journal Recent Sciences*. Vol.1,pp 430-433, 2012.
9. H. Marefatjou, M. Sarvi, "Compensation of Single-phase and Three-phase Voltage sag and swell using dynamic voltage restorer, "*International Journal of Journal of Power Engineering*, vol. 1, pp. 129-144, 2012.
10. P. Boomchiam, N. Mithulanathan, "Diode-Clamped multilevel voltage source converted based on medium voltage DVR," *International Journal of Electrical power and energy system engineering*, pp. 62-67, Spring.2008.
11. Sumalatha, V. Ramani, K and Lakshmi, K. V. "Fuzzy Inference System to Control PC Power Failures" *International Journal of Computer Applications* Vol. 28, pp.10-17, 2011.
12. S.Deepa, S.Rajapandian, "Implementation of dynamic voltage restorer for voltage sag mitigation," *International Journal of Engineering Science and Technology Computer*, vol.2, no. 10, pp. 5825-5830, 2010.
13. Vinod Khadkikar, Member, IEEE, and Ambrish Chandra, Senior Member, IEEE,"A Noval Structure For 3 Phase 4 Wire Distribution System Utilizing Artificial Neural Network" *International Conference on Advances in Engineering and Technology*, pp. 569-567, 2014.
14. Sung- Min Woo, Dae- wook kang, Woo-Chol Lee, Dong-Seok Hyun, " The STATCOM for Reducing the effect of Voltage Sag and Swell" IECON"01: *The 27th Annual Conference of the*

IEEE Industrial Electronics Society, 2001, pp: 1132-1137.

15. Soo-Young Jung, Tae-Hyun Kim, Seung-II Moon, Byung- Moon Han, "Analysis and control of STATCOM for a Line Voltage Regulation Power Engineering Society Winter Meeting" 2002. *IEEE*, volume: 2, Jan 2002, pp- 729-734.