International Journal of Recent Technology and Engineering (IJRTE)
ISSN: 2277-3878 (Online), Volume-8 Issue-2, July 2019

Automatic Railway Level Crossing System with Embedded Precision Solar Panel using IoT

Francis Densil Raj V, Arul Kumar V, A. Dalvin Vinoth Kumar

Abstract: ***Indian Railways is one of the public transportation modes in the country. It is the largest interconnected rail routes which carry many numbers of people from one end to another end. In this, various level crossings are operated on the rail routes and some of the level crossing gates are operated manually. This process is carried out by getting the information from the previous station once the train left the station. In this process, lots of mishaps are occurring due to human interventions and also there is no safety for road users. This issue can be overcome by making the same process in an automated manner. Hence, in this research work, a new automated level crossing model is proposed using the technology "Internet of Things" (IoT). This model will provide***

Index Terms; Internet of Things, Railway Crossing, Solar Panels

I. INTRODUCTION

India was one of the highly populated countries in the world. And it offers different modes of transportation [1]. Among them, the railway mode of transportation was used by many peoples. That's why it was the fourth largest network in the world and carries an average of eighteen million people per day. Hence, this has created a necessity to construct and extend many numbers of rail routes. Due to this construction, many numbers of the level crossing were created. The railway department faces many challenges while constructing the rail routes. Because they created many level crossing in between the routes and it is a very tedious process to assign a man in each and every level crossing. In each and every level crossing gates placed to control the roadside users and these are operated manually. Even though it was operated by a human some problem will occur due to the negligence and miscommunications. If this operation done by an automation process means many number negligence and miscommunications reduced.

Revised Manuscript Received on 30 July 2019.
***** Correspondence Author
V. Francis Densil Raj, School of Computer Science and Applications, REVA University, Bangalore, India Fourth Author
Dr. V. Arul Kumar, School of Computer Science and Applications, REVA University, Bangalore, India
Dr. A. Dalvin Vinoth Kumar, School of Computer Science and Applications, REVA University, Bangalore, India

II. RAILWAY LEVEL CROSSING

Railway level crossings are the location where a road and railway line intersect at grade (at the same level) allowing road users (including pedestrians and cyclists) to travel over the railway tracks.

Fig 1. Railway Level Crossing

The level crossing is classified into two types

1. Protected Crossings (Manned)
2. Un-Protected Crossings(Unmanned)

A. Protected Crossings (Manned Level Crossing)

These crossings are generally called as public road crossing and also it is called as manned level crossing. It contains traffic lights and either barrier. The barrier or gates are used to avoid the level crossing and it is closed across the road when the trains are approaching, also an alarm rings to warn road users.

Fig 2. Protected Crossing(Manned Level Crossing)

B. Un-Protected Crossings (Un-Manned Level Crossing)

This crossing is also called as unmanned level crossing. In this, road user should be very careful while crossing. There are many signboards were displayed to show how to use the crossing safely. In this, there is an insufficient sighting of approaching trains and the only way for alerting the road users is a sound horn blown from the train when it approaching the level crossing.

Fig 3. Un-Protected Crossing(Unmanned Level Crossing)

III. Literature Review

In the past literature, many automated systems were developed to avoid the mishaps in the level crossing. Wang et al., [2] proposed an automatic control system for the level crossing. In this methodology, they used magnetic sensors to detect the motion of the trains. This system was more expensive. Kottalil et al [3] proposed an improved safety mechanism to at the railway crossing. In this mechanism, they used microcontrollers and the InfraRed sensors. The sensors are used to monitor the trains for the gate operations.

Mahdi et al [4] developed an automatic control mechanism for the gates situated at the level crossing. In this mechanism 8052 microcontrollers. They developed this mechanism to avoid the collision or accidents at the level crossings. The train arrival is identified using the two sensors placed on both the sides of the gates. Based on the sensors data the level crossing gate operation was processed without any human intervention. Chellaswamy et al [5] developed a new system for the gate operation at the level crossing. In this, the researchers used two important technologies GPS and GSM. The proposed system shows better result and this has a drawback that this mechanism only detects the trains having this GPS and GSM systems. Shahida et al. [7] analyzed the performance degradation issues regarding PV(Photovoltaic) solar plant. This paper discussed the failure of the solar plants in real time environment. et al. suggested continuous monitoring the plants and quality panel manufactures are helped to achieve the better performance. Jinshan et al. [8] proposed the method to maximize the utilization of solar energy production by placing the plant into a compute shade area. The author discussed the importance of shading in safety and profit maximization. The proposed mathematical model calculate the maximum shaded area in the allocated land this system helped to achieve the better result. Frank et al. [9] proposed a method for forecasting solar energy based on weather conditions. Predicting the solar energy leads to maximum utilization of resources and efficient management. This paper discuss the impact of machine learning in predicting result by using sensor and public weather data. Manh et al. [10] proposed an IoT based system for manage and control the energy produced by solar plants. Solar tracker introduced for energy management. Role of IoT in this system to control the micro grid. Begumet. al [11] compare the methodologies used in solar power plants and discussed the IoT based data analytics to improve the performance of solar plants. For maintaining the power production rate the system will be divided into 2 phases O&M (Operation Maintenance and SCADA (Supervisory control and data acquisition) this is done with the help of IoT (Data Collection) devices and cloud (Data Storage). Table 1 shows various IoT techniques used in smart applications.

TABLE 1 : IoT Techniques and Applications

Author	Technique	Application
PD Sheba et. al. [12]	Overhead Reduction	IoT Routing
Carvin et. al. [13]	Scheduling	Cloud
Hubert et. al. [14]	Fuel Monitoring	IoT Petrol Tank
Dalvin et. al. [15]	QoS	IoT Routing
Santiago et. al. [16]	Energy	IoT Networking

IV. Proposed System

In the existing system, the researcher used only one IR sensor to detect the trains. But it can also detect other intervention like human, animals and other objects. In this, instead of the train,

the sensors detect some other intervention means the gates start closing at the level crossing. But it should not have happened and it will create a lot of problems for the road users. For this, a new mechanism is proposed to overcome the disadvantage and to improve the safety in the automated level crossing mechanism.

The proposed mechanism contains four Passive Infrared (PIR) sensors PIR1 &PIR2 and PIR3 & PIR 4 are placed at both the sides of the gates. The PIR 1 & PIR 2 sensor placed at a distance of X km and PIR 3 & PIR 4 sensor at Y km and the threshold time between the sensors is fixed as T and T1 minutes. If both the sensors are activated within t minutes the signal sent to the servo motor for closing the gates at a level crossing or else the gates remain open because some other obstacles activate the first sensor or the train stopped before the second sensor and it is represented in figure 4. The train crosses the level crossing within the threshold time X1 and Y1 sensor gets activated. If it is no activated the gates remain closed or else the signal send to the servo motor for opening the gates and provide paths to the road users and it is shown in figure 5.

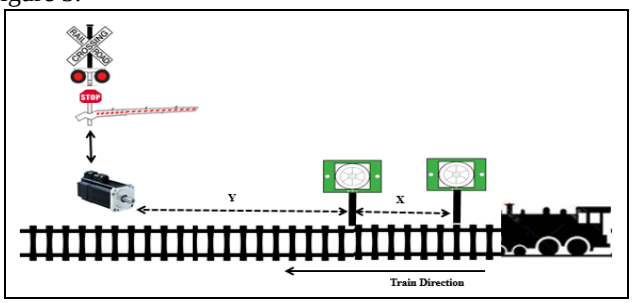

Fig 4. Before Level Crossing

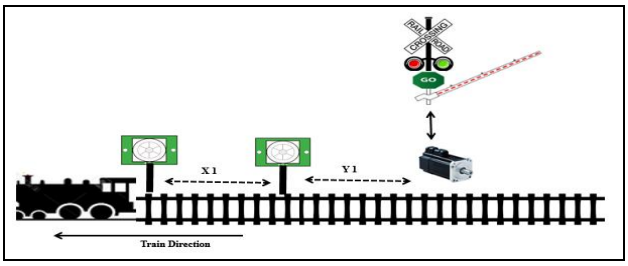

Fig 5. After Level Crossing

A. Circuit Diagram for the Proposed Model

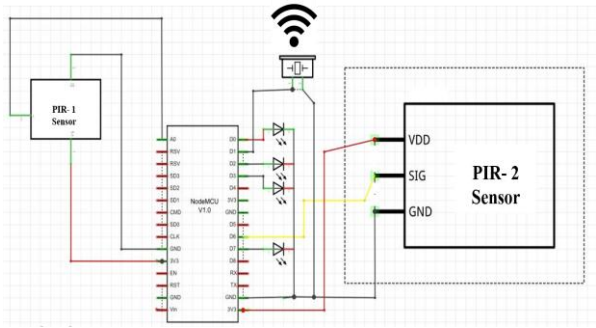

Component Description

Passive Infrared Sensor (PIR)

The PIR sensor is used to detect the motions. PIR sensor is made up of pyroelectric sensors and it can detect the infrared light radiated by the warm objects. The range of the sensor is 10 m. The PIR sensor contains 3-Pin connection in that One pin for the power, another pin for the signal and the last pin for the ground. The motion can be detected through the signal I/O pin. The following figure 5 shows the circuit diagram for the sensor.

NodeMCU

It is an IOT development kit and an open source firmware developed for ESP8266 wifi chip. This kit mainly helps to develop a prototype for the various IOT products. The kit can be reprogrammed according to the user needs with the help of various scripting languages like LUA scripting language, and Embedded C and this reprogramming can be done after flashing the kit. NodeMCU contains various components like inbuilt wifi chip (ESP8266), USB to UART converter, Voltage regulators, Status LED, MicroUSB port, Reset/Flash buttons, and GPIO pins. The following figure 6 represents the NodeMCU.

Servomotor

It is an electrical device which is used to rotate or push an object. it is comprised of four different things namely a normal DC motor, a gear reduction unit, a position-sensing device, and a control circuit.

B. Work Flow for the Proposed Model

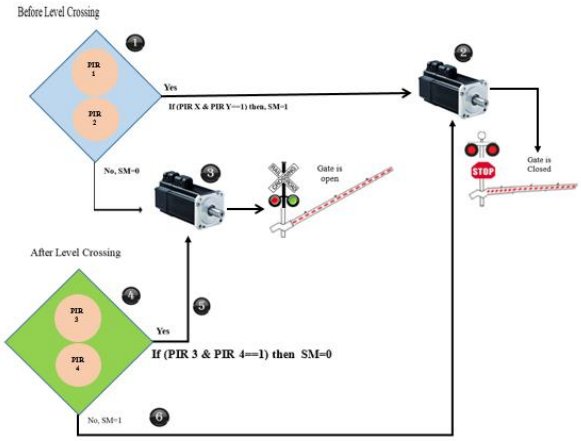

Fig 6. Work Flow of the Proposed Model

Step 1 : Before the Level Crossing, The train was detected in ***PIR 1*** & ***PIR 2*** at a distance ***X*** km and ***Y*** km with the threshold time ***T***

Step 2 : The *PIR 1* and *PIR 2* value is 1, Signal Sent to Servo Motor to close the gates.

Step 3 : The *PIR 1* and *PIR 2* value is 0, Signal Sent to Servo Motor, to open the gates

Step 4: : After the Level Crossing, The train was detected in ***PIR 3*** & ***PIR 4*** at a distance ***X1*** km and ***Y1*** km with the threshold time ***T1***

Step 5 : The *PIR 1* and *PIR 2* value is 0, Signal Sent to Servo Motor, to open the gates

Step 4 : The *PIR 3* and PIR *4* value is 1, Signal Sent to Servo Motor to close the gates.

Solar panel will be embedded with IoT device which we call it soliot, Device is built with simple Bluetooth based communication system [8]. Along with internal memory to store when it is not connected to device like cache mechanism. Following Fig (7) Define the important parts of device, this device is build with simple processing power. As its only job is to fallow instruction which is received through Bluetooth, and to pass information/data back to mobile device.

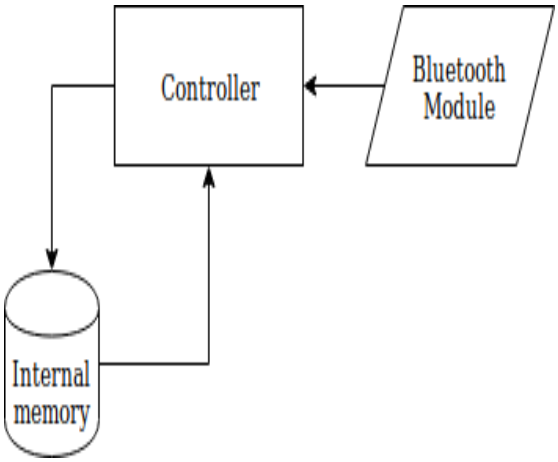

Fig 7: The phases of the device

Mobile Device with Android Application

Android application will have 2 different views as a normal user and admin, app is used to collect data from IOT device through Bluetooth connection, and it does use internal memory storage for storing data temporarily if device is offline, on device is online data will be pushed to cloud, there will be small processing her and data encryption algorithms running, app also provide features like 1) Event and other future planning dates, 2)View of graphs on energy consumption and expected production, 3) And other Authentication screens

Cloud with Prediction and data analytic process

Here we are consuming the data which is produced by IOT device, mobile device and generating actual predicted results, Things we are considering for prediction are 1) IOT Device data from solar panel 2) Mobile Device application data (User event scheduled data) 3) Weather forecast information, These three data are our main variables for regression analysis.

Regression analysis is a strong statistical method, which allows the study of the association among two or more different variables. There are many types of setback analysis, and in their core center they become a dependency of one or more independent variables as shown in figure 8. This line is referred to as your regression line, and it can be calculated precisely using a static point program such as Excel.

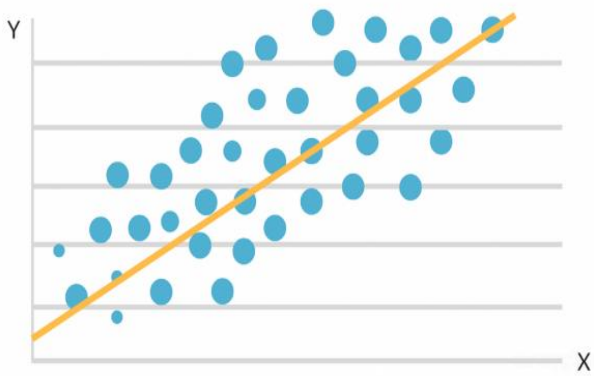

Fig 8: Regression Line

We will use a theoretical diagram that explains how the regression line should be.

In the equation Y = a + bx, Y is the dependency variable (the variable returns to the y axis), X is the independent variable (ie it is scheduled on the X axis), b line and a y-intercept.

$$a = \frac{(\sum y)(\sum x^2) - (\sum x)(\sum xy)}{n(\sum x^2) - (\sum x)^2}$$

$$b = \frac{n(\sum xy) - (\sum x)(\sum y)}{n(\sum x^2) - (\sum x)^2}$$

Based on results generated using regression analysis we will send information back to mobile device with certain instruction in json format.

Web portal

The web portal is admin portal and normal user portal together, we use this portal to View data prediction in graphs and other visualization formats, Admin view is provided with access rights to stop the complete system. 1) admin can manage users 2) Grant permission of view and edit access 3) collaborate decisions on date of events, Web portal provide information regarding upcoming events and how much solar energy can be used for it, based on the event date scheduled and predicted energy production user will be prompted with proper information weather it is possible to cover complete event with existing solar or need an additional batteries or backup. System will predict the consumption of energy on event, based on the information provided about event in web portal or mobile device which includes like hours, extra lights fans any other devices which can be connected.

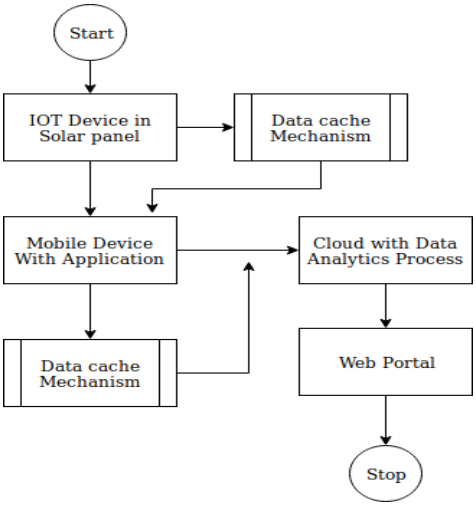

Fig 9: The flow of data in the system

The above figure 9 shows the flow of data in the system, which start from IOT Device and till Web portal, this figure showing one side flow of data, the decisions will be predicting by considering the data coming from iot device, The same system work will work in reverse order sometime. when input instruction given from web portal about event, cloud will send instruction to iot device for increasing the production. And some time when instruction is given from web portal or mobile for discharging the power. iot device will help us do it by following the instruction. Discharging mechanism is built keeping natural dissenters in mind which might cause batteries and stored power to blast. So system will allow to discharge.

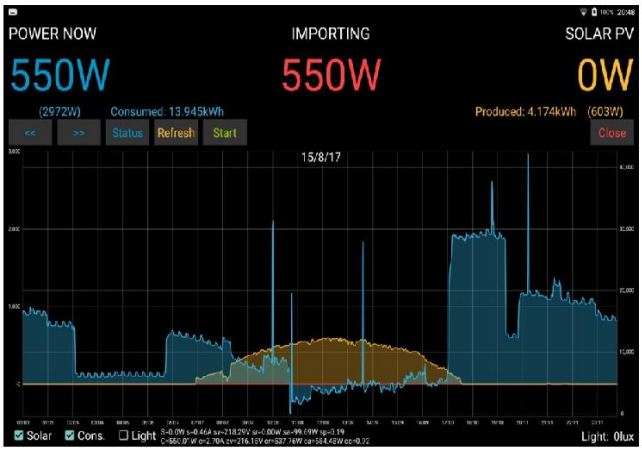

Fig 10: Graphical representation of web portal result 1

Fig 10 is the screenshots of results from web portal, as discussed results are shown in graphical representation and user has provided with easy user interface to interact with system. Portal is build keeping acceptability in mind so that users with disability can have easy access.

Android App

The following figure 11 shows the screenshot of android app result. Even android app was built with accessibility feature.

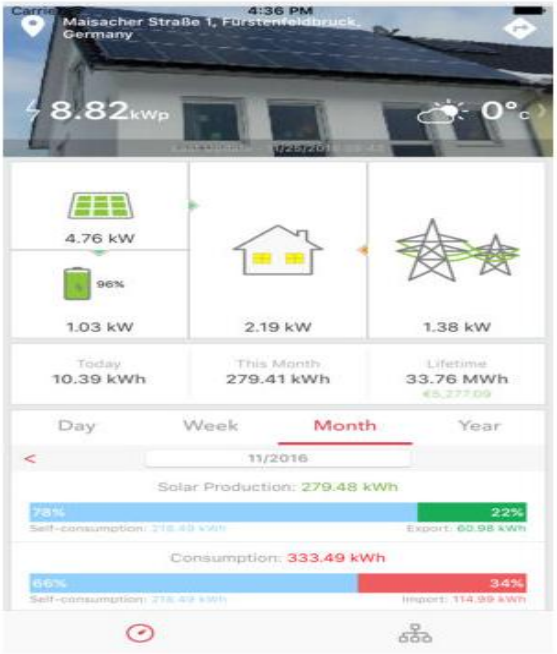

Fig 11: Android Application Result

V. Conclusion

In railways, the level crossing gates are controlled manually. Due to some miscommunication, many accidents occurred in the level crossings. For this issue different solution was found using the IoT concepts. And one such solution is controlling the gates in an automatic manner. Different models were developed using the same idea. The existing models contain many disadvantages and it should be improved. Hence in this research, an enhanced automatic gate control model is proposed. In this model, a new idea is implemented using PIR sensors and this model provides an efficient automatic gate controlled system. Finally, our proposed model will definitely avoid many accidents and gives better safety to the road users at the level crossing.

REFERENCES

1. Bharath Kumar Reddy, Sharath Kumar Reddy, Ravinder Reddy,Navya, "Safeguard of Railway Crossing Using IoT", Journal of Telecommunications System & Management, Volume 7 Issue 2, 2018,pp 1-3
2. Chandrappa S, Dharmanna Lamani, Shubhad Vital Poojary, Meghana N U, " Automatic Control of Railway Gates and Destination Notification System using Internet of Things (IoT)", International Journal of Education and Management Engineering, Volume 5, 2017, pp. 45-55
3. Xishi Wang, Ning Bin , and Cheng Yinhang. A new microprocessor-based approach to an automatic control system, International Symposium on Industrial Electronics, pp. 842-843, 1992.
4. Acy M. Kottalil, Abhijith S, Ajmal M M, Abhilash L J,Ajith Babu. Automatic Railway Gate Control System, International Journal Of Advanced Research In Electrical, Electronics and Instrumentation Engineering, Volume 3, Issue 2, February 2014.
5. Ahmed Salih Mahdi, Al-Zuhairi. Automatic Railway Gate and Crossing Control based Sensors and Microcontroller, International Journal of Computer Trends and Technology (IJCTT) Volume 4 Issue 7 July 2013.
6. C.Chellaswamy, Srinidhi Srinivasan, R Ramesh Babu. A Humanitarian Intelligent Level Crossing Controller Utilizing GPS and GSM, 2014 IEEE Global Humanitarian Technology Conference- South Asia Satellite (GHTC-SAS) September 26-27, 2014. Trivandrum.

7. Begum, Shahida& Scholar, Research &Vtu, Belagavi&BanuSmieee, Reshma&Ahammed, Ali & B D, Parameshachari. (2018). Performance Degradation Issues of PV Solar Power Plant. 10.1019/ECCE.2011.6064096.
8. Jinshan Xu, ShaocongGan, Song Li1, ZhongyuanRuan, Shengyong Chen, Yong Wang1, ChangguiGui and Bin Wan,"Dish layouts analysis methodfor concentrative solar power plant",SpringerPlus (2016) 5:1850DOI 10.1186/s40064-016-3540-3.
9. Kraemer, Frank &Ammar, Doreid&Bråten, Anders &Tamkittikhun, Nattachart& Palma, David. (2017). Solar Energy Prediction for Constrained IoT Nodes Based on Public Weather Forecasts. 10.1145/3131542.3131544.
10. M. D. Phung, M. De La Villefromoy and Q. Ha, "Management of solar energy in microgrids using IoT-based dependable control," 2017 20th International Conference on Electrical Machines and Systems (ICEMS), Sydney, NSW, 2017, pp. 1-6. doi: 10.1109/ICEMS.2017.8056441.
11. Begum, Shahida&Banu, Reshma&Ahamed, Ali & B D, Parameshachari. (2016). A comparative study on improving the performance of solar power plants through IOT and predictive data analytics. 89-91. 10.1109/ICEECCOT.2016.7955191.
12. A. Dalvin Vinoth Kumar, PD Sheba Kezia Malarchelvi, and L. Arockiam. "CALDUEL: Cost and Load overhead reduction for route discovery in LOAD Protocol." Advances in Computer and Computational Sciences. Springer, Singapore, 2017. 229-237.
13. Carvin, L. B., Shanthan, B. H., Kumar, A. D. V., & Arockiam, L. Role of Scheduling and Load Balancing Algorithms in cloud to improve the Quality of Services. International Journal of Computer Science, 5(1), 1454-1462.
14. Shanthan, BJ Hubert, A. Dalvin Vinoth Kumar, and L. Arockiam. "Filling Fuel Quantity Measurement Systems Using Internet Of Things." International Journal of Innovative Research and Advanced Studies 3.13 (2016): 152-154.
15. Kumar, A. Dalvin Vinoth, and L. Arockiam. "TOPQoS: TENSOR Based Optimum Path Selection in Internet of Things to Enhance Quality of Service.", 2017, pp. 1-7.
16. Santiago, S., A. Kumar, and L. Arockiam. "EALBA: Energy Aware Load Balancing Algorithm for IoT Networks." Proceedings of the 2018 International Conference on Mechatronic Systems and Robots. ACM, 2018.

AUTHORS PROFILE

Francis Densil Raj V is presently working as Assistant Professor in REVA University, Bangalore, India. His thirst area of Research spreads towards Networks and IoT. He is having more than 5 publications in indexed journals. Now he is working with Routing Algorithms in IoT.

Dr. V. Arul Kumar is working as Assistant Professor in School of Computer Science & Applications, REVA University. He completed his doctoral degree in Computer Science from Bharathidasan University-Tamil Nadu. He has completed M.Phil in Computer Science from Bharadhidasan University, Tamil Nadu. He has 7 years of experience in research. He has published more than 25 research articles in the various International / National Journals and conferences. His research area includes data Mining, cloud security, and cryptography.

Dr. A. DalvinVinoth Kumar is working as Assistant Professor in the Department of Computer Science, Kristu Jayanthi College Bengaluru, Karnataka, India. His research interests are: MANET, Routing and IoT.