International Journal of Recent Technology and Engineering (IJRTE)
ISSN: 2277-3878 (Online), Volume-8 Issue-2, July 2019

Topology Optimization: An Effort to Reduce the Weight of Bottom Centre Pivot

Prashant Kumar Srivastava, Simant, Sanjay Shukla

Abstract: ***For the growth of any nation, revenue generation is prime concern. Indian railway majorly freight movement plays a vital role in this regard. Focusing on increasing carrying capacity, weight reduction of bogie and its components become prime concern. This requires existingdesign improvement of critical components. In present research work topology optimization is carried out for the design alteration of bottomCentre Bearing plate i.e. Centre pivot using ANSYSinterface. Centre Bearing Plate, an integral component of three piece freight bogie, it balances and transfer various forces generated during motion of the vehicle. Pseudo-density(ρ_e) are the design variables assigned to each finite element changes from 0 to 1, $\rho_e \approx 0$ represents for removing of the material and $\rho_e = 1$ represents for retention of the material. Further, design is modified according to the result obtained from iteration performed by FEA tool, resulting approximate weight reduction6.23%.Natural frequencies and their respective mode shapes of initial and modified designs are compared to validate the topology of the designs.***

Key Words:Three piecefreightbogie, BottomCentreBearing Plate, Pseudo-density, Weight Reduction, mode shape.

I. INTRODUCTION

Indian railway is backbone of the transportation system. Energy savings is important for production as well as transportation system, can be achieved primarily with developing light weight vehicles. Reduction of small amount of the weight of bogie components(s) results into enormous savings in terms of energy and material as well as increment to pay load.The weight and strengthare always critical design parameter for rail vehicle designers. Topology optimization is being performed to modify theexisting design Bottom Centre Bearing Plate considering volume and weight reduction as objective function for visualizing most favorable material distribution inside the selected design space.

In present work, bottom centre pivot a critical bogie componentof three piece fright bogie is considered for optimization.A railway freight vehicle having three piece freight bogies(shown in Fig.1a) consists of side frames, bolster and bottom centre pivot as shown in Fig.1(b).

Solid model of the initial design is developed in NX-7.5 interface.

Revised Manuscript Received on 30 July 2019.

***** Correspondence Author

Prashant Kumar Srivastava*, Department of Mechanical Engineering, Ambalika Institute of Management & Technology, Lucknow India

Simant, Department of Mechanical Engineering, Sagar Institute of Technology & Management, Barabanki, India

Sanjay Shukla, Research Design and Standards Organisation, Ministry of Railways, Government of India, Lucknow, India

Further the model is used for optimization process using Topology module of ANSYS platform applying load and boundary condition as per International Standard of Association of American Railroad (AAR) M-202[1].The details of bogie fitted bottom CentrePivot shown in Fig. 2.The existing bottom centre pivot is designed for Indian Railways operating and loading conditions. Centre Pivot connects the rail car body and the chassis of bogie.

It balances and transferred various forces generated during vehicle motion. In addition, the bolster platform is connected to a transom of the bogie chassis.Centre Pivot facilitates thecurve negotiationof vehicle at higher speeds. It bears5%ofsuperstructureweightand50%ofpay load along with various forces like brakingand tractiveforces.

The optimizationof any engineering problem is basically the maximization or minimization of an objective function [2] subjected to given constraints. Stress constrained [3]volume minimization is our target work. Optimization of mechanical structures can easily be traced back to the start of 20th century when Michell [4] derived formulae were used for structures tominimize weight under stress constraints.

Fig. 1(a): Freight vehicle havingthree piece bogies

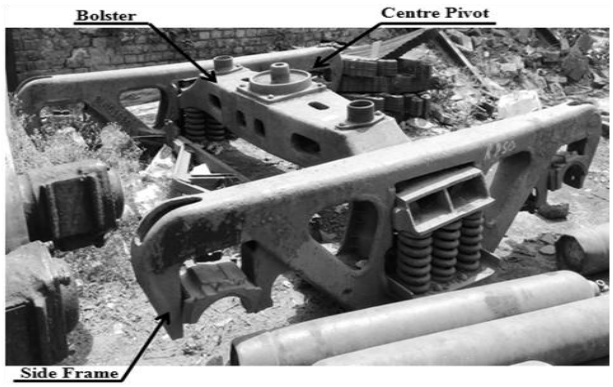

Fig. 1(b): Three piece freight bogie components

The development of topological optimization can be majorly credited to Bendsoe and Kikuchi [5] & [6];

they presented a homogenization based approach of Topology Optimization. Mathematical optimization procedures are applied to structures by Save etal.[7] .The state of structure is described by means of generalized loads, displacements, stress and strains. They resulted that the final structures had the minimum compliance for respective volume structures. Optimal material distribution in the shape design of structures is explained by Bendsoe [8]. Artificial density is considered as design variables and particular weight is assigned to these densities for filtering in between 0 to 1.The regions with dense cells having higher density numbered as 1 defined as structural shape, and those with void cells numbered as 0 having undesired material considered for removal

Garget al. [9] explained a 22degree offreedom freight vehicle dynamics model which was developed by Tse and Martin. The complexity of model was reduced by simulating while neglecting dynamic response of bolster and considering fundamental non linearity associated with centre plate separation, side bearing contact, wheel lift and friction damping. They explained the calculation of vehicle response time history for cross level variation. Theyalso concludedthat thesome parameters viz. centre of gravity,height and critical speed was inversely proportional to eachother.

Park et al. [10]developed a model of Korean passenger vehicle bogie frame for fatigue constraint weight optimization. Finite Element (FE) methods were usedto evaluatefatigue strength of bogie frame. Further 4.7%weight ofbogie frame was reduced through Genetic Algorithms (G.A.).

Shukla et al. [11] developed a Multi body dynamics model of CASNUB freight bogie to improve riding of the vehicle performing parametric study of suspension elements.

Kim et al. [12] performedexperimental structural analysis ofKorean tilting train bogie bolster by means of two ways i.e. static and fatigue loading test. The safety against fatigue was checked using Goodman diagram of the material used.

Li et al. [13] emphasized on the safety of bogie frame of Beijing subway vehicle under overload situation. Nominal stress method and Goodman relation were used for fatigue strength evaluation. The experiment and fatigue analysis results had suggestedthe weak location for failure under gearbox bracket.

Tang et al. [14]evaluatedstatic and fatigue strength of Diesel Multiple Units (DMU) bogie frame with Goodman plots. As there was no high-frequency vibration in running condition of trains, so modal analysis of the bogie frame were performed in free or no load conditions. Thereal operational constraints of the design were checked. It was experienced that stress amplitudes were less than fatigue limit, which implies that bogie frame fulfill the requirements of fatigue strength.

Bubnov et al. [15] focused their work on casted CASNUB bogie parts i.e. side frame and bolster on axle load of 245 kN. They found that side frame and bolster was most stressed part of the bogie. Structural analysis was performed on the basis of allowable stress and the safety factor of fatigue strength. Experimental investigation and theoretical analysis provide confirmation to the selected bogie for future use.

Shukla et al. [16] developed a finite element model of CASNUB three piece freight bogie frame. Transient analysisof the bogie frame was performed to calculate the fatigue strength. MATLAB platform was used to reduce the weight of the bolster fitted bottom centrebearing plate.

Prashant et al.[17] reduced the total volume of mechanical component using ANSYS software on the same von-Mises stress constraint of given load. The total volume of component was reduced by 22.5% and best design set of dimensions was acquired.

In the Hyper works Technology Conference, Varun Ahuja et al. [18] discussed about topology optimization procedure on Opti-structsoftware platformto reduce the weight of Engine Mounting Bracket and concluded 15 % weight saving. M.V.Aditya [19] has reduced the weight of engine mounting bracket by40% without compromising the strength by topology optimized designM. Naveen et al.[20] optimizedthe CASNUB bogiedesign through approaches of size and shape optimization suggests some changes in the design so as to enhance the strength of the bogie without reducing payload carrying capacity. Various structural optimization methods have briefly explained by Prashant et al. [21]on size, shape and topology optimization.

Fig.2: Bottom Centre Bearing Plate

II. METHODOLOGY

The weight reduction of bottom central pivot is achieved by stress constraint topology optimization [22]. The objective function is the volume of the bottom centre pivot. Pseudo-Density (ρ_e) is the design variables assigned to each finite element ranges from0 to 1.

More elaboration of design variables can be written as

$\rho_e \approx 0$, represents the remove of the material,

$\rho_e = 0$ to 0.4,suggests removal of the material,

$\rho_e = 0.4$ to 0.6,suggests marginal retention of the material,

$\rho_e = 0.6$ to 1 , suggests preservation of the material

The topology optimized model is obtained after performing iteration by ANSYSinterface[23]. The weight of the bottombogie centre pivot is optimized and initially reduced by 8.60%.

Equation (1)shows a stress based topology optimization. The problem isformulated to minimize volume as well as weight of a given designspaceunder von-Misesstress constraint. The failure theoryof this constraint optimization state that "A material will not sustain if the von-Mises stressinduced in the material exceeds yield strength". It means that for safe design von-Mises stress is always less than the yield stress of the material.

$$\text{Min } V(x) = \sum_{e=1}^{N} (\rho_e)^P v_e \ldots\ldots\ldots\ldots\ldots\ldots\ldots\ldots(1)$$

$$\text{Subjected to :g } (\rho_e) = \frac{\sigma^{vms}}{\sigma^{yield}} < 1$$

$$KU = F$$

$$0 < \rho_{min} \leq \rho_e \leq 1$$

Here,V is the volume (objective function), N is total number of elements which defines the design space,e iselements within the design space,$v_e$is volume of each element in the design space, σ^{vms} isvon-Misesstress (Constraint), σ^{yield} is maximum yield stress P is penalization factor. K is global stiffness matrix, U is global displacement vector, F isglobal force vector, $\rho_e$is pseudo-density (design variable), ρ_{min} is the minimum pseudo-density to control thesingularity phenomenon associated with the design variable.

III. STRUCTURAL ANALYSIS OF INITIAL MODEL

Structural analysis of a freight car bottom centre pivot has been performed using the finite element method for various loading and boundary conditions for 25 ton axle load. The drawing of the initial bottom central pivotdesign is shown in Fig.3 is used to developsolid model using UGS NX-7.5 interface [24]. The model is meshed by adaptive procedure having 11578 nodes and 6651 elements. Load cases and boundary conditions proposed according to International Standard of AAR M-202shown inFig. 4. The casted steel recommended material properties [25] used for FE analysis [26] shown in Table 1. Critical stress zones are shownforinitialdesign. The magnitude of stress and deformation at critical zones of initial designfor applied load cases are listed in Table 2. Further Load Case (F_1&F_2i.e. maximumapplied loads) on Centre Pivot is chosen for analysis and optimization work.

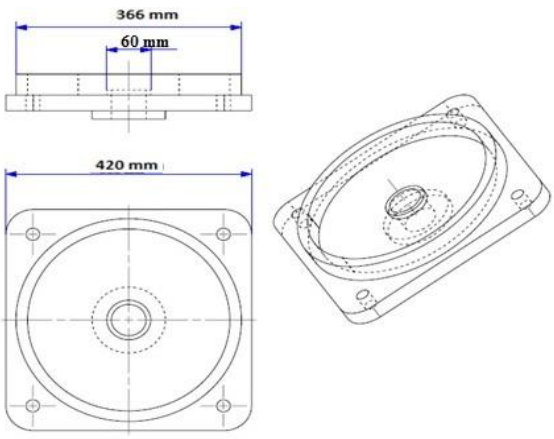

Fig. 3:Drawing of Bottom Centre bearing plate

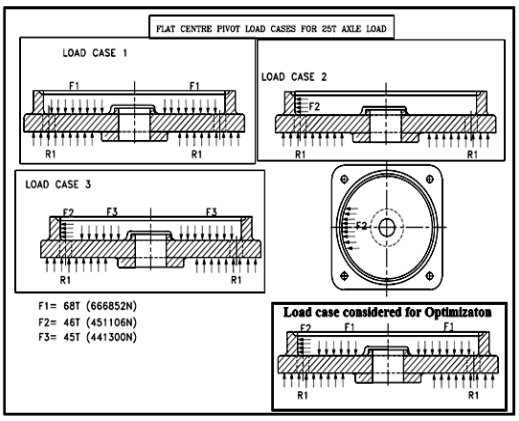

Fig.4: Various Load Cases

Table 1 : Material Properties for Cast steel

Young's Modulus (GPa)	Poisson's ratio	Ultimate Tensile Strength (MPa)	Yield stress (MPa)	Endurance Limit (MPa)
200	0.3	619.92	413.28	247.97

Table 2 : Stress and Deformation for Load Cases

S.No.	Load Cases (N)	Eqv. Von-Mises Stress (MPa)	Directional Deformation (mm)
1	$F_1 = 666852$	34.75	0.002
2	$F_2 = 451106$	270.44	0.080
3	$F_3 = 441300$	23.0	0.001
4	**F_1&F_2**	**270.44**	**0.080**

Stress variation and deformation are shown in Table 3applying maximum forcesi.e. F_1 and F_2in each direction,the behavior of these values are within the permissible range.

Table 3: Stress and Deformation Plot of Initial Model

Stress Plot	Deformation Plot
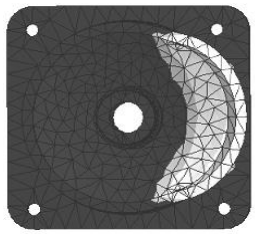	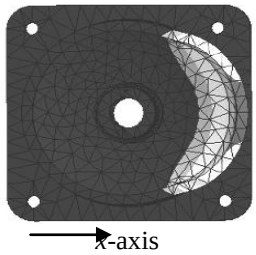
von − Mises Stress = 270.44 (MPa)	Directional Deformation (X − axis) = 0.080 (mm)

A. Results

The design for optimum material distribution is obtained by performing Topology optimizationusing a module ofANSYS. For volume objective function, Von-Mises stress constraint (limited to 270.44MPa). Density based optimization is performed for weight reduction. Iteration no.6 suggested the best result for optimum distribution of material within the selected design space. The model is now reduced to 44.59 kg, while the initial one was 48.79 kg.Initially, the total weight saving is obtained by8.60%. Themodifieddesign is shown in Table 4. The comparativeresults on the basis of mass and volumes of are also shown in Table5. Further, according to topological investigation, the model ismodified by removing undesired materialalso maintaining symmetry for all four sides. Structural check will performed on modified model on the basis of von-Mises stress and deformation.

Table4: Topology optimized design

Top View	Bottom view
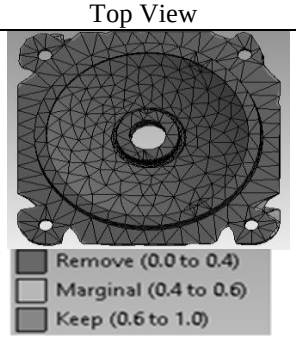	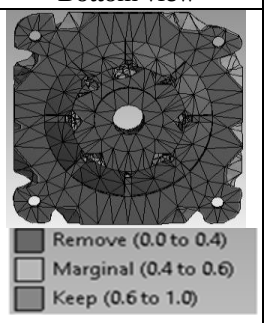

Table 5: Comparison of original and Topology optimized design

Models	Volume(mm^3)	Mass (kg)	Percentage Saving
Original	6216500	48.79	8.60
Optimized	5680900	44.59	

IV. MODIFIED MODEL & ANALYSIS

According to suggested material distribution, initial design ismodified by removing materials uniformly along 4 sides of the original Centre Bearing Plate(i.e. Centre Pivot) of length 330 mm and radius of curvature of 680 mm.The drawing of modified design is shown in Fig. 5. The weight of modified Bottom Centre Bearing Plate is now 45.75kg shown in Fig.6(a). The weight saving as perfinal modified design isobtainedapproximate 6.23%byinitial one.

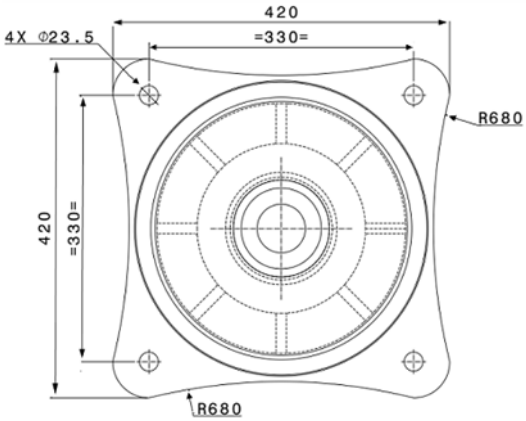

Fig. 5: Drawing of modified design

The structure analysisof the modified design is performed on to verify the strength. The meshing of design is performed by creating coarse size 6715 no. of elements and 11647 no. of nodes as shown in Fig.6 (b). Load case (i.e. application of force F_1&F_2) and boundary conditions is considered as same as the applied on initialdesign. The structural analysis is performed.Stress and deformation plot is obtained shown in Table 6.The comparative analysis of stress and deformation of both original and modified designsare shown in Table7.It is observed that the parameters are within the permissible range and confirms interchangeability [27] of designs.

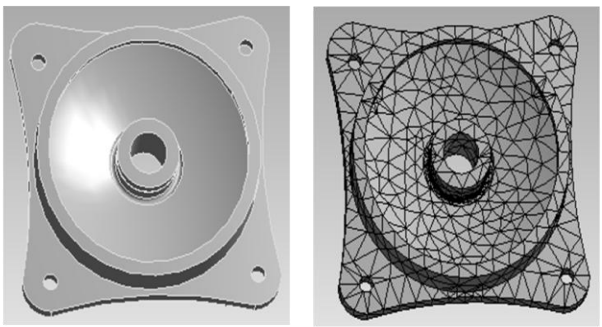

Fig.6(a) &6(b):Modified Solid and MeshModel

Table 6: Stress and Deformation plot of modified design

Stress Plot	Deformation Plot
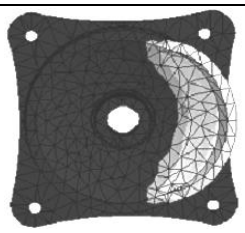	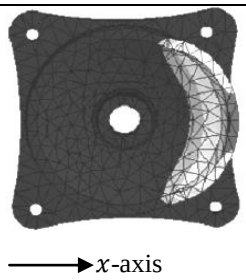
Von − Mises Stress = 254.40 (MPa)	Directional Deformation (X − axis = 0.081 mm

Table 7: Comparison of Original and Modified Design

Design	Load Cases	Von-Mises Stress (MPa)	Directional Defor-Mation (mm)	Vol. (mm^3)	Mass (kg)	Saving (%)
Original	F_1&F_2	270.44	0.080	6216500	**48.79**	**6.23**
Modified	F_1&F_2	254.40	0.081	5827500	**45.75**	

V. MODAL ANALYSIS

The modal analysis of initial and modified design is carried out using ANSYS interface to verify the interchangeability of designs. Initial four mode shapes [28&29] of original and modified designs are extracted as shown in Table8. These mode shapes arecorresponding to each other satisfying outer topologyof the designs.

Table 8: Mode shape of original and modified mode

Mode	Initial Design	Modified design
1st	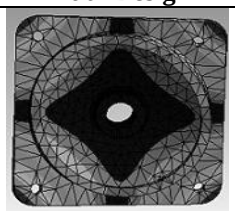 835.69 Hz	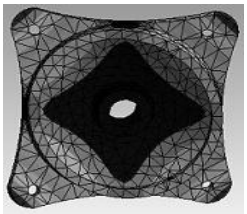 860.5 Hz
2nd	 1109.1 Hz	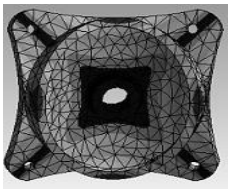 1212.9Hz
3rd	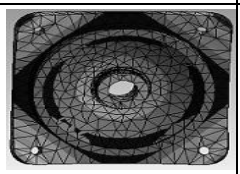 1602.3 Hz	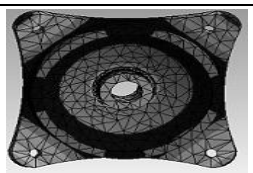 1614.4Hz
4th	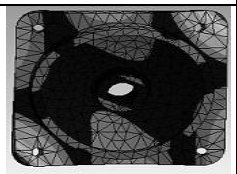 1831.6 Hz	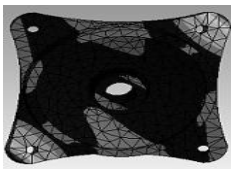 1853.4Hz

VI. CONCLUSION

In present research work, existing design of 25 ton axle load bottom central pivot is verified for Indian Railway design parameters using FE platform. The design module is formulated for topological optimization subject to stress as constrained and volume of the component as objective function. The pseudo-density (ρ_e) is considered as design variablesfor the design for each finite element ranges. Further an effort of topology optimization is performed by means ofANSYS interface.Initially the weight of the initial design is reduced by approximately 8.61%. The design is remodeled making an allowance for material distribution suggested by pseudo-density based optimization outcomes, and considering the symmetry of the model. The final materialsavingby performing optimization exercise is approximate 6.23%.Strength of the modified design is tested through structural investigation. The stress and deformation pattern of the modified and initial designs are in same approach. Topology of initial and modified design is verified by executing modal analysis of both designs.

Acknowledgements: We acknowledge the support from Government of India, Ministry of Railways,Research Designs and Standards Organization(RDSO), Lucknow, India, for providing standard data and design details.

REFERENCES:

1. Truck Bolster, Cast or Structural Design and Testing Specification. 2007.Association of American Railroad (AAR)M-202
2. Yunkang Sui , Guilian Yi.2013,A discussion about choosing an objective function and constraint conditions in structural topology optimization, 10th World Congress on Structural and Multidisciplinary Optimization, , Orlando, Florida, USA.
3. HailuShimels G, DerejeEngida W and H. 2017A comparative study on stress and compliance based structuraltopology optimization 5th Asia Conference on Mechanical and Materials Engineering (ACMME 2017) IOP Conf. Series: Materials Science and Engineering
4. A.G.M. Michell.1904.The limits of economy of material in frame structures. The London, Edinburgh, and Dublin Philosophical Magazine and Journal of Science.
5. M.P. Bendsøe and N. Kikuchi.1988.Generating optimal topologies in structural design using a homogenization method. Computer methods in applied mechanics and engineering, 71(2):197–224.
6. M.P. Bendsoe, and N. Kikuchi.1988. Generating optimal topologies in structural design using a homogenization method,Comput. Meth. Appl. Mech. Eng. Vol: 71: 197-224.
7. Save, M. and Prager, W.1985.Structural Optimization, Volume 1: Optimality Criteria. Plenum Press, New York.
8. M.P. Bendsøe.1989.Optimal shape design as a material distribution problem. Structural optimization, 1(4):193–202.
9. R.V. Dukkipati and V.K. Garg. 1984. Dynamics of Railway Vehicle Systems, Academic Press, Canada,
10. Park B.H. and Lee K.Y.,2006Bogie frame design in consideration of fatigue strength and weight reduction Proceedings of theInstitution of Mechanical EngineersPart F Journal of Rail and Rapid Transitpp 201-206.
11. Shukla S., Gupta R., Vyas N. S. 2009.Parametric Study of Suspension Elements for Ride Index Analysis of an Indian RailwayFreight Vehicle International Journal of Vehicle Structures and Systems,Vol. 1(4), pp 70-77.
12. Jung- Seok Kim.2006.Fatigue assessment of tilting bogie frame for Korean tilting Train: Analysis and static tests, Engineering Failure Analysis, vol. 13, pp. 1326-1337.
13. Jishan Li, Jinhai Wang, Xi Li, Jianwei Yang and Haitao Wang. 2015. The Experiment Study for Fatigue Strength of Bogie Frameof Beijing Subway Vehicle under Overload Situation, The Open Mechanical Engineering Journal, vol. 9, pp. 260-265.
14. Wei Tang, Wenjing Wang, Yao Wang and Qiang Li.2014. Fatigue Strength and Modal Analysis of Bogie Frame for DMUs Exported to Tunisia, Journal of Applied Mathematics and Physics, vol. 2, pp. 342-348.
15. ValeriyBubnov, Sergey Myamlin and NikolayMankevych. 2013.Theoretical and Experimental investigations of Strength Properties of Cast parts for Freight Cars Bogie with Axle Load 245kN," The 8th International Conference Vilnius,Lithuania.
16. Shukla S., Gupta R., Vyas N. S. 2009. Weight Reduction in an Indian Railway CASNUB Bogie Bolster Considering FatigueStrength, International Journal of Vehicle Structures and Systems, 2009, Vol. 2(3), pp 102-109.
17. Prashant Kumar Srivastava, Rajive Gupta &Simant. 2014.Structural Weight optimization of a Bracket using ANSYS, International Journal of Research Engg& Technology, Vol 3, Spl Issue 10.
18. Varun AhujaSandipHazra. 2012.Application of Optimization Techniques in Reducing the Weight of Engine Mounting Bracket, HTC (Hyper Works Technology Conference) Conference, India.
19. M.V.Aditya Nag. 2012. Topology optimization of a Engine Mounting Bracket, HTC(Hyper Works Technology Conference) Conference, India.
20. M. Naveen, K. Jagadeshwar, M. Sai Satish Chandra, T. P. S. Avanish. 2013.Optimization of A Railway Bogie", International Journal of Advanced Engineering Technology,Vol. IV/ Issue II.
21. Prashant Kumar Srivastava, Simant, Sanjay Shukla,2017. Structural Optimization Methods: A General Review, International Journal of Innovative Research in Science, Engineering and Technology, Vol. 6, Special Issue 9.
22. Amstutz S and AA. 2010. Topological optimization of structures subject to Von Mises stress constraints.Struct and MultidisciOptim, 41(3): p. 407-20
23. User Guide ANSYS 18.1 software 2017.
24. User Guide NX-7.5 software 2012.

25. Sanjay Shukla, Manish Pandey. 2017.Weight Reduction of Bottom Center Bearing Plate of frieght rolling stock.International Journal of Engineering Development and Research,Volume 5, Issue 1,pp 271-280.
26. O C.Zienkiewicz and R.L. Taylor. 1989. The Finite Element Method, McGraw-Hill International Editions.
27. J.E. Shigley.1986. Mechanical Engineering Design, McGraw-Hill Book Company.
28. Wliam T Thomson, 1998, Theory of vibration with application, 4th edition StanlyThomes Publisher Ltd.
29. Rao S.S, 2011, Mechanical Vibration, Prentice Hall Publication.

AUTHORS PROFILE

Mr. Prashant Kr.Srivastava isAsst. Professor of Department of Mechanical Engineering in Ambalika Institute of Management& Technology, Lucknow, having experience of more than 13 years in education field and a Ph.D. Scholar in the field of Design. He had completed his M.Tech in Mechanical Engineering Design from Harcourt Butler Technological Institute , Kanpur (currently known as Harcourt Butler Technological University, Kanpur), Uttar Pradesh, India in year 2011 and Bachelor of Technology from M.I.E.T., Meerut, Uttar Pradesh. He has authored two books in Mechanical Engineering and published many papersin National and International journals. His main field of research is design optimization approach applied to mechanical structure and components.

Dr. Simant, is Professor and Director of Sagar Institute of Technology & Management, Barbanki, having experience of more than 19 years in education field and two and half years Industry experience. He had completed his PhD in Mechanical Engineering from Uttar Pradesh Technical University (currently known as Dr. A. P. J. Abdul Kalam Technical University), Lucknow, Uttar Pradesh, India in year 2013 and Master of Technology from M.N.N.I.T., Allahabad, Uttar Pradesh, India in Computer Aided Design & Computer Aided Manufacturing (CAD/CAM). He has published three books in Mechanical Engineering and authored more than Twenty National and International papers. His main field of research is in Composite Materials, Finite Element Method and Advance Mechanics of Solids.

Dr. Shukla, is Senior Research Engineer (Design) in Government of India, Ministry of Railways,Research Designs & Standards Organization, Manak Nagar, Lucknow (India), having experience of more than 25 years in Research/Industry field. He had completed his PhD in Mechanical Engineering from Uttar Pradesh Technical University (currently known as Dr. A. P. J. Abdul Kalam Technical University), Lucknow, Uttar Pradesh, India in year 2012 and Master of Technology from V.N.I.T., Nagpur, Maharashtra, India, in Linkage Design. He has published more than Ten National and International papers. His main field of research to design & develop the railway vehicle performing Flex Multi Body Dynamics Analysis using the coupling of Finite Element Method and Multi Body Dynamics interface.