International Journal of Recent Technology and Engineering (IJRTE)
ISSN: 2277-3878 (Online), Volume-8 Issue-2, July 2019

Energy Competence of Base Station in cellular Network

J. Premalatha, SahayaAnselin Nisha

***ABSTRACT** Energy efficiency is the key concept of wireless communication to achieve green network. Green networking is the process that reduces consumption of energy as well for conserving bandwidth and also for any other process that will ultimately reduce energy use and, indirectly, the expense. With the rapid growth of technologies in wireless network and rapid increase of mobile users the problem of spectrum usage as well as energy consumption plays a vital role. As there is anexponential increase in the deployment of base station every year the power consumed by base station is the significant theme of intrigue. The increase in the number of base stations also leads to environment impact of CO_2 emission which is normally due to powering up the base station which is located in remote areas as these off-grid sites are powered by diesel generators. It is been predicted that if this trend continues then the energy consumed by cellular network in future will lead to a serious problem.Thus, there has to be a tradeoff between the quantity of subscribers and the quantity of base station or otherwise it will affect the system throughput. In this paper a brief review of methods that have been used recently to improve the energy consumed by the base station is analyzed.*

***Keywords:** Energy Efficiency, Base station, CO_2, Sleep mode, Optimization, Genetic Algorithm*

I. INTRODUCTION

The exponential increase in mobile users every year and the expectation for fast information transmission led enormous growth in cell arrange. In the year 2017 the quantity of versatile subscribers achieved 4.77 billion. The quantity of cell phone subscribers on the planet is relied upon to develop to five billion by 2019. And also the deployment of base station has doubled between 2012-2017 and is expected to get increased by more than four million by 2018[1].With all this statistics it is clear that as these increase in number of mobile users there is a increase in the number of base station so as to mitigate the increasing data traffic. In a cell arrange the base station is the one which utilizes 58 % of total energy consumed. It is important to concentrate on the energy consumed by base station to conserve world economic condition and likewise to decrease the natural impacts. During 2002 the amount of carbon-dioxide emitted due to information and communication technology was found to be 151 $MtCO_2$ of which 43% is due to mobile sector. This is expected to increase by 349 $MtCO_2$ of which 50% will be due to mobile sector [2].

Revised Manuscript Received on 30 July 2019.
***** Correspondence Author
J. Premalatha*, Department of Electronics and Communication, Sathyabama Institute of Science and Technology, Chennai, India
Dr. SahayaAnselinNisha, Department of Electronics and Communication, Sathyabama Institute of Science and Technology, Chennai, India

Thus keeping all these aspects into mind we have to concentrate on both economic and environmental effects.
It is evident from the Fig.1 that 58% of the power is devoured by base station from the overall power consumption of cellular network.
In this paper we give a broad overview of energy consumed by base station in a cellular network form the past to present scenario for example ,cell zooming ,cell switching, , heterogeneous networks, and the with features on
the standards of operation, energy savings, LTE technology with GA (geneticalgorithm)and shortcomings of each technique.

II. METHODS TO REDUCE BASE STATION POWER CONSUMPTION

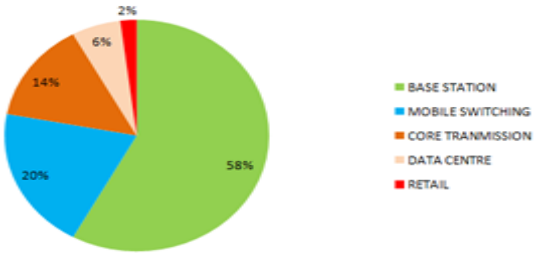

Fig 1. Power consumption in cellular network

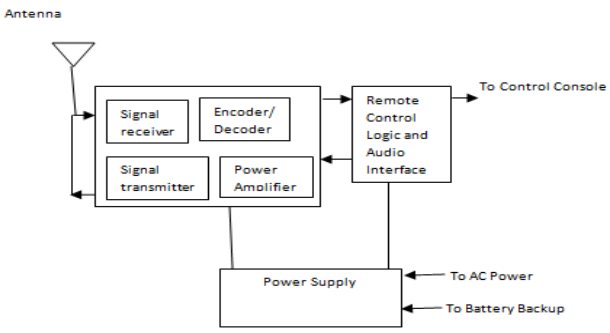

Fig 2. Basic block diagram of base station

The major components of major cellular base station are Antenna, Signal transmitter, signal Receiver, Encoder, Decoder, Power amplifier, the control unit, main power supply, and interfaces as shown in fig 2. Base station which is also known as Base Transceiver Station (BTS) acts as an interface between subscriber device and telecom operator network. A typical base station consists of Transceiver (TRX)which performs transmission and reception of signals, a combiner which combines signals from several TRX such that they are sent out through a single antenna which reduces the number of antennas to be installed, a duplexer which separates the sending and reception of signals to and from the same antenna.

The antenna is the part of a BTS. Power amplifier where the signal from the TRX is amplified for transmission through antenna.For economic reasons cellular operators are intended in lessening energy utilization as 80% of the total energy of radio access network is being consumed by base station. Fred Richter et al. state, states that there two ways by which we can reduce the power consumed by base station. First method is to optimize individual sites and second by improving deployment strategies. When we deploy a network, it will give better result if the topology ishaving high density deployments of small, low power base station compared to low density deployments of few high power base stations [4].Due to advantageouspath loss condition and shorter propagation distances, the macro base station which experiences much high average signal to inference and noise ratios (SINRs).Cellular mobile radio systemperformance is measured from spectral efficiency per unit area. In [6] a suitable algorithm is proposed to minimize the supply power utilization of base station, thequantity of transmit antennas, the RF transmission power per resource unit and spatial channel, the quantity of intermittent transmission time slots, and the multiuser resource allocation. Dependent on the system load this algorithm reduces the supply control utilization by somewhere in the range of 25% and 40%.

III. SLEEP MODE MECHANISM FOR BASE STATION ENERGY CONSUMPTION

In [7] sleep mode mechanism for small cells is been discussed since small cells plays a vital role where there is heavy mobile traffic with low cost. Small cells like femto, Pico and micro cells [20] provide high data through put and improved coverage for office and home use. An advantage factor of deploying small cells is that when integrated with advanced sleep mode techniques it significantly reduces the energy consumption. Small cells are basically used to provide efficient and superior cellular coverage for home use,hotspot outdoor environments and enterprises. Here the hardware components consist of microprocessor for managing radio protocol stack, random access memory connected to microprocessor used for data handling and system boot up, field programmable gate array (FPGA) responsible for information encryption, equipment validation and system time convention, a Rf power amplifier which transmits signal to transmitting antenna whose power is high.

Sleep state is nothing but introducing low power state in the hardwareequipment of the network design.Imran Ashrametal.depicts sleep mode procedures in small cell as these small resides in any one of the states at random time. The two states are READY state (RS) and SLEEP state (SS). RS is one were all the hardware components are switched on.SS is one where some of the hardware components are switched off completely or allowed to operate in low power mode. In this paper three sleep mode mechanismshas been discussed. They are small cell controlled sleep mode where an active call from user equipment (UE) can be detected by a low power sniffer in the small cell. Second one is the core network controlled sleep mode; here a wake up message is used to transit from SS to RS which is controlled by core network through backhaul network. The third one is the UE controlled sleep mode where the UE controls the sleep mode. Initially the small cell, if it is in SS has the capacity to receive wake up signal from UE. At this stage whenever it receives a wake-up signal it transits to RS. With these threesleep mode mechanism they have achieved the range which between10-60% of energy savings in the network when compared to the network which doesn't have small cell sleep mode mechanism. This technique greatly reduces the transmitter and receiver distance which in turn reduces transmission power and also the battery life of UE is been extended. Some of the sleep techniques in base station is been completely provided in [8] as a comprehensive survey.

Table 1. Parameters used in base station power reduction

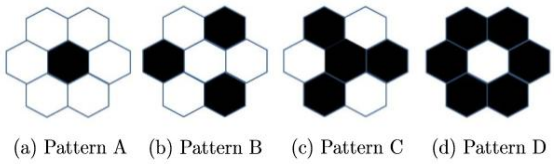

Fig 3. Base station sleeping patterns [9]

Fig 3. is an example of different BS sleeping pattern which is based on 7- cell cluster [9]. Here the 49-cell network is been decomposed into 7-cell cluster. The above fig 3 depictsthe dark cell which denotes the cell is been served by base station which is in sleep mode. The light cell indicates the cell is served by the base station which is in active mode. It is clear from the picture that each sleep mode base station has its neighboringactive base station and it implies that at traffic arriving at sleep mode base station can be served by neighboring active base station .In [10] a static energy saving model is developed which focuses on 1-D multihop vehicular network which has uniform base station deployed at road side. This paper deals with the communication between two mobile vehicles on the road. The basic concept behind this network is that during night time if there is no vehicle is in its range, the wiser idea is to switch off the base station as a result it considerably reduces the base station energy consumption. Tao Han et al. consider bothvehicle to vehicle and vehicle to framework communication. A homogenous Poisson process with certain density value is followed with the spatial distribution of vehicles. Here Euclidean distance (U) between two arbitrarily chosen adjacent vehicles and Euclidean distance (V) between two arbitrarily chosen adjacent cluster head (CH),where the CH is the one which can directly communicate with the closest base station and the other entire vehicle in the group of vehicles (cluster) can communicate to the base station through the CH only. The energy saving analysis in this paper [10] is that a set of base station is deployed with a distance S between adjacent base stations. If V is larger than S, then T represents the time taken from first CH which leaves the communication scope of base station to the following CH which enters the communication range of base station. Thus, the transmitter and amplifier of the base station can be turned on and off to spare energy. Hence the time span of base station in the sleep mode is T. [10]

proves that with multi-hop communication base station energy is been saved when it is compared without multi-hop communication. In infrastructure – based vehicular networks, theever increasinginformation demand of vehicles lead to more operational power of base station which is a straight capacity of transmission control [11].

The above discussed sleep mode mechanism is some of the techniques through which we can diminish the power devoured by base station.

IV. OPTIMIZATION TECHNIQUES OF BASESTATION FOR EFFICIENT ENERGY CONSUMPTION

Optimization technique is another interesting method to lessen the energy utilization in base station of a cellular network. In this section the different ways of optimizing the energy consumed in base station is thus discussed. Thekey concept of [12] is that having large number of smaller micro cells improves energy than having smaller number of high-powermacro cell. The advantage here in [12] is that it uses random distribution of users. [12] Concentrateson downlink transmission which dominates most of the radio frequency (RF) transmission of base station. The main problem discussed here is to find the ideal number of base station and what's more, to position the base station in the proper locale. The above said problem is same as that of facility location problem and there are so many ways to solve the same which is discussed in [13] [14]. Tayeb Lemlouma et al. introduce PCNM which is nothing but a new way for cellular network measurements. Here it compares the theoretical data with the real measurement of cellular environment by using prediction methods which helps in cellular network maintenance and performance evaluation. In PCNM platform [15] the two main nodes come into play .one is the mobile node which is like sensor for cellular network and other is the central node which monitors the mobile node and also it stores the static information of the network. The results in [15] showed the evaluation of network performance measurements which was based on optimal and quick geneticalgorithm. Also,PCNM experiments give a wide knowledge about the cellular network characteristics. Next category is to locate the base station in Long term Evolution (LTE). It is necessary to optimize base station in LTE since promising it is a technology where the size of the cell is reduced. When the cell size is reduced, more number of base station can be deployed, and if more number of base station is deployed more power will be consumed by the base station. Consequently, there is a need to decrease the power in LTE base station andtherefore advancing transmission control [16] in LTE base station plays a very important role in cellular network. For base station location models, the application of genetic algorithm (GA) plays an important role [17-19].

Table 1. Parameters used in base station power reduction

TITLE OF THE PAPER	**PRAMETERS USED**						
Minimizing Base Station Power Consumption	**Objective-** minimizing base station supply power consumption	**No of users-** 10	**Maximum transmission power-** 46dbm	**Number of Transmit Antennas-** [1,2]	**Number of receive antennas-** 2	**Base station radius** Minimum Distance- 40m Maximum distance- 250m	**Reduction in power consumption** -25%-40%
SLEEP Mode Techniques for Small Cell Deployments	**Objective-** power reduction in small cell base station by sleep mode algorithm	**Type of cell deployed** 1.pico cell 2.macro cell	Total number of moile subscribers- 40000	**For outdoor-** 10000 users **For indoor-** 30000 users	**Power consumed by macro cell-** 1.317kW	**Power consumed by pico cell-**5W	**Power saving** -10 to 60%
Energy Saving of Base Stations Sleep Scheduling for Multi-Hop Vehicular Networks	**Objective-** sleep mode strategy for moving vehicle	**Distance between adjacent base station-** 800m	**Base station power in sleep mode-** 1kw	**Total energy cost of base station for turning it on and off-** 10 J			
Base Station Location Optimization for Minimal Energy Consumption in Wireless Networks	**Objective-** Base station locationand optimal power allocation	**Cell radiys -** 167 m	**Base station location-** 13 numbers	**Number of users-** 30	**Power consumed-** 13.3dB	**Power reduction** -96% for the given example scenario	
PCNM: A New Platform for Cellular Networks Measurements	**Objective-** connects theoritical calculation with real	**Test area- 50km*50km**	**Two types of nodes**	**Genetic algorithm -used to reduce nodes**			

and Optimization	cellular network b y simulation.		**Mobile node**-acts like sensor for cellular network **Central node-** monitors the mobile node	**mobility**			

V. CONCLUSION

Cellular network assumes indispensable job in wireless communication since every single day there is an expansion in number of mobile subscribers. As there is an exponential increase in mobile subscribers eventually there is an increase in deployment of base station. At the point when the quantity of base stations is increased the power consumed by the base station increases exponentially. Thus, there is an urgent need to decrease the power devoured by the cellular network considering both the cost and environmental factor. In this paper we have focused on the power utilization of base station since a large portion of the vitality is been devoured by base station. In this paper an examination of intensity utilization of base station is been done and the various ways by which the power devoured by base station can be diminished is been talked about.

REFERENCES:

1. 1.Mohammed H. Alsharif *, Jeong Kim and Jin Hong Kim,Green and Sustainable Cellular Base Stations: An Overview and Future Research Directions, Energies 2017.
2. Mohammed H. Alsharif, RosdiadeeNordin, and MahamodIsmail ,A Review on Intelligent Base Stations Cooperation Management Techniques for Greener LTE Cellular Networks, *Journal of Communications*,Vol. 9, No. 12, December 2014,pp.no.937-945
3. Patel MiteshkumarManharbhai ,ShrikantAhirwar , ParitoshGoldar , An Exploratory Review of Base Station Power Optimization Techniques and Methods, *IJETCSE*, Volume 16 Issue 2 – JULY 2015,pp.no.83-86.
4. Fred Richter, Albrechtechnism for J. Fehske, and Gerhard P. Fettweis,"Energy Efficiency Aspects of Base Station Deployment Strategies for Cellular Networks", IEEE 2009.
5. M. S. Alouini and A. J. Goldsmith, "Area spectral efficiency of cellularmobile radio systems," *IEEE Trans. Veh. Technol*., vol. 48, no. 4, pp.1047–1066, July 1999.
6. 6.Hauke Holtkamp, Gunther Auer, Member, Samer Bazzi, ,and Harald Haas," Minimizing Base Station Power Consumption ",*IEEE journal on selected areas in communications*, VOL. 32, NO. 2, February 2014.
7. Imran Ashraf, Federico Boccardi, and Lester Ho, Alcatel-Lucent," SLEEP Mode Techniques for Small Cell Deployments", *IEEE Communications Magazine*, August 2011,pp.no.73-79.
8. 8.J. Wu, Y. Zhang, M. Zukerman, E. K.-N. Yung, Energy-efficient basestations sleep-mode techniques in green cellular networks: A survey, *IEEE Communications Surveys and Tutorials*,17 (2) (2015) 803–826.
9. Jingjin Wu, Eric W. M. Wong, Jun Guo, Moshe Zukerman," Performance Analysis of Green Cellular Networks with Selective Base-Station Sleeping",*Performance Evaluation*, Volume 111 Issue C, May 2017,pp.no.17-36.
10. Tao Han, Xiong Liu, Lijun Wang, Jiang Wang, Kyung Sup Kwak and Qiang Li, "Energy Saving of Base Stations Sleep Scheduling for Multi-Hop Vehicular Networks ",2014 IEEE 79th Vehicular Technology Conference (VTC Spring).
11. X. Ge, H. Cheng, M. Guizani, and T. Han, "5g wireless backhaul networks: challenges and research advances," Network, IEEE, vol. 28, no. 6, pp. 6–11, Nov 2014.
12. Pablo Gonz´alez-Brevis, Jacek Gondzio, YijiaFan ,H.Vincentpoor,John Thompson, IoannisKrikidis ,Pei-Jung , Base Station Location Optimization for Minimal Energy Consumption in Wireless Networks,*Proceedings of the 73rd IEEE Vehicular Technology Conference*, IEEE, Yokohama,2011,pp.no1-5.
13. P. V. McGregor and D. Shen, "Network design: An algorithm for the access facility location problem," IEEE Trans. Commun., vol. COM - 25, no. 1, pp. 61-73, Jan. 1977.
14. R.K. Ahuja and T.L. Magnanti and J.B. Orlin, Network Flows: Theory, Algorithms, and Applications, Prentice Hall, 1993.
15. Tayeb Lemlouma ;Yoann Lefebvre ; Frederic Cespedes, PCNM: A New Platform for Cellular Networks Measurements and Optimization ,*2007 International Conference on Wireless Communications, Networking and Mobile Computing,IEEE*,CHINA,2007,2968-2971.
16. Aida Al-Samawi, AduwatiSali, Nor KamariahNoordin, Mohamed Othman, and Fazirulhisyam Hashim, Base Station Location Optimisation in LTE using Genetic Algorithm, 2013 IEEE.
17. G. Koutitas, "Green network planning of single frequency networks," Broadcasting, IEEE Transactions on, vol. 56, no. 4, pp. 541–550, 2010.
18. S. Louvros, K. Aggelis, and A. Baltagiannis, "Lte cell coverage planning algorithm optimising uplink user cell throughput," in Telecommunications (ConTEL), Proceedings of the 2011 11th International Conference on, pp. 51–58, IEEE, 2011.
19. T.Rolich and D. Grundler, "Minimizing environmental electromagnetic field pollution adjusting transmitter parameters using genetic algorithm," in Evolutionary Computation, 2009. CEC'09. IEEE Congress on, pp. 881–887, IEEE, 2009.
20. R. Narmadha,Heterogeneous network security management,International Journal of IntelligentEnterprise, 2019 Vol.6 No.1, pp.32 – 52,https://doi.org/10.1504/IJIE.2019.100033.

AUTHORS PROFILE

J.Premalatha was graduated in 2004 with B.E in Eectronics and Communication Engineering degree from Bharathidasan University. In 2008 she received her MTech degree with specialization in Electronics and communication Engineering from Pondicherry university. She has enrolled as a Ph.D. Candidate in School of Electrical and Electronics Engineering fromSathyabama Institute of Science and Technology. Her research interest includes Wireless communication, LTE, MIMO Communication.

Dr. SahayaAnselin Nishawas born in 1981 in Tamilnadu.She received doctorate degree in the field of Microwaves in Sathyabama University in 2013, B.E Electronics and Communication Engineering in 2002 and M.E degree in Applied Electronics in 2006 with gold medal from Sathyabama University. She has more than 16 years teaching experience. At present she is working as anAssociate Professor in SathyabamaInstitute of Science and Technology, Chennai. She has published more than 20 papers International/National conferences. She has published a book named as, optical communication. Her field of interest is Electromagnetics, Microwaves and Antennas.