International Journal of Recent Technology and Engineering (IJRTE)
ISSN: 2277-3878 (Online), Volume-8 Issue-2, July 2019

Design and Fabrication of Automatic Spring Type Chip Conveyor

T. A. Selvan, A. Viswanathan, S. Madhankumar, S. Sneha

Abstract*: It is necessary to use an efficient chip removal system to increase productivity on the shop floor. Conventional conveyor systems such as belt conveyors are being used in industries. The Belt conveyors used in the computer numerical control (CNC) machining firms, remove the metal chips falling from the machine. A machine shop is operated on a small scale certainly has limitations to adopt these chip removal systems economically and precisely. In order to simplify the process, decided to develop an efficient and economical solution for the chip removal process. The spring type chip conveyor is designed to overcome the problems faced while using a belt conveyor and also to remove the metal chips from the machine in a faster and cheaper rate.

Index Terms*: CNC machine, conveyors, metal chips and spring.

I. INTRODUCTION

The main process on the shop floor of any industry includes the production and manufacturing of machined parts. The chip removal system is responsible for safe and faster removal of metal chips from the machine to the container. Thus, the chip removal processes are of utmost importance on a shop floor. The chip removal process can be done using various Belt and Screw Conveyors. The spring type chip conveyor is also a common piece of chip removal mechanism for a CNC turning machine. To increase the functionality of this mechanism we either need to combine the properties of the belt conveyor and screw conveyor or make modifications to the existing system. [3] designed an industrial belt conveyor for transporting materials is from one place to another place. The belt conveyor is modeled by using parametric Creo design software, and ANSYS Workbench software is used for the analysis of the computer-aided model. The belt conveyor is mainly used in industries for continuous transport to achieve maximum efficiency, conveying capacity and operation reliability should be high, and mainly used for different distances and variety of materials. And also discussed the evaluation of elongation and stress of the designed model. [4] discussed the semi-flexible screw conveyors for moving grains, fine coal and other bulk materials solid as well as liquids are used in a variety of situations. In some cases, need to transport the material over a maximum distance or heights. As of now, to satisfy the need for a flexible screw conveyor various concepts have been developed. For conveying grains, the flexible screw auger is invented in April 1958 by Fennimore and Stephenson. The developed flexible screw conveyor model is the phenomenon of folding and bunching of the flexible tubing at the inside of a bend. [2] studied roller conveyors used in the handling of materials. An attempt is made to test the feasibility of a fiber composite material with optimum properties, with an idea of replacing the existing stainless-steel material in industrial conveyor application. Explored the static analysis of a roller conveyor has entailed performing of Finite Element Model is developed using Creo Parametric software. The total deformation, strain, and stress have been found with the help of steel material. [1] reviewed on flexible spring conveyor system for transporting materials. The selection of a conveyor is based on properties of the material it is one of the best factors to be considered and it allows to maintain the center. For distance and space constraints spring conveyor will be very useful for transporting material from one area to another area. The spring plays the major role were taken away to any position and when required. Discussed axial and radial force acting on spring tube/wire, this force against radial gives safe value. [5] Reported that jumping over teeth occurred more easily at the driven sprocket than at driving sprockets. Driven sprockets normally have more no. of teeth than drive sprocket and in any chain drive, chain wrapping will be more on the larger sprocket. This is due to the cumulative effect of pitch variation due to wear or excessive loading chain jumping over teeth phenomenon taking place. The belt conveyor system is a failure in the machining industry and it requires heavy maintenance. Hence, decided to design a spring conveyor system to replace the existing mechanism. The following parameters are taking into consideration during the design of the conveyor,

1. Cost-effective
2. Simple and efficient design
3. Maintenance friendly

Revised Manuscript Received on 30 July 2019.
* Correspondence Author

Dr. T. A. Selvan*, Department of Mechatronics Engineering, Sri Krishna College of Engineering and Technology, Coimbatore, India – 641008.

Dr. A. Viswanathan, SNS College of Technology, Coimbatore, Tamil Nadu, India – 641035.

S. Madhankumar, Department of Mechatronics Engineering, Sri Krishna College of Engineering and Technology, Coimbatore, India – 641008.

S. Sneha, Department of Mechatronics Engineering, Sri Krishna College of Engineering and Technology, Coimbatore, India – 641008.

Loss due to manual chip removal process in a plant is very high for a small-scale enterprise, whereas the cost of the chip removal process using the spring conveyor is relatively very low.

II. PROPOSED METHODOLOGY

The main objective of this work is to design and fabricate spring conveyor for a CNC turning machine to ease the process of the chip removal by providing a mechanism that will reduce the effort and the time required for the process. Moreover, it only requires only one worker for controlling the process, thus saving time and not interrupting other processes on the shop floor. Also, this arrangement should be such that it can be detached anytime and also be attached to a variety of stackers in the same capacity range.

A. *Flow chart*

The figure 1 shows the flow chart for the Automatic Spring type Chip Conveyor. The main components of the developed attachment for the spring type chip removal system are as follows:

1. Base frame
2. Spring
3. Spring tray
4. Drive shaft
5. Chain sprockets
6. Chain
7. Gear box
8. 0.5 HP Motor

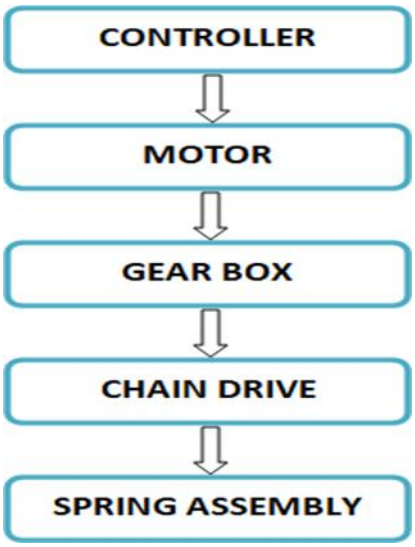

Figure 1. Flow chart

B. *Components*

Spring - The spring is made up of grade 2 steel. The dimensions of the spring include a diameter of 95mm, thickness of 12 mm and lead 40mm for a total length of 420mm. The spring is attached to the gear box through a drive shaft at the end. The spring constant is calculated by the ratio of change in the force to the change in elongation of the spring. the unit for tension or compression of the spring has a unit of force by length, i.e. N/m. Torsion springs have units of torque by angles, such as Nm/rad. Compliance is defined as the inverse of spring rate. If a spring has a rate of 1 N/mm, it has the compliance of 0.01 mm/N. The stiffness (or rate) of springs in parallel is additive, as is the compliance of springs in series.

Sprocket - The sprocket 1 and sprocket 2 are chosen in such a way to achieve an approximate speed of 56 rpm. The outer diameter and number of teeth are calculated as per the formula,

$$Z_1 / Z_2 = N_2 / N_1 \quad (1)$$

The power is transmitted from the drive shaft to a driven shaft with the help of sprocket and chains. Belts or ropes are replaced by sprocket chains, pulleys replaced by sprocket wheels, it is a wheel of some profile with teeth that mesh with a chain and never directly mesh with pulleys.

Gear Box - Transmission in a machine is done using a power transmission system, which provides controlled application of the generated power [11]. Often the term transmission refers simply to the gearbox that uses the gears and gear trains to provide speed and torque conversions from a rotary power source to another device. Power transmission in a gear box has multiple gear ratios with the ability to switch between them as speed varies. This switching may be done manually (by the operator) or automatically. Directional control can also be provided with the gear box. The type of gearbox chosen here is a worm reduction gearbox with a reduction ratio of 25:1, that is capable of achieving an effective speed of 56 rpm.

Motor - The motor chosen for this mechanism is a three-phase induction motor with 0.5 HP power (0.37 KW) and 1440 rpm, it is mounted on a gear box with a reduction ratio of 25:1 that is capable of restricting the speed under 56 rpm.

Shaft - Shaft 1 is used to connect the spring to the bearing box. One side of the shaft1 is welded to the spring and other side is inserted into a p205 bearing block. Shaft 2 is welded to the spring support and the other side is inserted to a bearing block. A keyway is made on one end of the shaft which serves as the housing for the chain sprocket 2.

Controller - As per the present design, the chip removal mechanism might run throughout the day. But the frequency of chips falling is approximately 300 – 400 grams per minute. In this case our spring is capable of dragging more than 3 kilograms per minute. Hence our motor can be switched ON once in a while depending on the chip generation. Hereby the end user can save more than 40% power. To achieve this, a PLC or any other Controller can be connected to our system to switch on and switch off the mechanism when it is required [6]. It is also possible to connect the controller to the main PLC unit of the CNC turning machine. The type of controller can be chosen based on the requirements. The main advantage of using a controller in this mechanism is that time delay can be set and can be varied by the users accordingly.

III. RESULTS AND DISCUSSION

A. *Design and Analysis*

The proposed design is modeled by using Creo parametric software 15 [10]. The figure 2 and Figure 3 shows the Orthographic projections and isomeric diagram of automatic spring type chip conveyor.

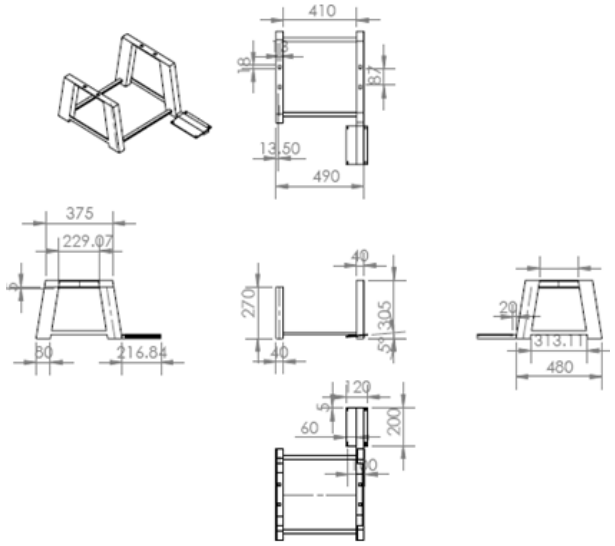

Figure 2. Orthographic diagram of proposed system

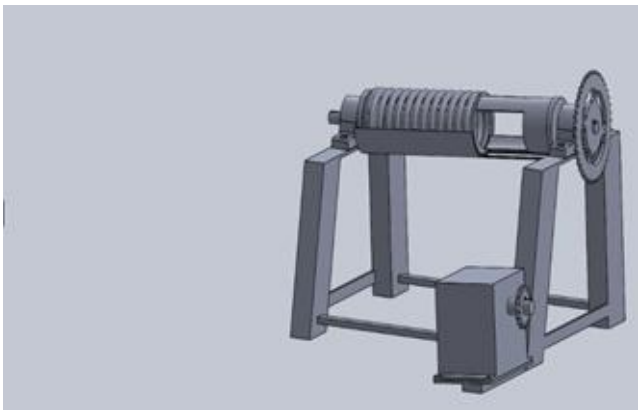

Figure 3. Assembly Model

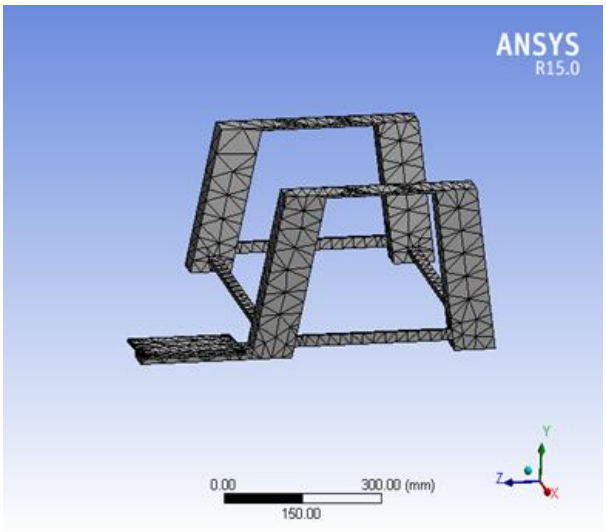

Figure 4. Mesh design

The designed static structural model is used for analysis. The static stress value is calculated with the help of Ansys software and applied the force on the top of the system, it shows in figure 5 and figure 4 respectively. The maximum stress is developed as 98 N/mm^2.

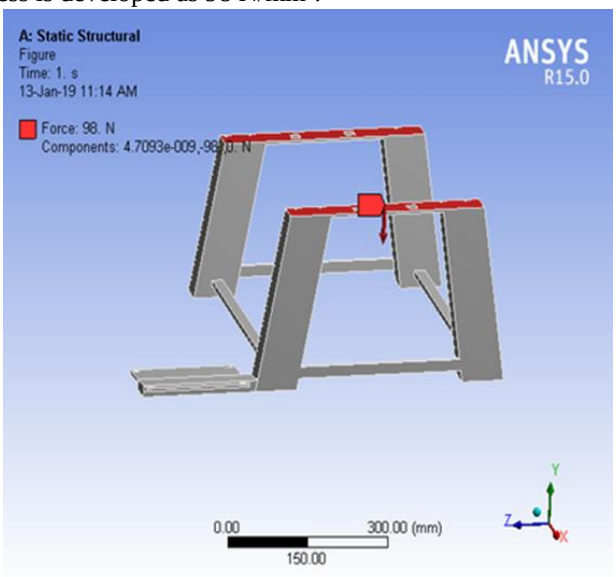

Figure 4. Static structural stress

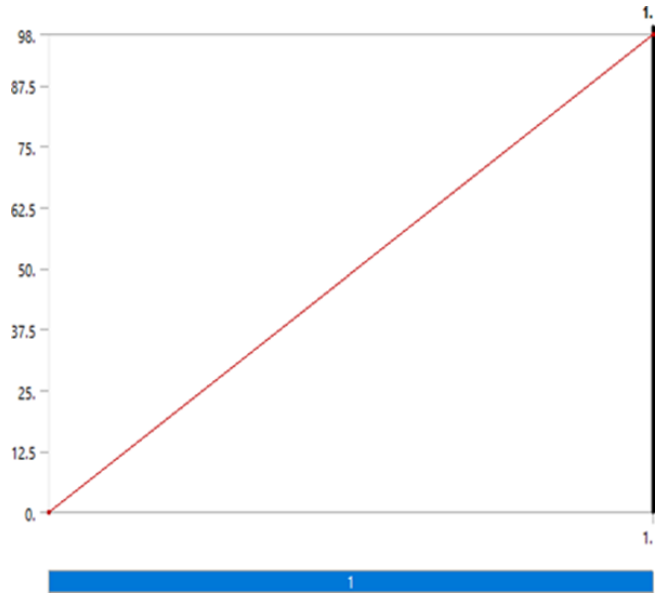

Figure 5. Static stress graph

B. *Calculations*

In order to pull the scrap in a uniform motion, the required rpm is between 15 to 20. The 0.37 KW (0.5 HP) motor rpm is 1440, the gear box used is 25:1 ratio. The center distance, a is restricted to 420 mm. Hence, the output rpm is 56. The number of sprockets required for the mechanism is 2. The number of teeth in the driven sprocket is 14.The number of teeth in sprocket 1 can be calculated using equation (1). N_1 and N_2 denote the speed at the which the sprocket rotates. Hence, the number of teeth for sprocket 2 is found to be 40.

Transmission ratio, $i = N_1 / N_2$ (2)

The transmission ratio for the roller chain is defined as the ratio of the speeds of both the sprockets. The transmission ratio (i) can be calculated from equation (2).

$$P_{max} = a/30 \quad (3)$$

$$P_{min} = a/50 \quad (4)$$

The centre distance, a= 420 mm is used to calculate the maximum and minimum pitch using the equations (3) and (4). With reference to the maximum and minimum pitch values, the standard pitch, P is found as 12.7 mm from the design data book 7.72 [9]. The tangential force acting on a driver gear is the reaction force from the driven gear. It acts opposite to the direction of rotation of driver. The tangential force, Pt is calculated as 2299 N from equation (5).

$$P_c = m*v^2 \quad (5)$$

The centrifugal tension is obtained from equation (5), where m denotes the mass and v denotes the velocity of the drive.

$$K_s = k_1 \times k_2 \times k_3 \times k_4 \times k_5 \times k_6 \quad (6)$$

The service factor is used to account for variation in the driving and the driven sources of the roller chains. The values of k_1 to k_6 can be obtained from the design data book (7.76, 7.77) [9]. The service factor for the mechanism is calculated using equation (6).

$$FS_w = Q/(P_T * K_s) \quad (7)$$

The factor of safety expresses how much stronger a system is than it needs to be for an intended load. The factor of safety is obtained from equation (7) where Q denotes the load acting on the system. The factor of safety is calculated as 3.03, hence the design is safe.

C. *Working*

As per the present design, the chip removal mechanism might run throughout the day. But the frequency of chips falling is approximately 300 – 400 grams per minute. In this case our spring is capable of dragging more than 3 kilograms per minute. Hence our motor can be switched ON once in a while depending on the chip generation. Hereby the end user can save more than 40% power. To achieve this, a PLC or any other Controller can be connected to our system to switch on and switch off the mechanism when it is required. It is also possible to connect the controller to the main PLC unit of the CNC turning machine. The type of controller can be chosen based on the requirements. The main advantage of using a controller in this mechanism is that time delay can be set to switch on and switch off the mechanism automatically without any human intervention [7].

IV. CONCLUSION

The Spring type chip removal system is designed to overcome all the existing problem factors and to achieve better results. The maintenance cost is reduced by 15%. The chip removal efficiency is increased by 25% by implementing this method. The cost of the proposed system is also designed to be lesser than the existing systems. The existing belt conveyor for chip removal has a lot of maintenance issues due to its complicated design. If pieces of bigger diameter alternatively happen to fall in the belt area, it leads to a jam [8], whereas this screw easily brings the metal scrap to the bin.

REFERENCES

1. Prof. Y.V.Dandekar, Prof. A. P. Edlabadkar, Prof. P.P.Sargaonkar, “Replacing manual material handling with flexible spring conveyor system for conveying bulk material”, international journal of pure and applied research in engineering and technology, dandekaryv, ijpret, 2013; volume 1(8): 214-2231
2. Prof. Ravindra Gandhe, “study and analysis of roller conveyor in material handling” international journal of engineering sciences & research -technology, ISSN: 2277-9655 (I2OR), Publication Impact Factor: 3.785
3. Vidhyadhar P. Kshirsagar, Rohini N. Sangolkar, “modeling and analysis of industrial belt conveyor system using creo parametric and ansys software”, International Journal of Technical Research and Applications e-ISSN: 2320-8163, www.ijtra.com Volume 3, Issue 4 (July-August 2015), PP. 178-181
4. Santanu Chakarborthy, “Semi flexible screw conveyor”, IOSR journal of mechanical and civil engineering (iosr-jmce) eissn: 2278-1684, p-issn: 2320-334x, volume 11, issue5 ver. iv (sep- oct. 2014), pp 01-13.
5. Chetan sanghani, Smit patel, Meet patel and Anand patel, /“Power magnification by chain drive”, International Journal for Innovative Research in Science & Technology, Volume 1, Issue 9, February 2015 e-ISSN: 2349-6010
6. Awadallah Sulieman Rahama, Dr. Dalia Mahmoud, “Control of Induction Motors by Using Programmable Logic Controllers (PLC)”, International Journal of Science and Research (IJSR) ISSN (Online): 2319-7064 Index Copernicus Value (2013): 6.14 | Impact Factor (2015): 6.391
7. Adarsh Verma, Arbaj Sayyad, Shrey Kanherkar , Harishchandra Gore, Harshad Mahajan, Prof. Dr. D.S.Bankar, Prof. S.A.Namekar, “Control of Induction Motor Using PLC and VFD”, International Research Journal of Engineering and Technology (IRJET), Volume: 05, Issue: 05 May 2018, e-ISSN: 2395-0056, p-ISSN: 2395-0072
8. G.Velmurugan, M.Sambathkumar, R.Vijayakumar, “Conveyor Belt Troubles”, International Journal of Emerging Engineering Research and Technology Volume 2, Issue 3, June 2014, PP 21-30 ISSN 2349-4395 (Print) & ISSN 2349-4409 (Online)
9. “PSG Design Data Book”, Compiled by the faculty of Mechanical Engineering, PSG College of Technology, March 2016, ISBN 978-81-927355-0-4
10. S. Madhankumar, M. Jishnu, J. Karthick Prithiv, S. Gowrishankar, S. Rajesh and R. Balamurugan, “Design and Modelling of Disaster Relief Vehicle using Rocker Bogie Mechanism”, International Journal of Innovative Technology and Exploring Engineering, ISSN: 2278-3075, pp. 1274-1276, Volume-8 Issue-6, April 2019.
11. T. A. Selvan, A. Viswanathan, S. Sneha and S. Madhankumar, “Automatic Flux Coating System”, Indian Journal of Science and Technology, pp. 1-7, Vol 12(19), May 2019.