International Journal of Recent Technology and Engineering (IJRTE)
ISSN: 2277-3878 (Online), Volume-8 Issue-2, July 2019

Digital Control System for Solar Power plant using IoT

Ganesh V. Karbhari, Pragya Nema

Abstract*: The Internet of Things (IoT) or Web of Things (WoT) is a modern technology which is relating computing machines with digital and mechanical devices and various objects. Today energy crisis is one of the major issues in the world. To overcome this issue, different renewable energy sources are being used. Nowadays solar energy has become a best alternative resource for satisfying power demands. Selected Solar power plant for implementation is of 1 MW capacity and generating power of 1.5 Million units per year with the use of Poly crystalline type of solar panel technology. Currently this power plant is monitored by PLC. All records of energy can be monitored only at plant on SCADA Device. In this Proposed work, we develop a model of online solar power monitoring as well as controlling so authorized person can monitor or control panels remotely by home also. As per the change in the atmospheric or weather conditions, user can control the solar panels also.

***Index Terms*: IoT (Internet of Things), Solar energy, SCADA, PLC etc.**

I. INTRODUCTION

Nowadays the use of various renewable energy sources, especially solar energy and wind energy has been tremendously increased .The prices of this renewable energy equipment are decreased due to advancement of technologies motivating huge scale solar photovoltaic installations. As most of the newest products in IoT are applied for the consumer industry, smart grids are used for all your energy need solutions. Visit at "Dr. Babasaheb Ambedkar solar thermal power plant, Osmanabad, Maharashtra, India" is beneficial for collecting detailed information about solar photovoltaic plant. Basic required terms are heterogeneous network for communication of objects, required hardware of each object, and processing / computing power of each object and security of each element in the IOT. The online monitoring of the solar energy power plant can have carried out for displaying the power and energy usage. In this Proposed work, We are going to develop a model of online solar power monitoring as well as controlling so authorized person can monitor or control panels remotely by home also. The parameters of performance will highly enhance by using the IoT based Technology for observing and controlling solar photovoltaic plant. Internet of things is a combination of various technologies. With present infrastructure and facilities, internet of things is useful to sense and control the parameters remotely. The monetary benefits, accuracy, performance can be highly enhanced with use of IoT technology.

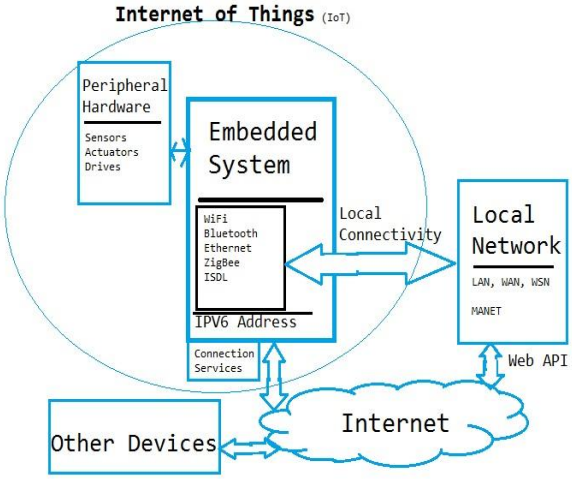

Fig.1. Internet of Things (IoT)

Fig. 1 explains the functioning of IoT. IoT will make a tremendous impact in the retail industry.

II. TRADITIONAL METHODS FOR SOLAR PLANT MONITORING

There has been lot of work already done with solar power monitoring using PLC, SCADA, Zigbee, Bluetooth, LOWPAN and other technologies. Here we are categorizing this review in two sections; one is methods used for monitoring and second is controlling methods of solar power plant. Here some traditional methods are discussed in detail. MPTTs are depending on Zigbee modules. Single host controller is used to gather all information and records for the low price manufacturing. The method of gateway is combined with GPRS [6] and solar panels used to modify all in an intelligent systems using Internet of Things. Wireless Sensor Networks and Internet of Things are getting more concentrated to smart environments and our day to day life as they are being used for health, facility and security applications. Smart grid provides the additional modifications in information and communication technologies to beneficial to a more reliable and appropriate electricity system.

Revised Manuscript Received on 30 July 2019.
* Correspondence Author
Ganesh V. Karbhari, ECE, Oriental University, Indore, India.
Dr. Pragya Nema, ECE, Oriental University, Indore, India.

In case study [13], difficulties with non-intrusive load monitoring type technique are discussed in details and especially for security applications. For implementing the cost effective Data Acquisition System with continuous tracking of performance parameters and to provide remote energy, various concepts are discussed in paper [14]. All the solutions and results of this work can be used for direct access of generated electric power at the rural sites. The method proposed having both the hardware and software. The photovoltaic type of module discussed in case study [3] in the technology can monitor the sun continuously, after that the maximum sun energy will be achieved, which has effectively modified the utilization ratio of solar energy and efficiency of photovoltaic power generation system. Telecommunication plants can be monitored remotely has been developed and started various procedures in it, also in paper [12] suggested about such integrated system. Main Key features of these systems [12] are that they combine the remote monitoring functions and the management into the one system so it has modified user interfaces. Within wind turbines and solar panels, implementation of real time solar power monitoring infrastructure is also discussed [10].

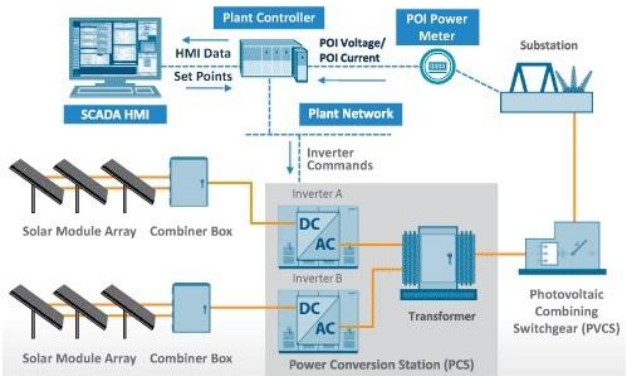

Fig.2. Solar power monitoring using PLC & SCADA

Further, the less cost android devices [5] can be replaced instead of LCDs which are graphical type devices. With advanced graphical visualization and screen touch user interface, internet modem RES Power Conditioning Unit (PCU) enhanced the capacity of system. This specific application requires Bluetooth interface and internet connection for the android Tablet or laptop. The PCU has a Digital Signal Processing section and Field Programmable Gate Array depending on digital platform with hardware and support of Bluetooth technology and serial communication protocols like UART. Applications like Smart city, smart environment and smart enterprise are also transformed to the present level to Internet of Things [15] system. In all atmospheric conditions, new type of PLC i.e. Delta PLC [16] is able to track and monitor solar system more accurately and process is also simpler.

III. PROPOSED METHOD

For the appropriate implementation and remotely access all the records of solar power plant, following methodology will be followed: Before manufacturing the proposed system based on IoT the different modules will be designed and simulated. After analyzing the results particular optimization will be considered. HTTP protocol over the LAN or Internet along with open source application of Internet of Things and API used to store and recollect data from various things.

Fig.3. Solar power monitoring using IoT-Hardware

An open source IoT application provides the creation of sensor logging applications and location tracking and monitoring applications, and a social type of network of things with status modifications. In this proposed work, a solar power panels are linked to sensors which are sensing voltage and current value. This sensed voltage value given as input to microcontroller, who displays all records and data on webpage. Microcontroller plays a very essential role in this process to intermediate between input modules and output modules. Once the system is successfully designed and simulated on the software it will be ready for fabrication. The proposed online control system using IoT will be manufactured.

IV. RESULTS AND CONCLUSION

The outcome of this work is to monitor, track and control the photovoltaic system i.e. solar panel arrays in solar power plants like voltage and the current values. This output will have sent those parameters to the created web page using LAN or internet facility. The proposed work is concern to tracking and monitoring of solar power panels with use of IoT , this tracking can be done over cloud. So data and panels can be handled at remote places also. This monitoring is carried out through controller using flask framework as interface. Physical devices are not connected these systems but can be controlled remotely through the internet connections. Smart tracking or monitoring of solar power plant will highly increase day by day use of renewable strength in solar power stations. This will help the user to analyze the power utilization, it impacts on the renewable power utilization and energy issues in solar power stations. Fig. 4 and 5 shows the software implementation of proposed method. All the records are remotely accessed by user through this created webpage.

This proposed work will enhance the efficiency of solar power stations to generate more power.

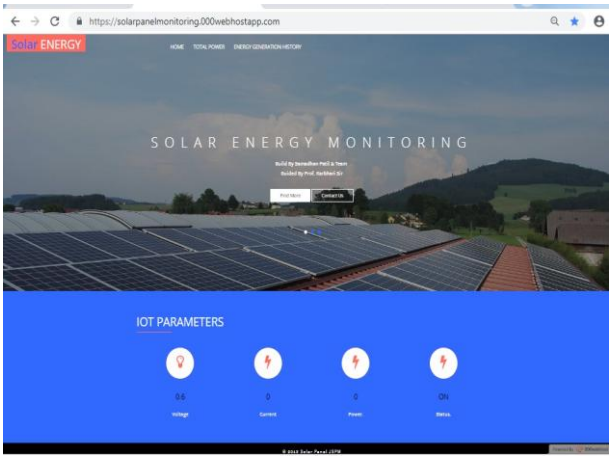

Fig.4. Online Monitoring of solar Plant using created Webpage

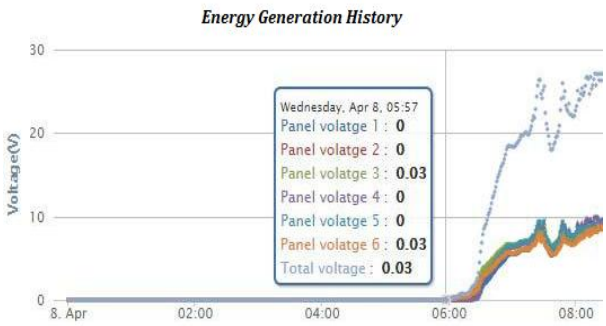

Fig.5. Energy database available on webpage

The graphical visualization of the collected information represents that all records will be available to authenticated user over cloud, so all panels and system can be monitored and tracked online with the help of IoT. Applications of tracking systems are in the Rooftop Solar panels; Ground mounted Solar panels, solar cities, Smart villages, smart environments, smart micro grids and Solar Street lights. This internet of things or web of things era finds many applications and so on. For the efficient energy management system, various traditional methods were used like PLC, SCADA, Bluetooth, Zigbee but IoT makes it easier to track the solar panels and remotely access all the records of Energy generated at solar power plant.

REFERENCES

1. A R Al-Ali, "Internet of Things Role in Renewable Energy Resources" Elsevier journal - Energy Procedia 100 (2016) Page No. 34-38, CPESE September 2016, Japan.
2. Vejihua, wang wen, "research and design of solar photovoltaic power generation monitoring system based on tiny os", august 2014, 9th international conference on computer science education.
3. Weiping Luo, "A solar panels automatic tracking system based on OMRON PLC" IEEE 2009 7th Asian Control Conference.
4. Sol Moon, Sung-Guk Yoon and Joung-Hu Park, "A New Low Cost Centralized MPPT Controller System For Multiply Distributed Photovoltaic Power Conditioning Module", November 2015, IEEE Transactions on Smart Grid
5. Jiju K, Brijesh P, Ramesh P, Sreekumari B, "Development of Android based on-line monitoring and control system for Renewable Energy Sources" presented in IEEE I4CT 2014.
6. Ravi Tejwani, Girish Kumar, ChetanSolanki, "Remote Monitoring System For Solar Photovoltaic Systems In Rural Application Using Gsm Voice Channel" 2013, ISES SolarWorld Congress.
7. Martín E. Andreoni Lopez, Francisco J. GaldeanoMantinan, and Marcelo G. Molina "Implementation of Wireless Remote Monitoring and Control of Solar Photovoltaic (PV) System" 2012 IEEE Conference Publications.
8. J. H. So, B. G. Yu, H. M. Hwang, G. J Yu and I. Y. Choi" Performance Monitoring and Analysis of Middle Scale Grid- Connected PV System'' october 2007,7th International conference on power electronics.
9. Purusothaman S.R.R. and Dhiwaakar et al., 2013. "Implementation of Anrduino-based multi-agent system for rural Indian microgrids." IEEE Innovative Smart Grid Technologies-Asia (ISGT Asia). IEEE, 2013.
10. Kabalci, Ersan, Gorgun A. and Kabalci Y., 2013. "Design and implementation of a renewable energy monitoring system." Power Engineering, Energy and Electrical Drives (POWERENG), Fourth International Conference on. IEEE, 2013.
11. Jiju K. et. al., 2014. "Development of Android based on-line monitoring and control system for Renewable Energy Sources." Computer, Communications, and Control Technology (I4CT), International Conference on. IEEE, 2014.
12. Yoshihiro G. et. al., 2007. "Integrated management and remote monitoring system for telecommunications power plants with fully DC-powered center equipment." INTELEC 07-29th International Telecommunications Energy Conference. IEEE, 2007.
13. Alexander S. and Galkin I., 2013. "Case study on using non-intrusive load monitoring system with renewable energy sources in intelligent grid applications." International Conference-Workshop Compatibility And Power Electronics.
14. Mayamiko N., Zennaro M. and Bagula A., 2011. "SM2: Solar monitoring system in Malawi" Kaleidoscope: The Fully Networked Human?-Innovations for Future Networks and Services (K-2011), Proceedings of ITU. IEEE, 2011.
15. Charithperera chi haroldliu, and srimaljayawardena,"The emerging internet of thing market place from an industrial perspective: a survey" December 2015, IEEE transactions on emerging topic in computing.
16. Betha Karthik Sri Vastav, Dr.Savita Nema, Dr. Pankaj Swarnkar, Doppllapudi Rajesh "Automatic solar tracking system using DELTA PLC" in 2016 International Conference on Electrical Power and Energy Systems (ICEPES).

AUTHORS PROFILE

Ganesh V. Karbhari is a Research Scholar, pursuing his Ph.D. degree in ECE at Oriental University, Indore, India. He received Master of Engineering degree in E&TC from S.P. Pune University. He received Bachelor of Engineering (Electronics) degree in 2013 from SRTMU, Nanded, MS, India. His research interests are Renewable Energy sources, Automation, Signal Processing etc.

Dr. Pragya Nema completed her Ph.D. in Energy System from Maulana Azad National Institute of Technology, Bhopal in 2010 and B.E. (Electrical Engineering) from Government engineering college, Sagar, in 1995. She completed her M.Tech. (Heavy Electrical Enginnering) from Maulana Azad College of Technology, Bhopal in 2001 and Her research interests are power system, hybrid energy system.