# Performanceon Measures of Bridgeless Epic Convertor and Boost Convertor Fed DC Drives

**D. Saranya, V. Krithika, A. Sivaranjani, T.V. Narmadha, K.C. Ajay, R. Roshan Melki Doss**

***Abstract---*** ***A bridgeless Single terminated Primary device (SEPIC) is projected foremost necessary blessings of this device unit of measurement continuous output current, smaller voltage ripple and reduced semiconductor current stress compared to the quality SEPIC device. The Bridgeless SEPIC convertor is employed to enhance the facility quality in terms of Power issue Correction (PFC), scale back the entire harmonic distortion (THD) at the input ac facet and output. Compare to per fluorocarbon with Bridgeless boost convertor that scale back the per fluorocarbon at the side of low output voltage. The high speed drive systems area unit abundant fascinated by the sphere of commercial applications because of the compact size, dependability and high potency. In recent, the strain of high speed drives area unit abundant accrued because of the mechanical blessings of high speed system. SRMs (Switched Reluctance Motors) have straightforward structure and inherent mechanical strength while not rotor winding and magnet. This paper conjointly presents to match the per fluorocarbon, Harmonic reduction, potency for each the converters. The projected bridgeless convertor consists of 2 switch and 2 diodes for every part is that the least range of switches among the convertors employed in the switch reluctance motor drive and conjointly this convertor performs high voltage for a bridgeless SEPIC convertor compare to the boost converter . The simulation results supported Matlab/Simulink computer code area unit mentioned very well during this paper.***

***Keywords--- SC-SEPIC Device, AC-Alternating Current, DC-Direct Current, THD-Total Harmonic Distortion, PFC-Power Issue Correction, SRM-Switched Reluctance Motor.***

## I. INTRODUCTION

In Recent the power quality issues area unit the foremost downside in our applications Switched Reluctance Motor has straightforward construction and low price that creates them compatible to several applications. because of its engaging options of high power density, high potency and low maintenance price ordinarily throughout a AC-DC device due to the switch device they were high voltage stress and in addition there is a presence of common mode noise due to interference throughout a devices to beat this issue, Bridgeless AC-DC converters area unit utilized within the sure application a combine of This halocarbon permits the minimum current flow through the switch device. But in Bridgeless Boost device have an obstacle that the DC output voltage is massive than the peak input voltage. Therefore inside the Bridgeless SEPIC device area unit extra economical than the standard circuit. During this device we have a tendency to tend to measure the doctorate, improve the power issue and reducing the harmonic distortion, ripple current and avoid interference circuit.

## II. BRIDGELESS SEPIC CONVERTOR FED DC DRIVES

In BRIDGELESS SEPIC fed SRM to beat these limitations in bridgeless boost device, the bridgeless single-ended primary-inductor device (SEPIC) is implemented. A bridgeless SEPIC is essentially a elevate device followed by a buck-boost device, thus it is the same as a traditional buck-boost device, but has edges of obtaining non-inverted output using a series condenser to couple energy from the input to the output (and thus can respond extra gracefully to a short-circuit output), and being capable of true ending once Figure1 switch is turned off, its output drops to zero V, following a fairly hefty transient dump of charge.

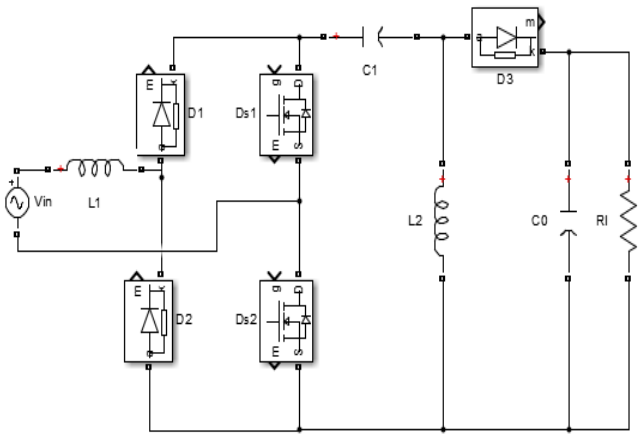


**Figure 1: Bridgeless SEPIC convertor**

Figure one Bridgeless SEPIC convertor fed SRM device a combine of favor.

### *1.1 Design Specification*

Table1 style specification for convertor In Table1 the look specification for a bridgelessSEPIC device area unit shown for a particular value.

**Manuscript received June 10, 2019.**

**D. Saranya,** UG Scholar, Department of EEE, St. Joseph's College of Engineering, Chennai, T.N, India.

**V. Krithika,** PG Scholar, Department of EEE, St. Joseph's College of Engineering, Chennai, T.N, India.

**A. Sivaranjani,** PG Scholar, Department of EEE, St. Joseph's College of Engineering, Chennai, T.N, India.

**Dr.T.V. Narmadha,** Professor, EEE Department, St. Joseph's College of Engineering, Chennai, T.N, India.

**K.C. Ajay,** PG Scholar, Department of EEE, St. Joseph's College of Engineering, Chennai, T.N, India.

**R. RoshanMelki Doss,** PG Scholar, Department of EEE, St. Joseph's College of Engineering, Chennai, T.N, India.



*Published By:*
*Blue Eyes Intelligence Engineering*
*& Sciences Publication*

**Table 1: The look specification for a bridgeless**

| s.no | Specification name | Rating |
|---|---|---|
| 1 | Main voltage range($V_{in}$) | 230V, AC |
| 2 | Line frequency($f_L$) | 50Hz |
| 3 | Output voltage($V_O$) | 460V |
| 4 | Output power rating($P_O$) | 20W |
| 5 | Switching frequency($f_s$) | 20kHz |

*Equation for SEPIC convertor*

$$V_c = \frac{V_{in}}{1-\delta} \text{.....} (1)$$

The electrical device Co were terribly massive and it'll use to attenuate the voltage ripple,

$$C_0 = \frac{P_o}{4fLV_O\Delta V_O} \text{.....} (2)$$

While mistreatment the duty quantitative relation

$$V_{out} = \frac{\delta}{1-\delta} V_{in} \text{.....} (3)$$

*1.2 Simulation of BridgeleessSepic Convertor*

The simulation of bridgeless SEPIC device circuit diagram is shown in Figure2. From the simulation results, it's clear that the input voltage and input current area unit just about partially and conjointly the facility issue is high. For identical input supply voltage of 230V, the bridgeless device supply the output of 530V and conjointly the ripple current is reduced.

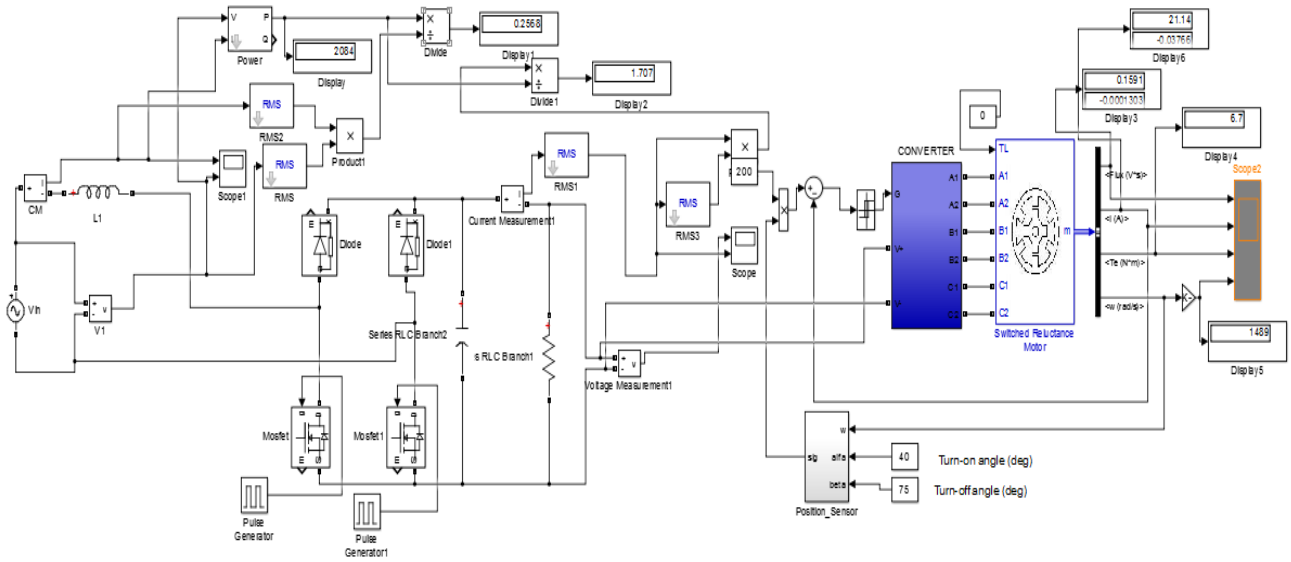


**Figure2:Simulink model of Bridgeless SEPIC convertor fed SRM**

Figure {2|two|a combine of} a pair of Simulink model of bridgeless SEPIC device fed SRM compared to ancient halocarbon circuits the physical phenomenon loss area unit reduced throughout a SEPIC device. The system simulation and its circuit operation area unit mentioned.

*1.3 Output Waveform*

*(A)Output Voltage and Current Waveform*

In bridgeless SEPIC halocarbon circuit has been presented inside that the input diode bridge rectifier is removed and thereby the amount of conducting parameter is reduced.

*Output Voltage*

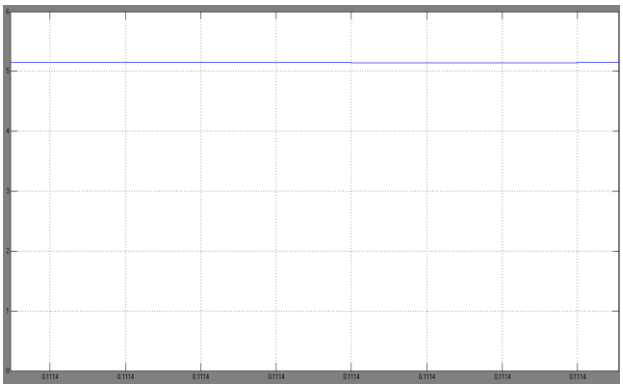

*Output Voltage*

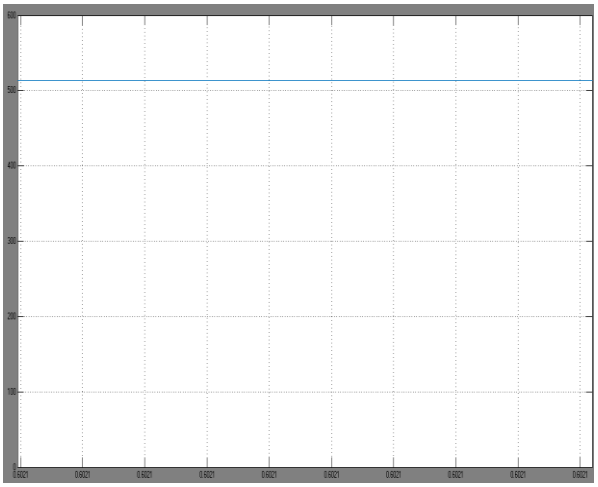

**Figure3: Output voltage and current of Bridgeless SEPIC device**

The device topology was simulated inside the MATLAB/ SIMULINK code for validation of topology. In Figure three the output voltage and current of bridgeless sepic convertor has 5.3A and 530V severally.



*Published By:*
*Blue Eyes Intelligence Engineering*
*& Sciences Publication*

The eight elements were conducted throughout each zero.5 cycle compared to ancient halocarbon circuit the physical phenomenon losses area unit reduced from the simulation results, it's known that the input voltage and input current area unit just about partially and conjointly the facility issue is high.

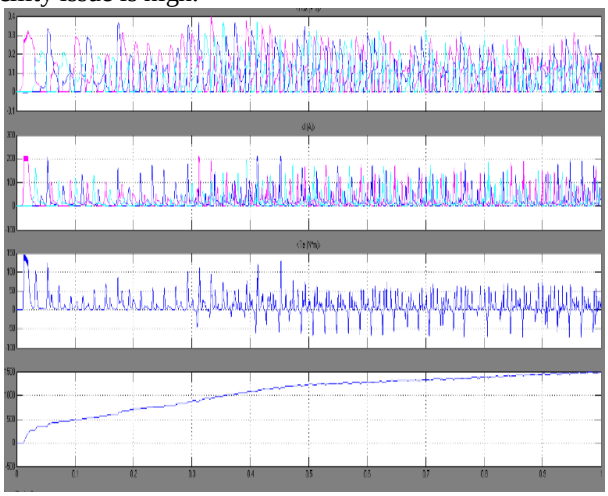

**Figure4: Speed -torque characteristic for SRM motor mistreatment bridgeless SEPIC convertor**

The on top of Figure4 is shown as bridgeless SEPIC convertor fed SRM motor. The output wave form implies that current and force ripple produces is reduced throughout simulation compared to traditional system is shown within the Figure4.The outputs area unit displayed taking flux, current, force and speed with relevancy time.

The bridgeless SEPIC convertor has been designed and simulated mistreatment MATLAB. The assorted parameters that the converters area unit designed area unit tabulated in table 2.

**Table2: Parameter specification for SRM drives**

| S.no | Parameter | Rated value |
|---|---|---|
| 1 | Speed | 1495.21 |
| 2 | Average flux | 0.088 |
| 3 | Average current | 20.256 |
| 4 | Torque | 23.73 |

The on top of Table two contains the specification of SRM drives are given.

*1.4 Harmonic Spectrum*

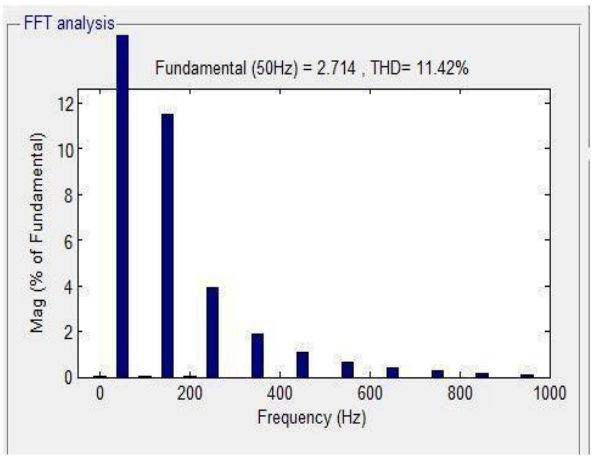


**Figure 5: Harmonic Spectrum for Bridgeless SEPIC device**

In Figure five harmonic spectrum for bridgeless SEPIC device the doctorate is 11.4 and conjointly the FFT value may be a combine of 0.714Hz. This circuit would be best suited to be used as a switch mode power supply application for low power instrumentality notably those requiring high quality input power.

*1.5 Total Harmonic Distortion*

In Table2 a combine of the power issue and doctorate at fully completely different 100W area unit shown. The load is decrease and conjointly the Doctor of Theology were exaggerated from this analysis and conjointly the facility issue decreases slightly with the decrease in load.

The feedback circuit for the device is in addition designed. The input to the power circuit is 230V fifty cycle per second AC. The circuit was designed for 100W load.

| LOAD | THD(%) | POWER FACTOR |
|---|---|---|
| 100w | 10.45 | 0.9938 |
| 75w | 10.89 | 0.9932 |
| 50w | 11.65 | 0.9924 |
| 25w | 15.45 | 0.9900 |

Table 2 Doctor of Theology and Power issue at fully completely different a hundred W for bridgeless SEPIC device

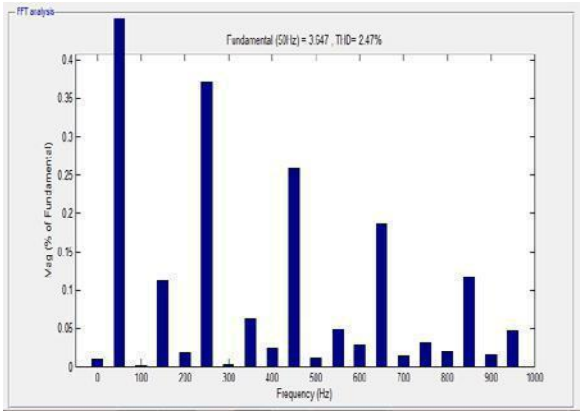


**Figure 6: Doctor of Theology for Bridgeless SEPIC device**

The Doctor of Theology for Figure six Doctor of Theology shows higher efficiency and voltage stress were reduced throughout a bridgeless SEPIC device.

## III. BRIDGELESS BOOST CONVERTOR FED DC DRIVES

Bridgeless AC-DC Boost convertor fed dc drives is employed to convert the AC (Alternating Current) voltage to DC (Direct Current) voltage while not mistreatment bridges. In traditional boost convertor solely the variable DC voltage is born-again to needed DC voltage, however here AC is directly born-again to DC. Boost convertor itself indicates that the output voltage is a smaller amount than the input voltage.


*Published By:*
*Blue Eyes Intelligence Engineering*
*& Sciences Publication*

The output voltage strictly depends on the shift frequency of the facility device and conjointly it depends on the ON time of the frequency (i.e. Duty cycle).

*2.1 Simulation Analysis for Bridgeless Boost Convertor Fed Dc Drives*

The bridgeless boost device fed SRM has disadvantage of obtaining larger common mode noise than the alternative device. But simply just in case of bridgeless boost device output ground connected to AC provide through the body diode of switch entirely throughout positive zero.5 cycle, whereas throughout negative zero.5 cycle the output.

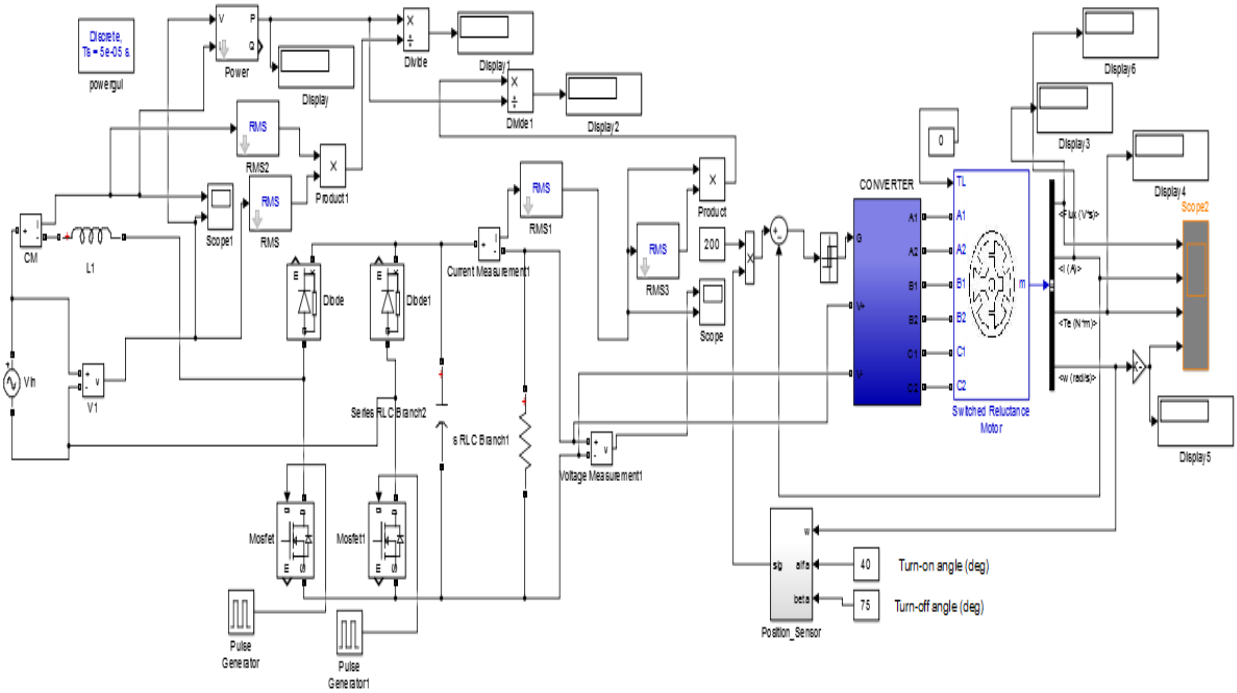


**Figure7: Simulink model of bridgeless boost device**

In Figure seven the Simulink model of bridgeless Boost device fed SRM is meant by Simulink model mistreatment MATLAB.

*2.2 Design Specification*

**Table 3: style specification for boost device**

| S.NO | SPECIFICATION | RATING |
|---|---|---|
| 1 | Main voltage vary | 230V,AC |
| 2 | Line frequency | 50Hz |
| 3 | Output voltage | 280V |
| 4 | Output power rating | 10W |
| 5 | Shift frequency | 10kHz |

In Table three the boost device data specification is mentioned.

*Equation for boost Converter*

The duty cycle of boost device is

$$Duty\ Cycle = 1 - \frac{Vin}{Vo} \quad (4)$$

The condenser price is

$$\Delta V = ESR\left(\frac{Io}{1-D} + \frac{\Delta ILnew}{2}\right) = 2.622\times10^{-3}V \quad (5)$$

The inductance price is

$$L = \frac{Vs \times D}{fs \times \Delta Io} \quad (6)$$

*2.3 Output Waveform*

*Output Voltage& Results*

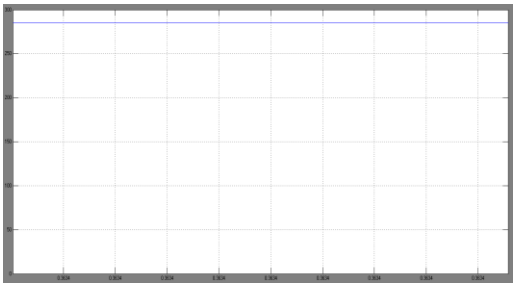

In on top of Figure 8 the output voltage is 280V is measured.

*Output Current*

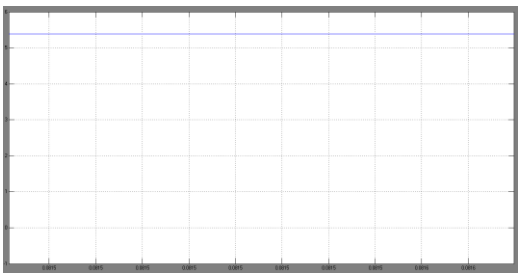

In on top of Figure 8 the output current is 5A is measured.


*Published By:*
*Blue Eyes Intelligence Engineering*
*& Sciences Publication*

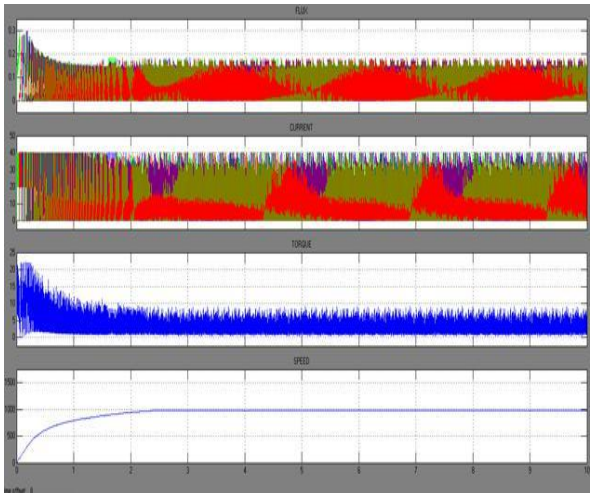

**Figure8: Simulation results of control system Bridgeless boost convertor a).Flux, b).Current, c).Torque, d).Speed**

The output parameters of flux, current, force and speed area unit shown in Figure nine. Throughout steady state operation, the flux is zero.3 flux unit with most current of 40A. The force developed by motor is twenty N-m with a speed of 1400 revolutions per minute.

*Total Harmonic Distortion*

In Figure nine, Doctor of Theology result for bridgeless boost device contains extra harmonic distortion.

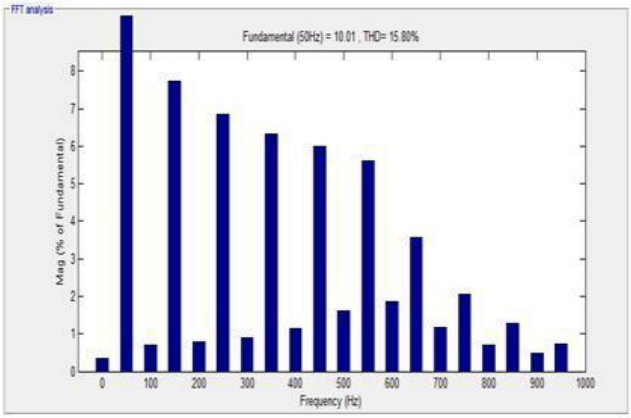


**Figure 9: Doctor of Theology result for bridgeless boost device fed SRM LOAD**

**Table4: Doctor of Theology and power issue at fully completely different load for bridgeless boost device fed SRM**

| LOAD | THD (%) | POWER FACTOR |
|---|---|---|
| 100w | 115.42 | 0.9345 |
| 75w | 101.76 | 0.9938 |
| 50w | 92.31 | 0.9929 |
| 25w | 84.20 | 0.8654 |

In Table four the Doctor of Theology and power issue for numerous load bridgeless boost device is calculated. Compared to bridgeless SEPIC device the boost device power issue is improbably less and ineffective.

*Comparison Results for Convertors*

On the comparison for the bridgeless SEPIC and boost device fed SRM have same input voltage, different output voltage and efficiency is measured and compared at intervals the tabulation given below Table five. For the input voltage of 230V, the output voltage from a Bridgeless SEPIC device is 530V and 280V for BOOST device. The speed of the SRM will be accurate in a SEPIC convertor as 2000rpm compare to BOOST converter as 1450rpm.

**Table5: Comparison results for Bridgeless converters topology**

| Type of converters | Input voltage | Output voltage | THD | Efficiency |
|---|---|---|---|---|
| SEPIC | 230V | 530V | 2.417 | 98% |
| BOOST | 230V | 280V | 15.235 | 82% |

Therefore the voltage stress in SEPIC device is high as compared to the boost topology.

## IV. CONCLUSION

On the on high of results, for the same input supply voltage of 230 V, the Doctor of Theology is V-day for BOOST device and a few of for SEPIC device. The speed is accurate and efficiency of the drive is high. The facility issue is 0.99 for a bridgeless SEPIC device and for boost device 0.8.Based on the configuration and simulation, the SEPIC device is useful for exploitation it in motor application.

## REFERENCES

1. Al-Saffar M.A., Ismail E.H., Sabzali A.J., and Fardoun A.A., “An Improved Topology of SEPIC device With Reduced Output Voltage Ripple,” IEEE Trans. Power lepton., Vol. 23, No. 5,Sep2008.
2. Choi W.-Y., Kwon J.-M., Kim E.-H., Lee J.-J., and Kwon B.-H.,“Bridgelessboost rectifier with low natural phenomenon losses and reduced diode reverse recoveryproblems,” IEEE Trans. Ind. Electron.,vol.54, no. 2, pp. 769– 780, Apr. 2007.
3. Do H.-L., “Soft-switching SEPIC device with ripple-free input current,” IEEE Trans. Power lepton., vol. 27, no. 6, pp. 2879–2887, Jun.2012.
4. Archangel Tibola and Ivo Barbi , “Isolated Three-Phase High Power issue Rectifier supported the SEPIC device operative in Discontinuous natural phenomenon Mode,” IEEE Trans. Power lepton., Vol. 28, No. 11, Nov 2013.
5. Ismail E. H., “Bridgeless SEPIC rectifier with unity power issue and prune natural phenomenon losses,” IEEE Trans. Ind. Electron., vol.56, no. 4, pp. 1147–1157, Apr. 2009.
6. Jang Y., and Jovanovic M. M., “Bridgeless high-power-factor buck device,” IEEE Trans. Power lepton., vol. 26, no. 2, pp. 602–611, Feb.2011.
7. Mahdavi M., and FarzanehfardH.,“Bridgeless SEPIC halocarbon rectifier with reduced components and physical phenomenonlosses,” IEEE Trans. Ind. Electron.,vol. 58, no. 9, pp. 4153–4160, Sep. 2011.
8. Sabzali A. J., Ismail E. H., Al-Saffar M. A., and Fardoun A. A., “New bridgeless DCM SEPIC andCUK halocarbon rectifiers with lowphysical development and switch losses,” IEEE Trans. Ind. Appl., vol. 47, no. 2, pp.873–881,Mar./Apr.2011.
9. Shaid M. R., Yatim A. H.M., and Taufik T., “A new ac–dc device usingbridgeless SEPIC,” in Proc. Annu Conf. IEEE Ind. Electro.Society, 2010,pp.286–290.
10. Yang J-W., and Do H-L., “Bridgeless SEPIC device with a Ripple-Free Input Current,” IEEE Trans. Power lepton., Vol. 28, No. 7, July 2013.


*Published By:*
*Blue Eyes Intelligence Engineering*
*& Sciences Publication*