Numerical and Experimental Investigation of Vibration Isolation of Three-storied Building Structure using Tuned Mass Damper

Shrinivas Hebbar A, Shrinidhi D Kulal, Tajmul Pasha, Prasanta Kumar Samal, K Gourav

Abstract*: A tuned mass damper (TMD) is a passive energy dissipating device which is comprised of a mass, spring and a damper. The idea behind this type of dampers is that if a smaller mass is attached to the multiple degrees of freedom system and its parameters are tuned precisely, then the oscillation of the whole system can be reduced by this smaller mass. In this work, different dampers of different frequencies were designed and integrated with the three-storied building frame model to minimize its first mode of vibration along x-axis at a frequency of 3Hz. The best suitable damper was determined through the numerical analysis was then fabricated and tested for the validation of the result. It was found that for the TMD of 3Hz the reduction in the response of the structure was found to be around 83.72%.

Index Terms*: Tuned Mass Damper (TMD), Modal Analysis, Harmonic Analysis, Fast Fourier Transform (FFT).

I. INTRODUCTION

Every system in the universe tends to acquire equilibrium position when it is disturbed from its mean position. This phenomenon is called vibration. Hence Vibration can be defined as a mechanical phenomenon where, oscillations occur about an equilibrium point [1]. The oscillations may be periodic, such as the motion of a pendulum or random, such as the movement of a tire on a gravel road. Vibration can be desirable. However, in many cases, vibration is undesirable, wasting energy and creating unwanted sound. Careful designs usually minimize unwanted vibrations.

Mainly the vibration can be classified as free vibration and forced vibration. Free vibration occurs when a mechanical system is set in motion with an initial input and allowed to vibrate freely. The mechanical system vibrates at one or more of its natural frequencies and damps down to motionlessness. The natural frequency is the frequency at which a system tends to oscillate in the absence of any driving or damping force or it can also be defined as the frequency or frequencies, at which an object tends to vibrate when hit, struck, plucked, strummed or somehow disturbed.

Revised Manuscript Received on December 22, 2018.

Shrinivas Hebbar A, Department of Mechanical Engineering, The National Institute of Engineering, Mysore, India.

Shrinidhi D Kulal, Department of Mechanical Engineering, The National Institute of Engineering, Mysore, India.

Tajmul Pasha, Department of Mechanical Engineering, The National Institute of Engineering, Mysore, India.

Prasanta Kumar Samal, Department of Mechanical Engineering, The National Institute of Engineering, Mysore, India.

K Gourav, Department of Civil Engineering, The National Institute of Engineering, Mysore, India.

Forced vibration is when a time-varying disturbance (load, displacement or velocity) is applied to a mechanical system. The disturbance can be a periodic and steady-state input, a transient input, or a random input. The periodic input can be a harmonic or a non-harmonic disturbance. For linear systems, the frequency of the steady-state vibration response resulting from the application of a periodic, harmonic input is equal to the frequency of the applied force or motion, with the response magnitude being dependent on the actual mechanical system.

II. BACKGROUND

Urbanization, coupled with modern design and construction technologies, has resulted in complex types of machinery, taller and lighter structures. As an example, the world's tallest man-made structure the Burj Kalifa tower stands a remarkable 828m from its base with an estimated weight in excess of 110,000tones [2]. One of the trade-offs of building to larger heights is the susceptibility to vibration due to the inherent flexibility of the structure. When excited by environmental dynamic loads, such as wind, this could result in large amplitude motion at the top of the structure

There are two significant negative effects from structural vibrations on building structures [3]. The first effect is the long-term fatigue to structures due to the periodic dynamic loading. It is well established that the leading cause of material failure in building structures is due to fatigue. Building materials, such as metals, subjected to periodic loadings can develop fractures [3]. The presence of a fracture jeopardizes the structural integrity, and may inevitably lead to structural failure. The second effect is the human perception of the induced motion. Humans are very perceptive to even minor vibrations. Sensitive people can perceive accelerations as low as 0.05g [4]. Between 0.1g and 0.25g structural motions may affect an individual's ability to work, and over the long term, it may lead to motion sickness [4].

The desire then is to mitigate structural vibrations in building structures. The control of structural vibrations can be achieved by various methods [5]. The amplitude and frequency of structural vibrations can be manipulated by modifying the structural mass, stiffness, shape and damping. Adding additional bracing will also stiffen the structure and reduce building sway [5]. Alternatively, the addition of passive or active stabilizing forces on the structure from an external dampening device can also be implemented to mitigate the effect of structural vibrations [6]. One such example is the tuned mass dampener (TMD). TMDs

Published By:
Blue Eyes Intelligence Engineering
& Sciences Publication

operate by providing additional dampening to the building structure. They are advantageous over conventional design methods-especially for taller lighter construction since they are economical and can be implemented as an add-on to existing or new structures. An example of such a structure is the Taipei 101, the second tallest man-made structure in the world. The skyscraper stands 508 m above ground level in a region which experiences strong winds, ground vibrations, and typhoons [7]. Design elements of the structure include three TMDs, one of which is a pendulum TMD and the largest TMD in the world at 660tones [7]. The architectural design of the structure also incorporates saw-tooth corners which reduce the effect of vortex-shedding, a major contribution to building sway. Despite its widespread use, conventional TMD designs have several major drawbacks. Specifically, the performance of any passive TMD is reliant on the selected modal frequency of the structure [8] [9] [10].

A. Tuned Mass Damper (TMD)

Vibration isolation is the process of isolating an object, such as a piece of equipment, from the source of vibrations. Vibrations propagate via mechanical waves and certain mechanical linkages conduct vibrations more efficiently than others. There are two main types of vibration isolators. They are Passive and Active Vibration isolators. Passive vibration isolation makes use of materials and mechanical linkages that absorb and damp these mechanical waves. Tuned Mass Damper (TMD) is a type of Passive Vibration Isolator. Active vibration isolation involves sensors and actuators that produce disruptive interference that cancels-out incoming vibration.

A TMD has three basic elements: mass, stiffness, and energy dissipation (damping), so there are three forms of tuning required in the design of a TMD. The stiffness and mass of the TMD are selected to provide a TMD resonance frequency very close to the structure's resonance frequency. It is reasonable to expect the TMDs to provide about a 70% reduction in the vibration. Although there are several different implementations of the TMD design, the four most common types of TMDs used are translational TMDs, pendulum TMDs (PTMD), semi-active TMDs (SATMD), and active TMDs. Roughly speaking, practical systems are tuned to either move the main mode away from a troubling excitation frequency or to add damping to a resonance that is difficult or expensive to damp directly.

B. Operating Principle of TMD Systems

TMD's are used in structures primarily to prevent the discomfort of the structure's occupants and, in some cases, to augment the fatigue life [4]. There are several different topologies of TMD systems. The simplest topology is the passive TMD which contains a mass, a spring, and a dissipative energy device such as a damper [11]. When the TMD is tuned close to the structural mode of interest, the TMD will resonate out-of-phase with the structure, and the resulting vibration energy will be dissipated by the damper to the environment as heat.

In physics, damping is any effect that tends to reduce the amplitude of vibrations. In mechanics, the internal friction may be one of the causes of such damping effect. For many purposes the damping force F_f can be modelled as being proportional to the velocity $\dot{x}$ of the object.

$$F_f = -c * \dot{x} \tag{1}$$

where 'c' is the damping coefficient in units of Newton-seconds per meter (Ns/m) [11].

The design of a TMD system is generally constructed as an optimization problem [11]. Optimization is the determination of system parameters which maximize the performance based on a performance criterion (also known as an objective function). For large scale structures, the structural mass can exceed 100,000 tones [7]. Since the mass ratio is generally within a fraction of the total structure mass, the ability to contain such a mass within the structure becomes a practical concern [11]. As a result, mass ratios of TMD assemblies for large building structures typically fall below 1%.

III. Numerical Analysis

A. Model under consideration

For the Study we have considered a three storied building frame model which can be subjected to harmonic base motions. The three-story shear building consisting of rigid floors supported on deformable columns is considered for the analysis as it imitates the real-world building. It has four base plates each with dimensions 300x150x12.7 mm and four columns each having cross section 3*25.11 mm and 300mm in length. The entire structure is made of Aluminum having density 2700 kg/m^3. We have modelled our model using Solid Works 2015 as shown in Fig. 1 and converted the same into. iges (Initial graphics exchange specification) format.

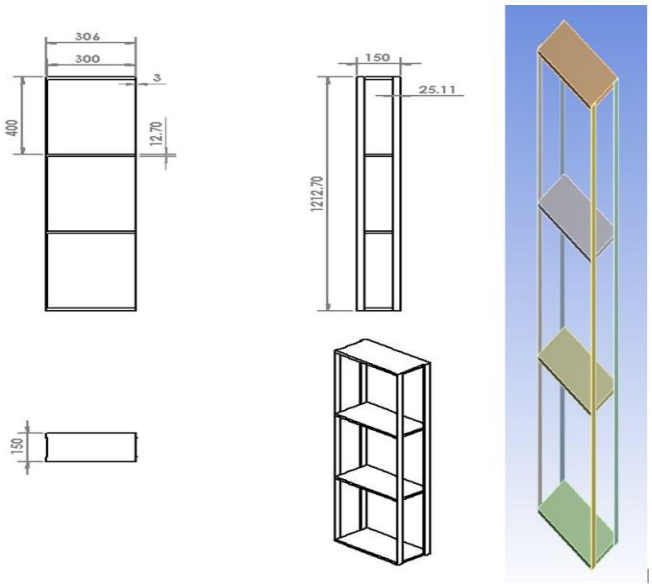

Fig.1. Dimensions of the structure under consideration and its isometric view

B. Modal analysis of Structure in ANSYS

A modal analysis determines the vibration characteristics (natural frequencies and mode shapes) of a structure or a machine component. It can also serve as a starting point for another, more detailed, dynamic analysis, such as a

Published By:
Blue Eyes Intelligence Engineering
& Sciences Publication

transient dynamic analysis, a harmonic analysis, or a spectrum analysis [13]. The natural frequencies and mode shapes are important parameters in the design of a structure for dynamic loading conditions. Thus, by using this analysis we are able to get natural frequencies of the system, along with different modes and corresponding deformations. And at present, our objective is to study the deflection of the structure along the x-direction.

In ANSYS using design modeller, we have imported the model and linked the same into the mechanical workbench under modal analysis, meshed and solved. The fully constrained model was assigned with Aluminum, the mesh elements used were hexahedrons and the element quality was 92% on an average, meshing was done using Multizone method using which we can fully control the elements used. Initial condition used was the bottom of the structure was fixed so that the structure acts like a cantilever and the solution obtained are given below.

1) Geometry

TABLE I. GEOMETRIC PROPERTIES

Material	
Assignment	Aluminium
Bounding Box	
Length X	306. mm
Length Y	1212.7. mm
Length Z	150. mm
Properties	
Volume	2.6514e+00 6 mm³
Mass	7.1588kg

2) Mesh

TABLE II. MESH CONTROLS

Method	Multizone
Type of Element	Hexahedrons
Statistics	
Nodes	16220
Element	1928

3) Solution

Using ANSYS we found the natural frequency of the structure for five modes and the corresponding deflection were plotted, our objective is to study the behavior of the structure in x-direction only, which corresponds to first mode of vibration as shown in the figure at 2.966Hz and the corresponding deflection being 17.414mm. The deformations of the structure for different modes are shown in the Fig. 2.

TABLE III. DIFFERENT MODES OBTAINED WITH CORRESPONDING FREQUENCIES

Mode	Frequency [Hz]
1.	2.9666
2.	8.3661
3.	12.183
4.	18.716
5.	28.151

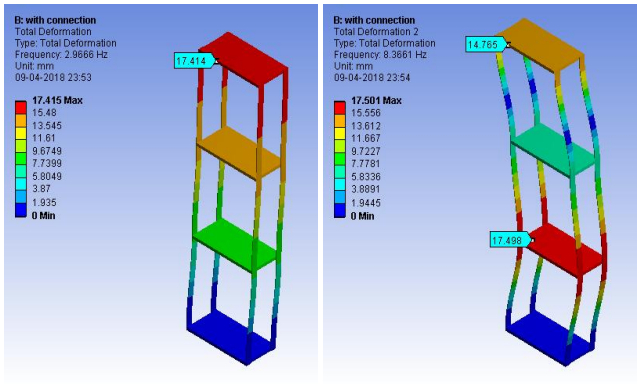

Mode 1 Mode 2

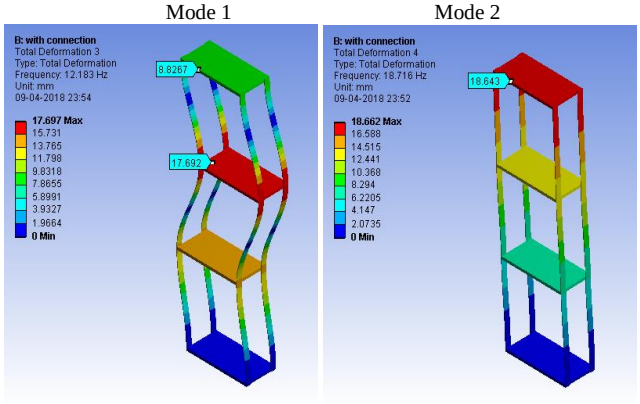

Mode 3 Mode 4

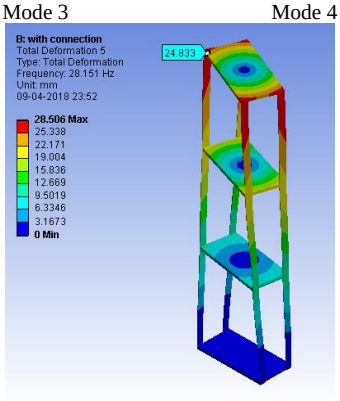

Mode 5

Fig. 2. Deformation of the structure for different modes of vibration

C. Modal Analysis of the Tuned Mass Damper in ANSYS

The tuned mass dampers may be of different types like Mass and Coli Spring, Mass and Flexure and Pendulum type dampers. Initially, we designed a pendulum type tuned mass damper, but the problem with this type is that it can be used only for the structures with very low natural frequency,

$$f = \frac{1}{2\pi}\sqrt{\frac{g}{l}} \; in\ Hz \qquad (2)$$

Because as it is dependent on the length of the pendulum, which decreases with increase in frequency. Hence, we came up with a different configuration which is similar to that of Mass and Flexure type.

The damper which we adopted is similar to Mass and Flexure damper and the model is as shown in the Fig. 3, which basically has two mass blocks of 60*70*70 mm. and have a column of 3*25 mm cross section and have length of 300mm. The damper was modelled in Solid works 2015 and then was converted into. iges format. This was imported into ANSYS modal workbench to

determine the natural frequency of the damper.

The tuned mass damper was imported into Modal Analysis workbench and the analysis was done with the same condition as above. And the deflection of the TMD along x - direction was to be 17.792 mm and the frequency was found to be 3.0665Hz as shown in Fig.4.

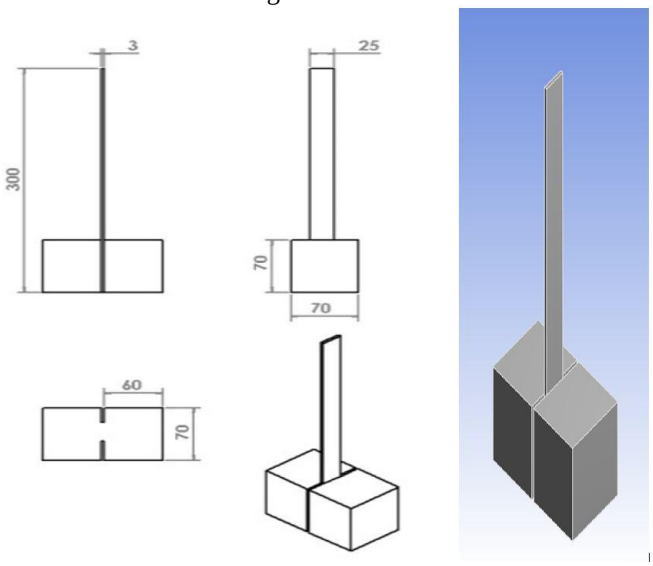

Fig. 3. Dimension of the Tuned Mass Damper and its isometric view

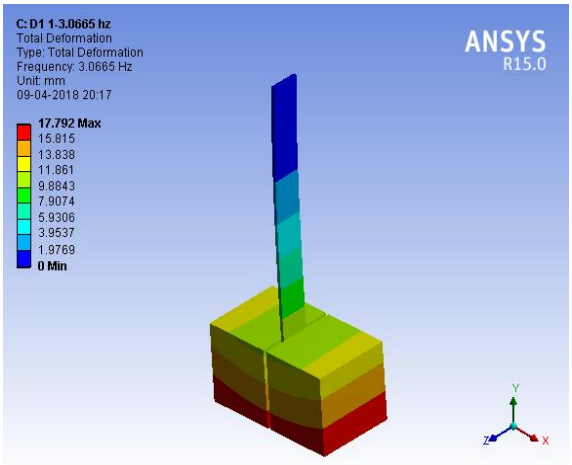

Fig. 4. Deformation of the TMD along x-direction

D. Modal Analysis of Structure with Tuned Mass Damper

The above modeled damper was then integrated into the structure and the Modal Analysis was performed using the same boundary conditions as shown in the Fig.5.

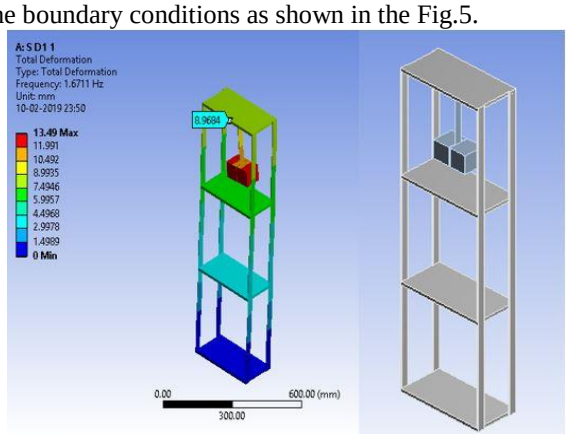

Fig. 5. Deformation of the structure with TMD along x-direction

E. Harmonic Analysis

Harmonic analysis is used to determine the steady state response of the linear structure to loads that varies sinusoidally (harmonically) with time, thus enabling us to verify whether or not the designs will successfully overcome resonance, fatigue and other harmful effects of forced vibrations.

1) Load Conditions

The Load conditions used for the harmonic analysis and the point of application of the load is shown in this section.

TABLE IV. FREQUENCY RANGE USED FOR THE HARMONIC LOAD

Frequency Range	Use Parent
Minimum Frequency	0. Hz
Maximum Frequency	15. Hz
Solution Intervals	300
Type	Force
Define By	Components
X Component	10. N
Y Component	0. N
Z Component	0. N

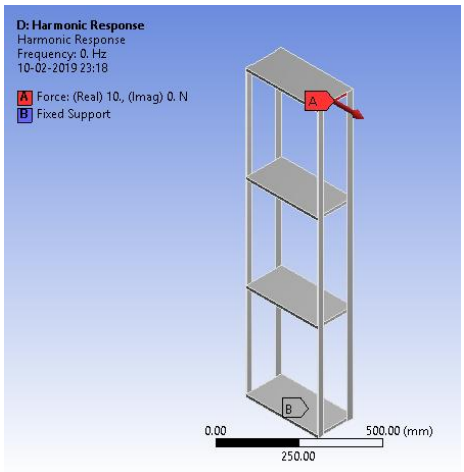

Fig. 6. Load condition used for Harmonic Analysis

2) Harmonic Analysis of the Structure

When the Harmonic analysis was carried out using the above load conditions and the frequency response of the structure was found as shown in Fig. 7 and the maximum amplitude was found to be 1406 mm at 3 Hz.

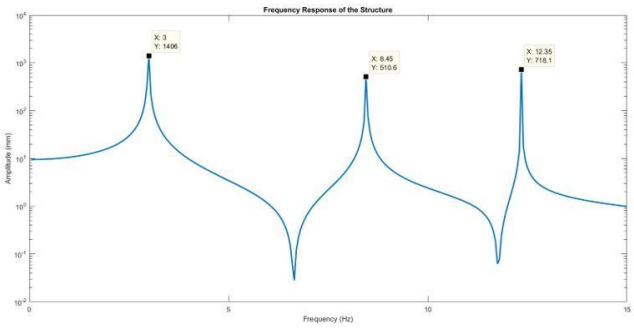

Fig. 7. Frequency response of the Structure

Published By:
Blue Eyes Intelligence Engineering
& Sciences Publication

3) Harmonic Analysis of the Structure with TMD

Similarly, when the structure is integrated with the Tuned Mass Damper, the Frequency response was found to be as shown in Fig. 8 and the maximum amplitude was found at 1.65Hz and 4.8Hz and the corresponding deflection were found to 292.9 mm/s^2 and 2345 mm/s^2 respectively.

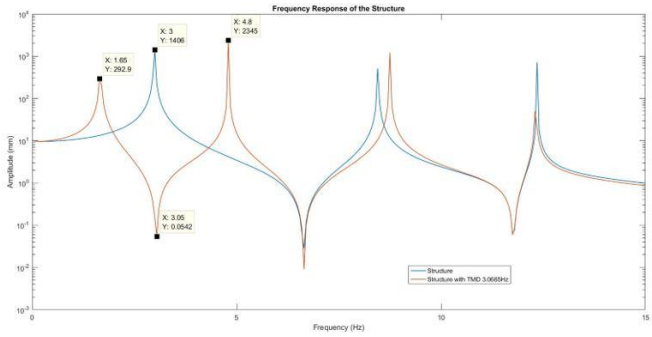

Fig. 8. Frequency response of the Structure with TMD

F. Result and Discussion

Dampers of different frequencies, varying from 2Hz to 12Hz were modelled, by varying the stiffness of the dampers. The result formulated is given in TABLE V based on the deformation of the structure with TMD as shown in Fig. 9. When the frequency of the TMD is varied and the deflection of the structure are plotted we arrive at a graph as shown in Fig.10.

TABLE V. DEFLECTION OF THE STRUCTURE WITH TMD FOR DAMPERS OF DIFFERENT STIFFNESS

Structure with TMD	Frequency of the TMD (Hz)	Deflection of the Structure with TMD(mm)
1	1.9757	6.1772
2	2.22	6.6737
3	2.4217	7.425
4	2.5158	7.492
5	2.954	9.1794
6	3.0665	8.9685
7	3.4315	10.117
8	4.2385	10.597
9	4.4775	10.932
10	4.5758	11.392
11	4.9306	12.034
12	5.4546	12.562
13	5.5475	13.403
14	6.1622	13.414
15	6.2387	12.846
16	7.3297	13.875
17	7.9338	15.19
18	8.392	14.608
19	10.879	16.171
20	11.626	10.091

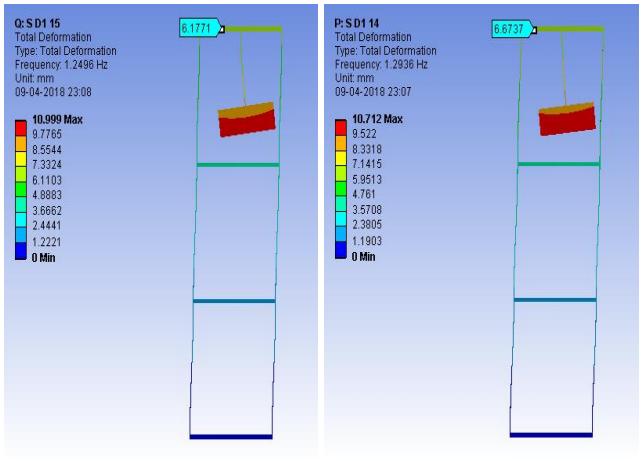

TMD 1

TMD 2

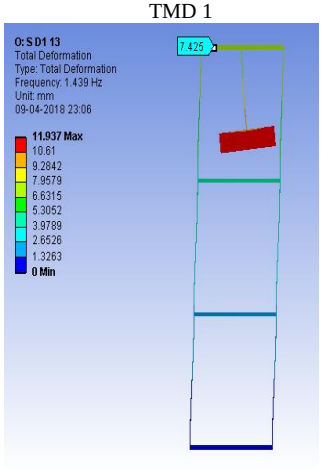

TMD 3

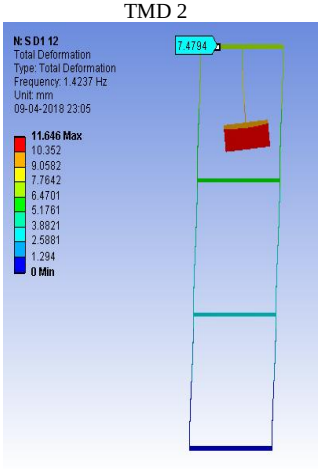

TMD 4

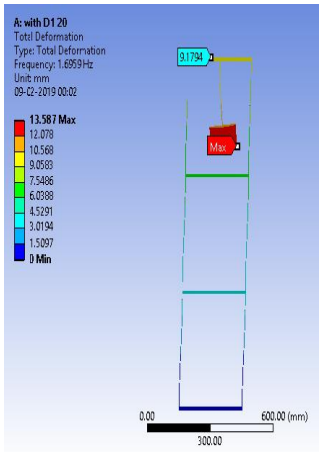

TMD 5

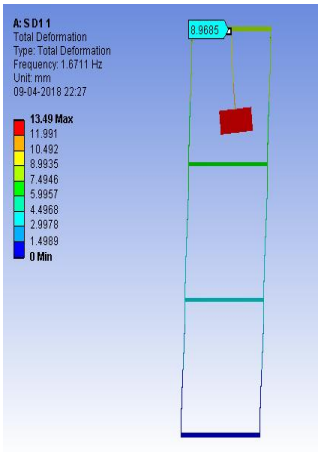

TMD 6

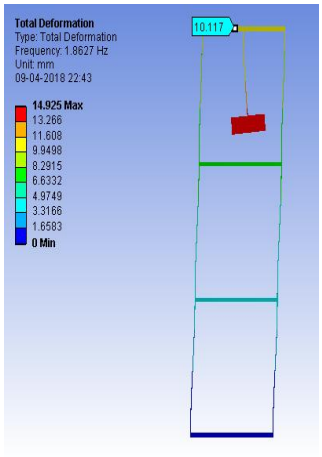

TMD 7

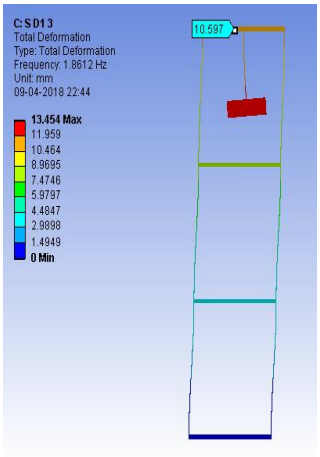

TMD 8

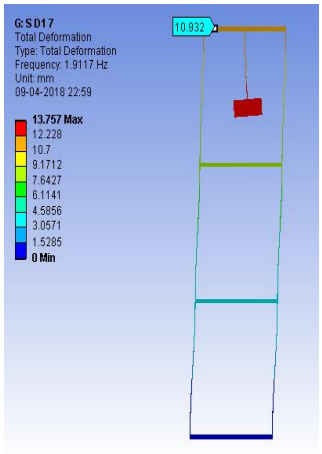

TMD 9

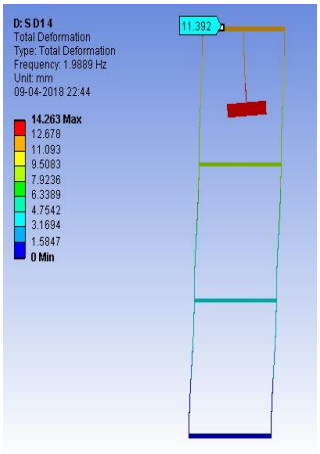

TMD 10

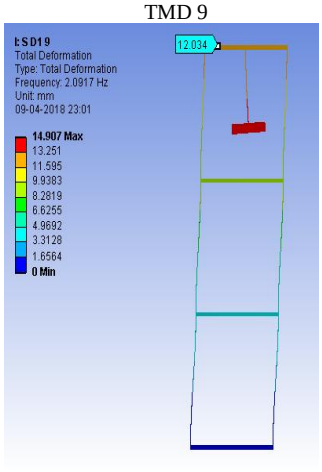

TMD 11

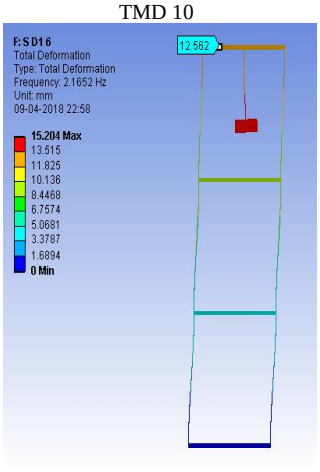

TMD 12

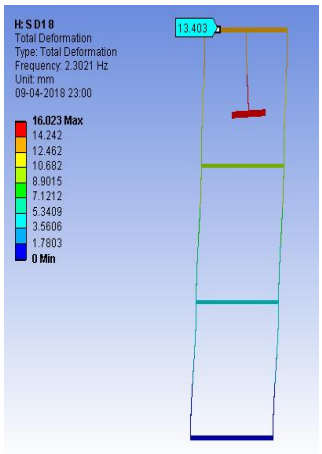

TMD 13

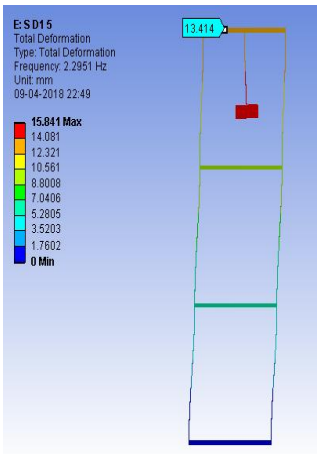

TMD 14

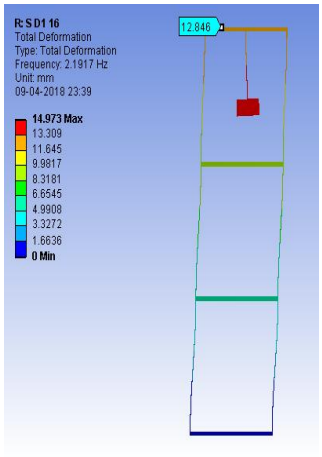

TMD 15

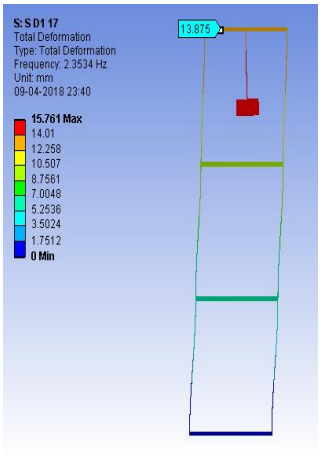

TMD 16

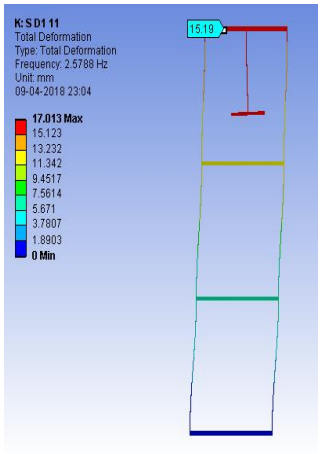

TMD 17

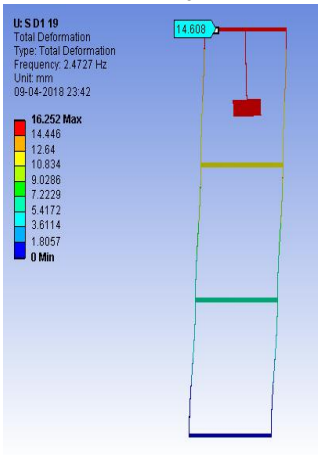

TMD 18

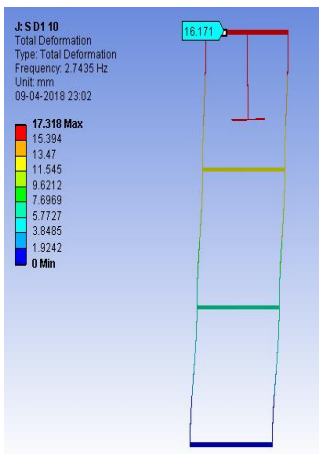

TMD 19

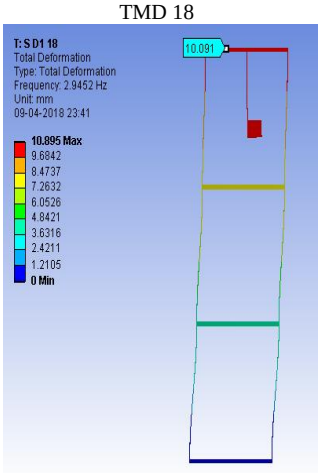

TMD 20

Fig. 9. Deformation of the structure with TMD of different frequencies

Published By:
Blue Eyes Intelligence Engineering
& Sciences Publication

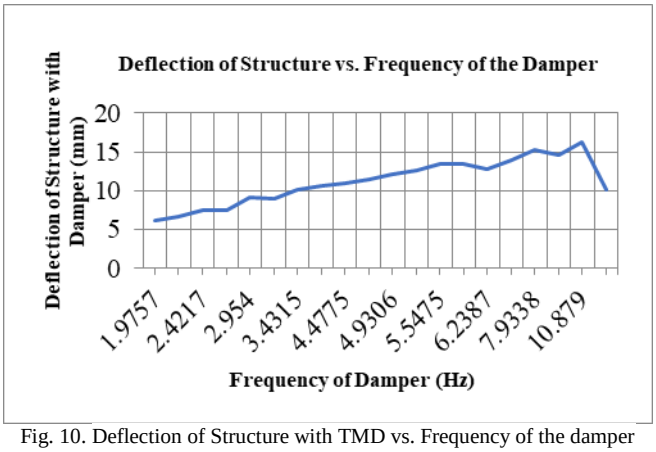

Fig. 10. Deflection of Structure with TMD vs. Frequency of the damper

It was found that, when the damper with 2.954Hz and 3.0655Hz was used, deflection of the structure was found to be 9.1794mm and 8.9685mm which was practically the maximum possible reduction that could be obtained compared to the other dampers. While the dampers below 2.954 Hz offer better reduction in the deflection of the structure, but they are not suitable because their mass is very high compared to that of the structure itself. hence, they are practically infeasible.

From the Harmonic analysis of the Structure and Structure with the Tuned Mass Damper of 2.954Hz and 3.0665Hz. The result obtained can be plotted in same graph as shown in Fig.11.

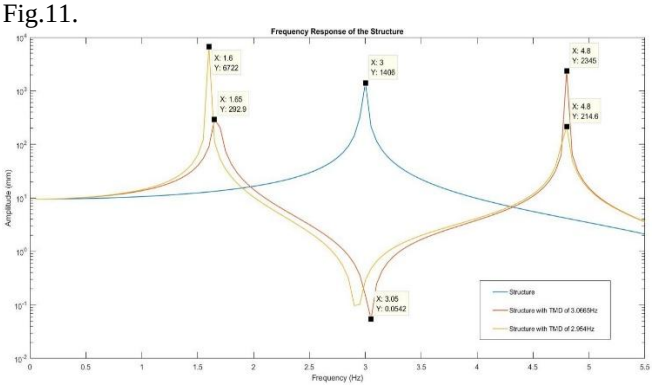

Fig. 11. Frequency response comparisons

From the above graph, When TMD with 2.954Hz was used with the Structure it has to undergo a high resonance in the way to reach its working frequency which is not feasible. Therefore, the Damper with 3.0665Hz offers the best available damping among the alternatives by reducing the deflection of the structure from 17.414mm to 8.9685mm i.e. offering a percentage reduction of about 48.49%.

From the above results we can clearly observe that the vibration of the structure when integrated with the Tuned Mass Damper is successfully absorbed and the resulting natural frequency of the integrated structure is not in the working range of the Structure.

IV. EXPERIMENTAL ANALYSIS

The methodology followed for data acquisition and the test setup are as shown in the Fig.12 The Structure was rigidly attached to the base exciter which had a range of 0-15Hz but the practical achievable was around 12Hz. Impact Hammer test was performed and the PCB tri axial accelerometer 100mV/g having a range of 2Hz to 5KHz was mounted on the top plate of the structure with the help of NI DAQ 9234 the system was interfaced to LabView in order to determine the response of the system, then the TMD was attached to the structure and the behavior of the system was recorded. The data acquired was processed using MATLAB to infer the results.

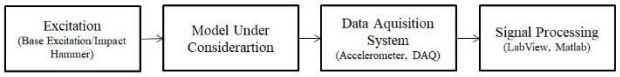

Fig.12. Methodology for data acquisition and the test set-up.

A. Experimental analysis of the structure

The Structure was excited using the base exciter by Sweep test from 2-10Hz to look for the mode shapes. Impact Hammer test was performed and the time domain response of the system and the FFT of the Signal is Represented in Fig.13, From preliminary inspection using the Sweep test the first mode of vibration i.e. the maximum deflection of the Structure was found to be around 2.7-3.1Hz and the second mode of vibration is found at 7.4-8Hz. From Impact hammer test using the frequency response we can infer the first mode is at 3Hz having a deflection of 0.009233 m/s^2 and second mode is at 8Hz and the third mode is at 12Hz which agrees well with the FEA results as in TABLE I.

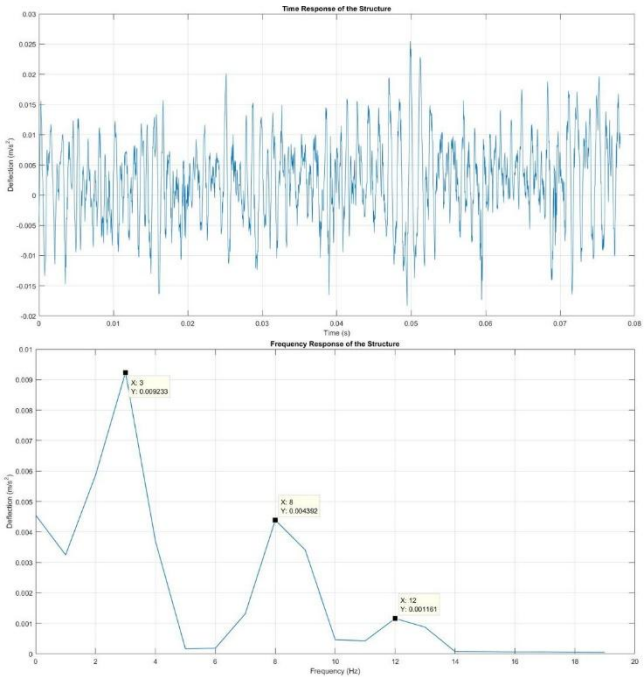

Fig.13. Time and Frequency response of the Structure

B. Experimental analysis of the damper

Based on the numerical analysis we fabricated the tuned mass damper using Mild Steel and its response was determined using the test setup as shown in the Fig.14, and the

Published By:
Blue Eyes Intelligence Engineering
& Sciences Publication

natural frequency of the damper was found using impact hammer analysis. Sledge hammer was used to produce the impact. The time domain response of the damper and the FFT of that signal in as in Fig.15. The first mode and the frequency corresponding to the same is 3Hz which agrees well with the FEA results as discussed earlier.

Based on the numerical analysis we fabricated the tuned mass damper using Mild Steel and its response was determined using the test setup as shown in the Fig.14, and the natural frequency of the damper was found using impact hammer analysis. Sledge hammer was used to produce the impact. The time domain response of the damper and the FFT of that signal in as in Fig.15. The first mode and the frequency corresponding to the same is 3Hz which agrees well with the FEA results as discussed earlier.

C. Experimental analysis of the structure with TMD

The TMD was integrated with the Structure as shown in the Fig.16. and the response of the structure was studied. The time domain and the frequency domain response of the system are as shown in Fig.17.

Fig. 14. Test Setup for determining its natural frequency.

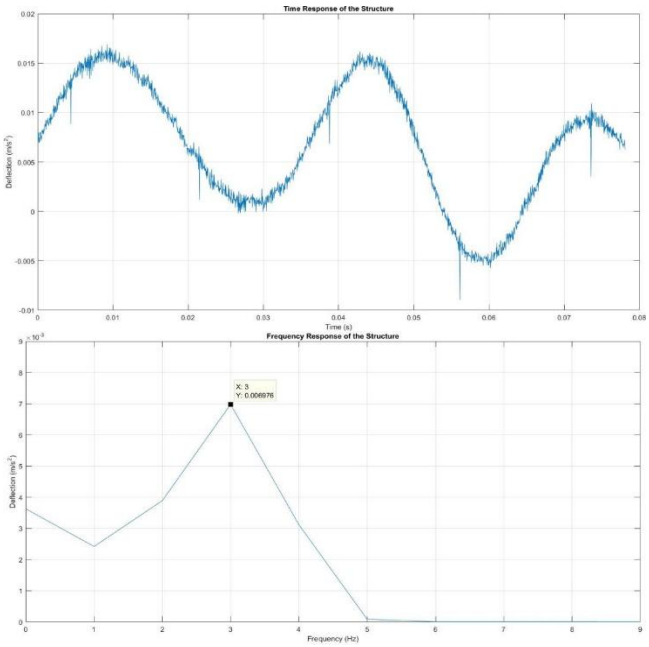

Fig. 15. Time and Frequency Response of the Damper

Fig. 16. Structure with the TMD mounted rigidly on test setup.

From Fig. 17. we can infer that the response of the system at 3 Hz i.e. at its first mode of vibration has reduced to 0.001568 m/s^2 i.e. percentage reduction of 83.722% and it has split into frequency of 2 Hz and 5Hz which agrees very well with the FEA results as shown in Fig. 8.

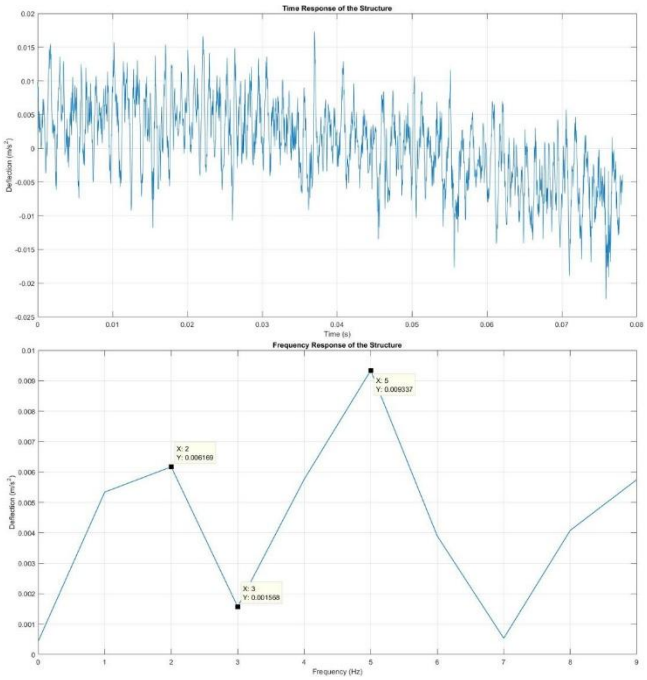

Fig. 17. Time and Frequency response of the Structure with TMD

V. Conclusion

The objective of the paper was to reduce the vibration of the structure using passive vibration absorber. We considered a three-storied structure with deformation in the x-direction for our analysis. The same was modelled and analyzed, several dampers of different frequencies were also modelled and integrated the same with the structure, Modal Analysis and Harmonic Analysis were performed using FEA software ANSYS. From TABLE V and Fig. 10. we can infer that, when the damper with 3.0665Hz was used, the deflection of the structure along x-direction is found to be 8.9685mm, which is the best possible option compared to the rest and the reduction in the deflection is around 48.87%. From Harmonic Analysis we can infer that the vibration of the structure was isolated at 3.0Hz as shown in Fig. 8. and the amplitude of the resulting natural frequencies were well below that of the amplitude of the structure at its natural frequency. Hence, we can validate that when the frequency of the damper is

Published By:
Blue Eyes Intelligence Engineering
& Sciences Publication

nearly same as that of the required natural frequency of the structure the vibration can be significantly reduced. Then the TMD was fabricated and whose first natural frequency was found to be 3.0Hz using impact hammer test. It was then integrated with the structure and the response of the system was measured using NI DAQ. It was found that the TMD was successful in mitigating the response of the system at its first natural frequency as shown in Fig. 17. It was found that there was 83.722% reduction in the response of the system at 3Hz, which in accordance with the FEA results.

VI. FUTURE WORK

We have only considered the passive isolators and the variation of the structure for the damper with different stiffness. The drawback of the passive isolator is that it is effective only for the particular tuned frequency and in case of detuning it may result in adverse condition. In future work, we can vary the mass and the damping coefficients of the damper and integrate it with active damping systems which will result in more efficient damping. The active system has two advantages over the passive system. First, it will outperform the equivalent passive system under detuning condition [12]. Secondly, the active system is capable of optimizing its transient performance.

ACKNOWLEDGMENT

We would like to present our sincere gratitude to Mr. Tajmul Pasha (Associate Professor) and Mr. Prasanta Kumar Samal (Assistant Professor), Department of Mechanical Engineering, and Dr. K. Gourav, (Assistant Professor), Department of Civil Engineering, National Institute of Engineering, Mysore for their valuable guidance.

REFERENCES

1. Design, Construction and Testing of an Adaptive Pendulum Tuned Mass Damper By Richard Lourenco A thesis presented to the University of Waterloo in fulfilment of the thesis requirement for the degree of Master of Applied Science in Mechanical Engineering Waterloo, Ontario, Canada, 2011 ©Richard Lourenco 2011
2. Baker, W.F., Korista, S., and Novak, L.C., 2007. Burj Dubai: Engineering the World's Tallest Building, *The Structural Design of Tall and Special Buildings*, 16(4), pp.361-375
3. Sain, T., and Chandra Kishen, J.M., 2007. Prediction of Fatigue Strength in Plain and Reinforced Concrete Beams, *ACI Structural Journal*, 104(5), pp.621-628
4. Kareem, A., Kijewski, T., and Tamura, Y., 2007. Mitigation of Motion of Tall Buildings with Specific Examples of Recent Applications, *Wind and Structures*, 2(3), pp.201-251
5. Mendis, P., Ngo, T., Haritos, N., Hira, A., Samali, B., and Cheung, J., 2007. Wind Loading on Tall Buildings, *Electronic Journal of Structural Engineering*, 7(Special Issue), pp.41-54
6. Gerges, R.R., and Vickery, B.J., 2005. Optimum Design of Pendulum-Type Tuned Mass Dampers, *The Structural Design of Tall and Special Buildings*, 14(4), pp.353-368
7. Tamboli, A., Joseph, L., Vadnere, U., and Xu, X., 2008. Tall Buildings: Sustainable Design Opportunities, In: Council on Tall Buildings and Urban Habitat, *CTBUH 8th World Conference*, Dubai, March 3-5
8. Chang, M.L., Lin, C.C., Ueng, J.M., and Hsieh, K.H., 2010. Experimental Study on Adjustable Tuned Mass Damper to Reduce Floor Vibration Due to Machinery, *Structural Control and Health Monitoring*, 17(5), pp.532-548
9. Clark, A.J., 1988. Multiple Passive Tuned Mass Dampers for Reducing Earthquake Induced Building Motion, Proceedings of the 9th World Conference of Earthquake Engineering, 5, pp.779-784
10. Setareh, M., 2002. Floor Vibration Control Using Semi-Active Tuned Mass Dampers, *Canadian Journal of Civil Engineering*, 29(1), pp.76-84
11. Conner, J.J., 2003. *Introduction to Structural Motion Control*. Pearson Education Inc.
12. Nishimura, T., Kobori, T., Sakamoto, M., Koshika, N., Sasaki, and K., Ohrui, S., 1992. Active Tuned Mass Damper, *Smart Materials and Structures*, 1(4), pp.306-311
13. Introduction to Modal Analysis (https://www.sharcnet.ca/Software/Ansys/17.2/en-us/help/wb_sim/ds_modal_analysis_type.html)
14. Tuned mass dampers in Skyscrapers (http://practical.engineering/blog/2016/2/14/tuned-mass-dampers-in-skyscrapers)

AUTHORS PROFILE

Shrinivas Hebbar A, Student in National Institute of Engineering, Mysore. Interested in Vibration and Dynamics.

Shrinidhi D Kulal, Student in National Institute of Engineering, Mysore. Interested in Vibration and Dynamics.

Mr.Tajmul Pasha is Associate Professor in the Department of Mechanical Engineering. He has received his M.Tech from VTU and B.E. from Bangalore University. His teaching and research interests are in the field of Production/Management/Renewable Energy.

Mr. Prasant Kumar Samal is Assistant Professor in the Department of Mechanical Engineering. He has received his M.Tech in Machine Design from the Indian Institute of Science-Bangalore. His teaching and research interests are in the field of Machine Design.

Dr. K. Gourav is Assistant Professor in the Department of Civil Engineering. He has received his M.Sc. Engg. &Ph.D from Indian Institute of Science (IISc), Bangalore and B.E. from Visvesvaraya Technological University (VTU),Belagum. His Teaching and Research interests are in the field of Structural Engineering. His specific research interests are Structural masonry, Alternative Building Materials and Structural Dynamics & Earthquake Engineering.

Published By:
Blue Eyes Intelligence Engineering
& Sciences Publication