International Journal of Recent Technology and Engineering (IJRTE)
ISSN: 2277-3878 (Online), Volume-8, Issue-1, May 2019

Effect of Bypass Diode under Partial Shading in SPV Module: A Review

Kavita Singh, Tarana Afrin Chandel, Saif Ahmad

Abstract*: Sun is the source of energy that is inexhaustible, renewable, and plentiful in nature. This energy can be used for the generation of electricity. Therefore, we require solar photovoltaic process to convert energy into electricity by using solar modules. Due to some obstacles including sudden change in weather, shadowing, etc., solar module does not receive standard irradiance. Shadowing on the module enormously affects the performance of solar module in generating power. In this paper, we have reviewed many papers which show that the effect of partial shading can be reduced by using bypass diode. Thus, power can be enhanced by the use of bypass diode and improved power can be attained.

***Index Terms*: Solar Photovoltaic, Shading, Solar Irradiance, Bypass Diode**.

I. INTRODUCTION

Solar energy seeks great attention due to its abundance in atmosphere. Also it is eco-friendly because it does not produce harmful substances and thus avoiding the degradation of environment. In our daily lives, the form of energy which is widely used is the electricity. With the grown population, the demand of electricity is gradually increasing and it becomes almost impossible to fulfill the need of this demand by the conventional energy sources. Also the conventional energy sources are limited in amount and also produce harmful pollutants which degrade the environment. To overcome with these problems the solar power is a good option. The sun is available for approximately 7 to 8 hours a day during the summer. Earth do not receive the overall sunlight because some light is absorbed, some is scattered and reflected back to the atmosphere. The amount of solar energy received by earth can be used to accomplish the daily energy needs of the world. The device which is used to transform the sunlight into electric power is called as the solar module containing solar photovoltaic cells. The photovoltaic effect occurs on the exposure in sunrays on solar cell. These silicon solar cells operate between 0.5 to 0.6 volts [1]. Solar Photovoltaic (SPV) systems can have 36 cells, 72 cells and many more (according to the area of application) connected in series to produce more voltage. SPV system can produce more output during day time in a clear weather. SPV systems have number of advantages like they do not require any special care and maintenance. Another attractive and reliable feature is the life span of solar panels i.e. approximately 20-25 years [2]. Although SPV systems have number of advantages but they also have some demerits such as high installation cost and have negative impact of shading. Shading of panels occurs due to nearby buildings, trees, birds-excrements, by passing clouds, etc. Small amount of shading can results vast changes in the performance of PV modules. Solar cells connected in series to generate more power. If a single cell is shaded then the output of the other cell in that string is affected by this [3].

Revised Manuscript Received on 30 May 2019.
* Correspondence Author
Kavita Singh*, PG student, Department of ECE, Integral University, Lucknow, India.
Tarana Afrin Chandel, Associate Professor (Jr.), Department of ECE, Integral University, Lucknow, India.
Saif Ahmad, Assistant Professor, Department of ECE, Integral University, Lucknow, India.

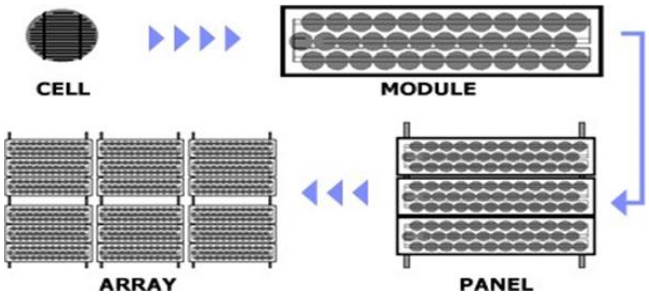

Fig.1. General View of Cell, Panel and Array [4]

The above Fig.1 shows the general structure of cell, modules, panels and arrays. The smallest unit is cell which combined together and forms modules, panels, and arrays.

Cell: PV cell converts the sunlight into direct current.

Modules: PV modules are made by the combination of cells. Cells can be tied-up together in series, parallel or in series-parallel composition to form a structure called module.

Panels: PV panels consist of one or more PV modules assembled together. PV panels are field installable unit.

Array: Photovoltaic array consist of individual panel or modules connected together to accomplish the necessity of voltage and current [4].

II. BASIC PV CELL MODEL

Solar modules are made by PV cell. PV cell works on the photovoltaic effect. Solar cell uses the semiconductor technology. The most commonly used material is silicon. The solar modules can be of Mono-crystalline silicon or poly crystalline silicon [5].

A basic PV cell model including a current source, a diode, a series and shunt (parallel) resistance is shown in Fig.2.

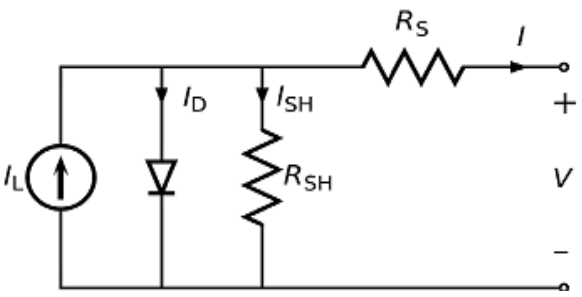

Fig.2 A basic PV cell model [3]

The basic equation of current from solar cell is expressed in equation (1) -

$$I = I_L - I_o(e^{\frac{V+IR_s}{N_s V_t}} - 1) - \frac{V + IR_s}{R_{sh}} \qquad (1)$$

Where V_t is called as Junction thermal voltage and expressed as-

$$V_t = \frac{AkT}{q} \qquad (2)$$

I_L- Photo-generated current,

Io - Dark saturation current,

Rs - Series resistance of panel

Rsh, - Shunt (or parallel) resistance,

k - Boltzmann's constant,

q - Electron charge,

N_s- Number of cells connected in series,

T- Cell Temperature (in degree Kelvin),

A- Diode quality (or Ideality) factor

The dark saturation current is very small as compared to the exponential term. Thus, the term '-1' in equation (1) can be neglected [3].

A. Current-Voltage (I-V) and Power-Voltage (P-V) relationship of photovoltaic modules in Ideal case:

In Fig.3 given below, the relationship between voltage, current and power are shown. I-V characteristic curve shows the relationship between the short circuit current (I_{SC}) and open circuit voltage (V_{OC}) and the P-V curve shows the relationship between the maximum power and voltage.[6].

Fig. 3 I-V and P-V characteristics curve (ideal case) [6]

i. (V_{oc}) Open Circuit Voltage : V_{oc} → Maximum Voltage, when Current in the cell is zero

ii. (I_{sc}) Short Circuit Current: I_{sc} → Maximum Current, when Voltage across the terminal is zero.

iii. (MPP) Maximum Power Point: It is the product of voltage and current. This is the maximum power occurring at the output of inverter.

$$MPP = V_{mp} \times I_{mp}$$

iv. Efficiency: The ratio of the maximum power that a module can produce to the amount of solar irradiance is defined as efficiency. It is given as-

$$\eta = \frac{V_{mp} \times I_{mp}}{P_{in}}$$

v. Fill Factor: It is the fraction of maximum power to the multiplication of open circuit voltage and short circuit current. It is given as-

$$FF = \frac{P_{max}}{V_{oc} \times I_{sc}}$$

B. Characteristic Curve of PV Modules under partial shading of module

The performance of PV modules is drastically affected by shading. The current will not flow through the module which is shaded and hence the overall current decreased because all the cells connected in series. This will result in reduced voltage and power as well. So, the shading of single cell affects the overall performance of the photovoltaic (PV) cell. Characteristics curves (both I-V and P-V), during partially shading are shown in the fig.4
below-

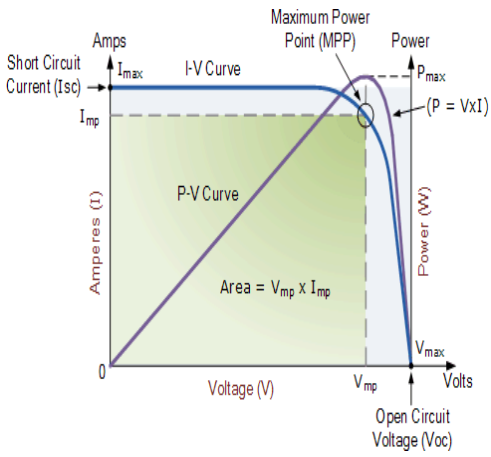

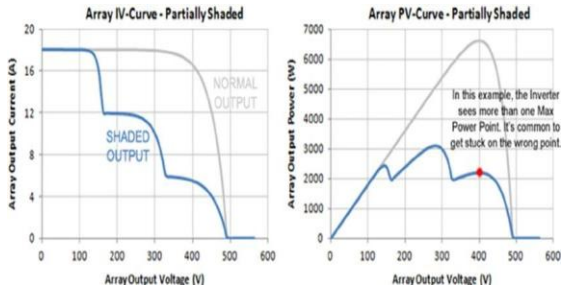

Fig.4 I-V and P-V Characteristic curves of PV cell (under partial shading of modules) [7]

III. IMPACT OF SOLAR IRRADIANCE AND TEMPERATURE ON SPV SYSTEM

The output of PV modules depends on the various parameters including solar irradiance, temperature, configuration of modules, and shading [8]. The solar irradiance gives the measurement of power per unit area received from sunlight. The value of irradiance according to the standard test conditions is 1000W/m^2. Solar insolation keep changing with the time and the characteristics curve (I-V and P-V curve) also changes respectively. The open circuit voltage and the short circuit current both will rise with the enhancement in solar irradiance [9, 10].

Temperature also results the variation in the performance of PV modules. The value of temperature is considered as 25˚C according to standard test conditions. With the increasing temperature, photon generation rate increases and hence the reverse saturation current also increases. This results in reduction of bandgap. Hence, the current is marginally affected by this and increases by approximately 0.0006mA/cm^2 with per degree rise in temperature but open circuit voltage changes significantly. With per degree rise in the temperature, the cell voltage reduced by the 2.2mV. The overall output is decreased by 0.005mW/°C [11].

IV. EFFECT OF PARTIAL SHADING

Shading of modules is undesired but occurred with many reasons including soil patches such as tree-leaves, dirt patches, bird-excrements, neighboring building, by passing clouds and any other means. The analysis of shading is important to get a higher output from the solar module. The overall output of the PV panels is affected by the shading. Shading of panels causes overheating of panels and hotspots are formed due to this, which leads to the damage of solar module. Shading can also results in mismatching loads. There may be two or more MPP point due to shading which create confusion in finding the original maximum power point. It is almost impossible to remove shading completely but it can be reduced to the minimum level and higher output can be achieved [7].The fig.5 shows the connection of bypass diodes with PV modules and the respective P-V curve under shading condition.

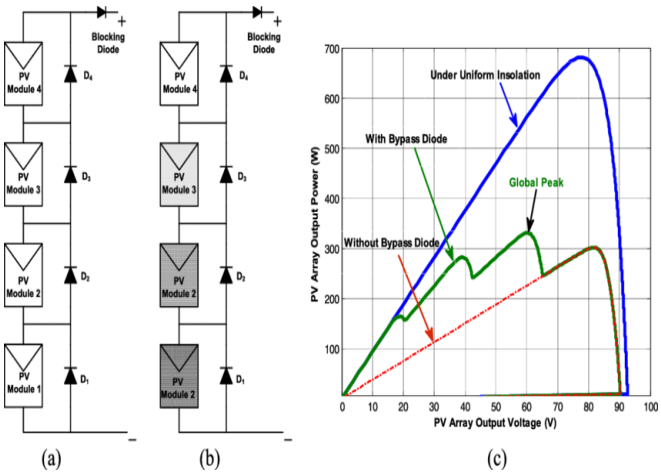

Fig.5 Interfacing of bypass diode with PV modules and working (a) under uniform solar radiation, (b) under shading of PV modules, and (c) P-V curve in shading condition [12]

V. IMPACT OF SOLAR IRRADIANCE AND TEMPERATURE ON SPV SYSTEM

There are two approaches that can be used to reduce the impact of shading on panel's output-

1. Using Bypass Diodes
2. Using DC-DC converters

1. Using bypass diode

Shading can be reduced by using the bypass diodes. The cells are arranged in series to obtain higher output from solar modules. The current from a cell passes to another cell in that string. If shading occurs it will prevents the current to pass through the shaded cell. Thus, the output of shaded cell is decreased. This problem can be overcome by using the bypass diodes connected between the two cells. Bypass diodes provide a different path to the current to flow from the panels. Fig.6 shows four solar modules with bypass diode. Module 1 and module 2 are un-shaded modules and module 3 and module 4 are shaded modules.

Un-shaded Modules

Shaded Modules

Current Flow

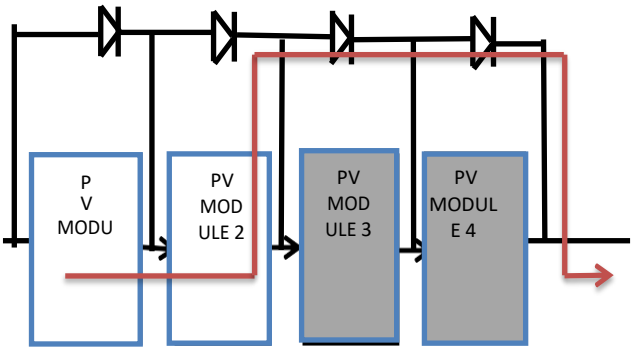

Fig.6. Bypass Diodes connected with solar modules [13]

Role of bypass diode: Bypass diodes play an extensive role to prevent solar modules from the effect of shading. In normal operation, when the modules are un-shaded, these diodes remains reverse biased and have no effect on the output. In shaded modules, these diodes become forward biased and provide a path for current to flow. By connecting more number of bypass diodes will surely help to improve the losses occurred by the shading of modules [7].

2. Using DC-DC Converter

DC to Dc converter is a device which is used to convert the one level of DC input voltage to another level of DC output voltage. These converters play a major role in conversion of energy in the solar photovoltaic system. PV modules are made by combination of solar cells and the collective modules make solar array. DC-to-DC converters convert the low DC power from the modules to the high power required by the utility grid. In the off grid system there are battery backups which are used to fulfill the demand even when the grid supply is not present. These batteries are charged by the solar panels. The irregular supply from the panels will damage the batteries. Thus, the DC-DC converter can regulate/stabilizes this power and increase the battery life span [14].

DC-DC converters have different topologies that are used to enhance or reduce the level of input DC voltage according to the required application. The topologies are as under-

a) DC-DC Boost Converter
b) DC-DC Buck Converter
c) DC-DC Buck-Boost Converter

Difference between DC-DC boost converter, DC-DC buck converter and DC-DC buck-boost converter:

All three converters have some similarities and some differences. They all require same components but the only difference occurs due to their operation. Boost converter requires larger inductance as compared to buck converter. In case of buck converter higher and costly capacitor is required to remove the discontinuity from input current of PV module and make it simpler. For the application of PV systems, the combination of boost and buck converter is used and called as DC-DC buck-boost converter. It provides the most effective solution for the tracing of maximum power point in a PV system [15].

VI. CONCLUSION

In this review paper, the impact of shadowing on PV module's performance is analyzed. The various methodologies of reducing shading effect are mentioned. The maximum power point tracking cannot be done properly if the panels are shaded. Shading also results the decreased output of the PV modules and the performance of the overall system decreased due to this. To overcome with all the drawbacks of shading, the bypass diode methods and DC-DC converter method are discussed here, which helps to reduce shading, and maintaining the module output to a moderate value. Reduction of shading through the bypass diode is more suitable than converter method as the converter method results in the additional cost of the overall system.

REFERENCES

1. Tarana Afrin Chandel, Md Arifuddin Mallick, Mohd Yusuf Yasin "Performance of Partial Shading on Solar Photovoltaic System", International Journal of Recent Technology and Engineering, March 2019, pp. 1444-1449.
2. Ekpenyong, E.E and Anyasi, F.I, "Effect of Shading on Photovoltaic Cell", IOSR Journal of Electrical and Electronics Engineering (IOSR-JEEE), Nov. - Dec. 2013 pp. 01-06.
3. Amardeep Chaudhary, Shriya Gupta, Dhriti Pande, Fazal Mahfooz, Gunjan Varshney, "Effect of partial shading on characteristics of PV panel using Simscape", Int. Journal of Engineering Research and Applications, October 2015, pp.85-89.
4. Solar Electric Photovoltaic Modules, "http://www.solardirect.com/pv/pvlist/pvlist.htm", accessed on April 16, 2019.
5. Samer Said, Ahmed Massoud, Mohieddine Benammar and Shehab Ahmed, "A Matlab/Simulink-Based Photovoltaic Array Model Employing SimPowerSystems Toolbox", Journal of Energy and Power Engineering 6 (2012) pp. 1965-1975.
6. Solar Cell I-V characteristics, "http://www.alternative-energy-tutorials.com/energy-articles/solar-cell-i-vcharacteristic.html", accessed on April 16, 2019.
7. Mohammad Reza Maghami, HashimHizam, ChandimaGomes, Mohd AmranRadzi, "Power loss due to soiling on solar panel: A review", Article in Renewable and Sustainable Energy Reviews, January 2016.
8. L. Fialho, R Melicio, V.M.F. Mendes, J. Figueiredo, M. Collares-Pereira, "Effect of Shading on Series Solar Modules: Simulation and Experimental Results", Conference on Electronics, Telecommunication and Computers- CETC 2013.
9. Arjyadhara Pradhan, S.M. Ali, Chitralekha Jena, "Analysis of Solar PV Cell Performance with Changing Irradiance and Temperature, "International Journal of Engineering and Computer Science, 1 Jan 2013, pp. 214-220.
10. Tarana Afrin Chandel, M A Mallick, Mohd Yusuf Yasin, "Performance Analysis of Solar Photovoltaic Panel using Nanotechnology: A Review", International conference on Electrical, Electronics, Computers, Communication, Mechanical and computing, 2018, catalog no. CFT18037-PRT: 978-1-5386-4303-7.

11. Davud Mostafa Tobnaghi, Rahim Madatov, Daryush naderi, "The Effect of Temperature on Electrical Parameters of Solar Cells", International Journal of Advanced Research in Electrical, Electronics and Instrumentation Engineering (An ISO 3297: 2007 Certified Organization), December 2013 Copyright to IJAREEIE www.ijareeie.com 6404.
12. Kashif Ishaque and Zainal Salam, "A Deterministic Particle, Swarm Optimization Maximum Power Point Tracker for Photovoltaic System under Partial Shading Condition", Member, IEEE.
13. J. C. Teo, Rodney H. G. Tan, V. H. Mok, Vigna K. Ramachandaramurthy and ChiaKwang Tan, Impact of Partial Shading on the P-V Characteristics and the Maximum Power of a Photovoltaic String, Article at Energies 2018, 11, 1860.
14. Belqasem Aljafari, American Journal of Engineering Research (AJER) 2016 American Journal of Engineering Research (AJER), pp-123-126 www.ajer.org.
15. Nor Hanisah Baharudin, "Topologies of DC-DC Converter in Solar PV Applications", Indonesian Journal of Electrical Engineering and Computer Science, November 2017, pp. 368- 374.

AUTHORS PROFILE

Kavita Singh received her B.tech degree in Electronics and Communication Engineering, from PSIT Kanpur, affiliated to UPTU (Later AKTU) in 2014. She worked as a guest lecturer in Govt. Polytechnic, Mau for two years. She is currently pursuing M.tech in Renewable Energy from Integral University, Lucknow. Her area of interest includes Renewable Energy Technology.

Tarana Afrin Chandel received B.Tech degree from Magadh University in 2002 and M.Tech degree from U.P Technical University in 2009. She is pursuing PhD in Renewable Energy System in the Department of Electronics and Communication Engineering, Integral University, Lucknow. She is working as an Associate Professor in the Department of Electronics and Communication Engineering, Integral University, Lucknow. She is acting as a **Principal Investigator (PI)** in a govt. project (**Performance Analysis of 1MW Grid Connected Solar Photovoltaic System using Image Analysis**) sponsored by IEI, Kolkata, West Bengal. She is honored as **Pride of India** by International Publishing House on 12 September 2018. She is awarded **Excellent Teaching in Higher Education** in International Women Research and Connect Award 2018 on 8 March 2018, **Best Faculty in Rural Institution**, in the National Conference on Exploring Science and Technology for the Future Developments held on 25 November 2017, **Best Paper Award** by in 4 National conference on Challenges & opportunities for Technical Innovation on 19th & 20th February 2016 held at Ambalika Institute of Management and Technology, Lucknow, U.P and **Rashriya Gaurav Award** for her Excellence in Meritorious Services, Outstanding Performance and Remarkable Role by Dr Bhishma Naraian Singh at the Seminar on Global Participation of India's Economic Development at New Delhi on 24 May 2010. She is Life member of various societies like ISTE, IEI and Robotics Society, I.U

Saif Ahmad received his B.tech degree in Electronics and Communication Engineering from Integral University, Lucknow in 2009. He has completed his M.tech from Integral University, Lucknow in 2013. He is currently working as an Assistant professor at ECE Department in Integral University. His area of interest includes Renewable Energy Technology.