International Journal of Recent Technology and Engineering (IJRTE)
ISSN: 2277-3878 (Online), Volume-8, Issue-1, May 2019

An Efficient and Low Cost Real Time Heart Rate Monitoring and Alerting System using Virtual Instrumentation

Shaik Shafi , Sai Harish, Surya Tej, Prudhvi Raj

***Abstract:** In the recent past there has been significant attention of the researchers towards the design of heart rate monitoring systems to indicate the health condition of a patient. Thus, heart rate monitoring became one of the major concern in any medical emergency, where monitoring should be done accurately without any errors. In this paper we propose an efficient low cost heart rate monitoring equipment based on piezoelectric sensors and National Instruments Data Acquisition Card (myDAQ). The proposed system includes series of steps while continuous monitoring of the heart rate. At the initial, the heartbeat is measured by using piezoelectric sensors. Later, acquired signals are processed through NI myDAQ hardware and analyzed using LabVIEW software tool. Further, the proposed system will assist the healthcare professionals by giving a text or e-mail message/alert for necessary medical advice on time.*

***Keywords:** Ballistocardiography (BCG), Electrocardiography (ECG), NI myDAQ and Piezoelectric sensor.*

I. INTRODUCTION

The HRV is a crucial factor in patient health monitoring and is considered to be a vital parameter for heart attack. Here, we deal with monitoring of the heart rate by acquiring a Ballistocardiography (BCG) signal through different means. The BCG reflects the mechanical activity of the heart and is one of the oldest non-invasive methods for cardiac evaluation. Nowadays, so many people are suffering from heart-related diseases such as cardiac arrest and some other problems. The main objective is to design a continuous heart rate monitor using the Lab VIEW tool. This prototype is a better way to monitor patient heart rate and give information regarding the heart condition. People might not be diagnosed with heart disease until they have a heart attack, heart failure or any other problem. It is important to notice heart rate variability and discuss concerns with your doctor. Monitoring can be very helpful if cardiovascular diseases are found at the early stages by having regular evaluations. Heart disease is easier to treat when detected early than at later severe stages. If heart rate is too high or low a light and beep sensor gives the sign of an emergency.

Towards this, in the recent years there has been increasing in the utilization of sensor based real time monitoring patients' health by analyzing heart rate variability. Our major objective is to monitor the patients' health by analyzing heart rate variability. Ballistocardiography, Real-time heartbeat detection is our major concern. Ballistocardiograph (BCG), used for measuring the heartbeat induced mass movements generated by forces associated with it. There are many technologies used to monitor patient's heart condition but our prototype enables accurate and precise monitoring and moreover supports a better living. It would be helpful for both doctors and patients if the heart condition could be monitored regularly at the home before making the decision whether or not it is necessary to visit the hospital. The developed system of this study consists of a National Instruments Data Acquisition Card (myDAQ), LabVIEW Software Tool and a piezoelectric sensor to capture the signal. This method gives data regarding the heart rate and body temperature simultaneously in the real-time and shows it on the User Interface created on the LabVIEW. Today, there are many Heart-related problems all around and are increasing at a rapid pace. Studies mention that there is a relation between cardiovascular rate and chronic sleep problem [9]. Therefore, there is a need for much accurate, precise and compact heart rate calculating method is required for taking action in proper time. Such a device is more essential in a situation where there is no doctor or clinic nearby and patients are unable to not recognize their actual condition. The researchers implemented several methods for heart rate detection based on pre-processing, segmentation, feature extraction, and classification techniques [1-2]. This section presented a brief evaluation of some significant contributions to heart rate monitoring methods. Lee et.al [3] designed a smart shirt to measure electrocardiogram (ECG) and other physiological signals for real time health monitoring of a patient. The shirt majorly includes sensors to get the body signal. The considered body signals are disseminated to a server PC via IEEE 802.15.4 network. In order to minimize the noise associated with the electrocardiogram an adaptive filtering has been used in this workAuthors in [4] [5] proposed a system to measure BCG and ECG in normal chair using EMFi sensors. According to the authors ECG is a general technique to determine the patient's heart rate by the investigation of ECG wavelet. On the other side, BCG, for pulse rate measuring purpose to provide a sensible exactness in assessment.

Revised Manuscript Received on 30 May 2019.
***** Correspondence Author
Shaik Shafi*, ECE, B V Raju Institute of Technology, Narsapur, Medak, Telangana, India.
Sai Harish, ECE, B V Raju Institute of Technology, Narsapur, Medak, Telangana, India
Surya Tej, ECE, B V Raju Institute of Technology, Narsapur, Medak, Telangana, India.
Prudhvi Raj, ECE, B V Raju Institute of Technology, Narsapur, Medak, Telangana, India.

The BCG sensors are placed in the chairs back seat of the patients. These sensors placed to collect the data based on the vibrations and transmit to the main. These sensors can also be used to evaluate the pressure-motion because of heart movement. In BCG, the sensing component can be placed anywhere with little disturbance. Whereas, in the case of ECG the electrodes have to be attached to the patient's body making uncomfortable. This may irritate the patient and make him vexed. By this, we can say that BCG is a legitimate alternative to ECG which would ensure flexibility and comfort [6-8].

Orlando R et.al [9] presented a Mobile based system for real time monitoring body parameters. It includes a body sensor network to receive physiological data from the body and Bluetooth device to propagate collected to a mobile unit. The results show that the proposed Mobile based system is able to record and process the physiological data of patients under different mobility scenario.

Authors in [10] [11] designed to measure pulse rate using the concept of LED and a photo resistor. When photo-resistor absorbs enough light an analog signal is generated. A finger is kept between a red LED and photo-resistor depending on whether there is an increase or decrease of blood in the finger. The change is absorbed by the photo-resistor and pulse is generated. Monitoring the patient continuously is more important. Use of light or LED sources may not be legit and there may much interference too. Patients may be relaxed and comfortable no electrodes are attached to the body for estimation of heart rate. These sensors sense the pressure movement and give the mechanical activity of the heart.

A new set of sensor such as piezoelectric can be used to acquire BCG signal [12] [13]. Signal processing can be used for a better analysis of wavelet and would be much efficient [14]. Nedoma et al [15] proposed a new evaluation and comparison of BCG and PCG signals using Bragg grating and fiber interferometric sensors for detecting the Heart Rate of the human body. The experimental results were carried out by the Bland-Altman method against reference ECG signal. Abdullah et al [16], presented a new Smartphone based health monitoring system to monitor and diagnose patients continuously. In addition the acquired physiological data is stored and published online. Thus, the healthcare professional can remotely monitor their patients at any time. In the similar lines authors in [17] presented tele-monitoring application, allows doctor to view his patient's physiological parameters remotely in a web page in real time using LabVIEW.

From the background of the literature and in line with [12] [13] we propose real time low budget heart rate monitoring system to measure and monitor patients heart rate continuously. The system includes piezoelectric sensors and National Instruments Data Acquisition Card (myDAQ). Initially, the heartbeat is measured by using piezoelectric sensors and signals are processed through NI myDAQ and LabVIEW software tool. This gives accurate and precise measurement and helps in providing a reliable indication of their robustness.

II. PROPOSED WORK

3.1. Heart rate monitoring:

This method consists of both hardware and software parts. The hardware includes a piezoelectric sensor, National Instruments data acquisition card (DAQ) and instrumentation amplifier. Firstly, we use a piezoelectric sensor for sensing pressure movements. The flow of blood through veins is estimated. We use NI myDAQ for collecting the data from the sensor and is passed onto LabVIEW for processing and filtration. NI MAX (Measurement and Automation Explorer) is software used for connecting myDAQ to piezoelectric sensor and configuring inputs and pins. From there the data is transmitted using functions in the LabVIEW are used for BCG acquisition. Here, in LabVIEW, a UI is created for showing the heart rate and graph. For heart rate monitoring we need a collector VI, peak finder VI for the collection of data serially and to find a prefixed point respectively. Then the peaks of the processed signal are detected using peak detector function in LabVIEW. For a accurate measurements, we will have to use two types of filter, high pass and a low pass filter or one pass band filter.

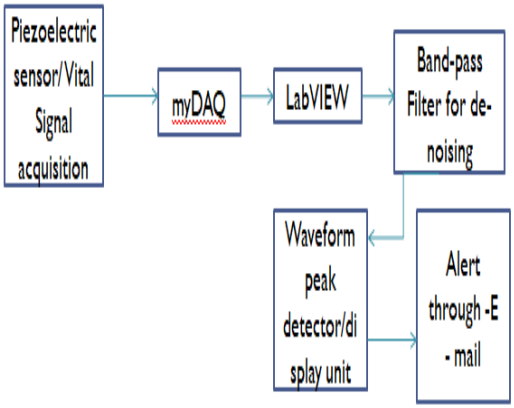

Fig. 1 Block diagram of the proposed work.

3.2. Steps involved in recording and monitoring heart rate:

Step1: Connect the piezoelectric sensor and a couple of resistor in series on the breadboard.

Step2. Connect the two piezoelectric sensors in parallel in order accurate readings.

Step3. Data acquisition:

For the purpose of data acquisition, two piezoelectric sensors are attached in a series for better sensitivity and accurate signal. The BCG signal is acquired using these sensors continuously for a certain time say 10 minutes. The National Instruments Data Acquisition (myDAQ) is configured for collecting the BCG data. This DAQ also supports wireless connectivity which may be further helpful for receiving the data wirelessly. The sensor is connected to DAQ and using the National Instruments Measurement and Automation Explorer (NIMAX) in the laptop the DAQ is configured and output is taken from respective pins. Using NI MAX also a wireless transmission can be established between myDAQ and laptop.

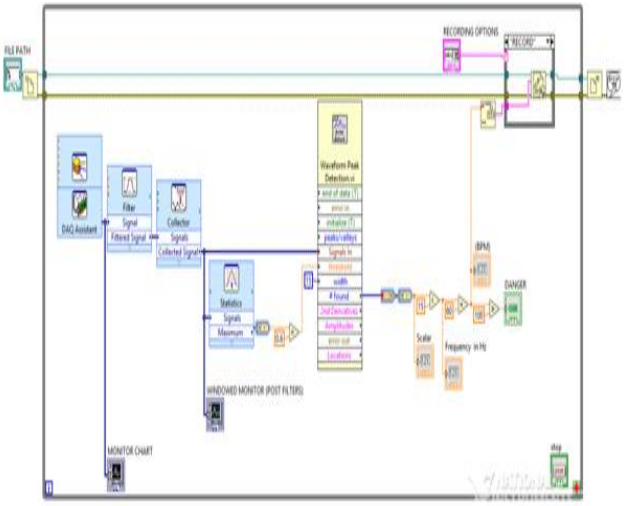

Fig.2. LabVIEW based Schematic for processing data.

Various VI modules used in the process are: DAQ assistant, Band pass filter, Basic multiplication and division module, Peak detect module, Waveform graph for the filtered signal. Drag and drop all the modules needed onto the LabVIEW and connect them as shown in fig.2.

Step5: Preprocessing:

The signal which got from the DAQ through NIMAX is a raw and noise signal. For the purpose of processing the signal, we do de-noising, amplification and filtering baseline. The signal from the sensor is having amplitude of range 35-70 mV. So, there is a need for amplification and making robust. Then this amplified signal is filtered by passing it through a pass band filter for getting an enhanced signal and also removing the baseline wandering.

Step6: Interval calculation:

After preprocessing the signal, the signal is passed through a peak detector with a threshold value. This collects the data of intervals at which the amplitude occurs. Then the heart rate is calculated using a formula heart rate = (1st peak – 2nd peak location)/sampling rate. This gives us the mean value and multiplied by sixty Bpm gives heart rate.

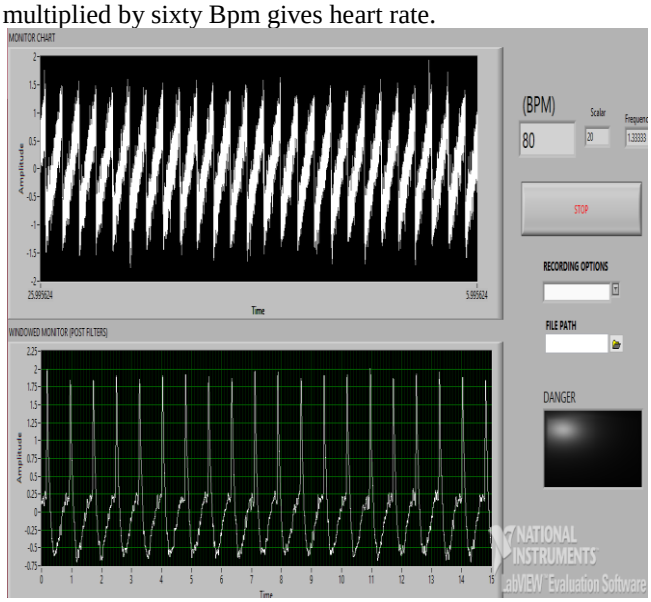

Fig.3. BCG waveform before and after filtering.

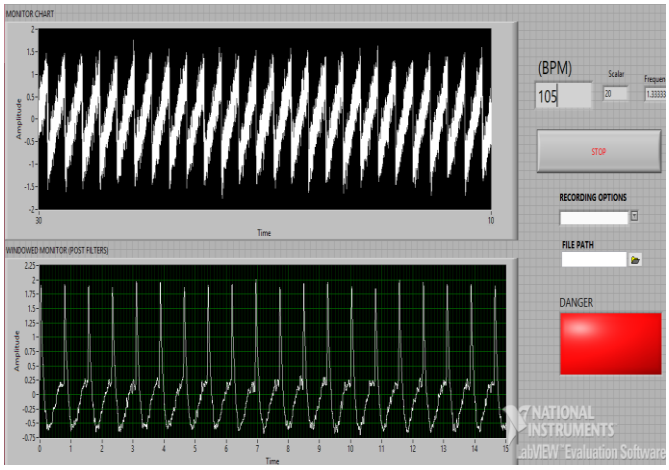

Fig.4. BCG waveform before and after filtering with Red Boolean indication.

The band-pass filter has a pass-band set between 1 Hz and 3 Hz to allow heart beat signal to come through and other environmental frequency (noise) would be rejected. The band pass works by allowing frequency within a certain range pass and attenuates other signal frequencies. Initially we intended on making both a high and low pass filter but instead we used a band-pass. If the heart rate is above the set threshold, a red color indicator on the LabVIEW front panel turns on. This indication gives the alert to the user.

Step7: LabVIEW data collection and mailing.

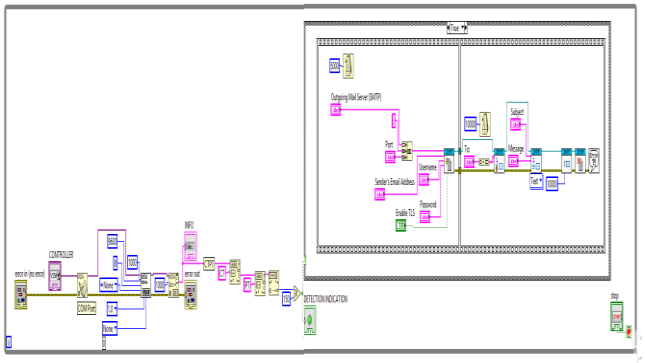

Fig.5. LabVIEW code for data collection and mailing.

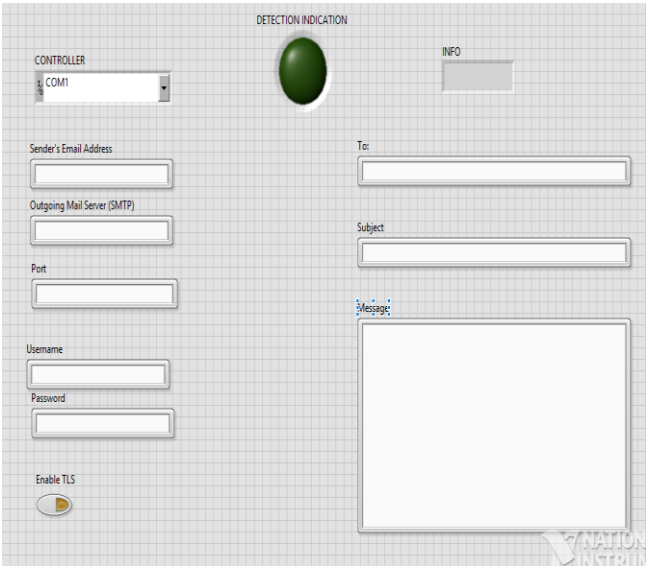

Fig.6. LabVIEW graphical user interface.

The final part is to record the data collected in a file. For this, initially, the file path is created. The collected data from the raspberry pi through a serial data transmitter is converted is number to a decimal string. A file is made to created/open and a loop is created so as to save values upon requirement. Write to text file function on LabVIEW is used and written to the source file. In the end, the file is closed. Later on, whenever the patient blinks a Boolean expression is given to the case structure in the LabVIEW to execute true or false condition depending on the signal from the patient. An SMPT (Simple Mail Transfer Protocol) is created in the LabVIEW using various functions and internet is connected. The mail id, senders mail id, receiver's mail id, text required to be sent and Boolean led blink to indicate patients alert on the monitor. If the Boolean expression is true, pre-written message is sent to the concerned person through a mail using Simple Mail Transfer Protocol. Upon running the program, a WordPad with data is created and an alert is sent to the guardian

Different fields can use the product for various applications. From health monitoring to the fitness tracking this product will have the capability to fulfil the required purpose.

- It can be used in hospitals/dispensaries.
- A better and accurate method of measuring heartbeat.
- Useful at homes for regular monitoring and staying alert.
- A set point can be helpful in determining whether a person is healthy or not.
- Checking his / her heartbeat and comparing with set points.

III. CONCLUSION

The combination of piezoelectric sensors with LabVIEW processing and alerting unit offers accurate portable heart rate monitoring system. The proposed heart rate monitor illustrates how valuable LabVIEW can be on a daily basis of a person's life. Since this method with sensors is more comfortable for the patients. As a part of future work, this heart rate monitor can be used wireless connecting different patients and monitoring their health from single location. Further, the so obtained data can be made available through server using IOT technology. The information can be transferred wireless to remote locations for observation of health condition

REFERENCES

1. Electrophysiology, Task Force of the European Society of Cardiology the North American Society of Pacing. "Heart rate variability: standards of measurement, physiological interpretation, and clinical use." Circulation 93, no. 5 (1996): 1043-1065.
2. Junnila, Sakari, Alireza Akhbardeh, Laurentiu C. Barna, Irek Defee, and Alpo Varri. "A wireless ballistocardiographic chair." In 2006 International Conference of the IEEE Engineering in Medicine and Biology Society, pp. 5932-5935. IEEE, 2006.
3. Lee, Y.D. and Chung, W.Y. (2009) "Wireless Sensor Network Based Wearable Smart Shirt for Ubiquitous Health and Activity Monitoring", Sensors and Actuators B: Chameical, Vol. 140, No. 2, July, pp. 390-395.
4. Koivistoinen, T., S. Junnila, A. Varri, and T. Koobi. " A new method for measuring the ballistocardiogram using EMFi sensors in a normal chair." In The 26th Annual International Conference of the IEEE Engineering in Medicine and Biology Society, vol. 1, pp. 2026-2029. IEEE, 2004.
5. Postolache, Octavian, Gabriela Postolache, and Pedro Silva Girao. "New device for assessment of autonomous nervous system functioning in psychophysiology." In 2007 IEEE International Workshop on Medical Measurement and Applications, pp. 1-5. IEEE, 2007.
6. Postolache, O., P. S. Girão, and G. Postolache. "New approach on cardiac autonomic control estimation based on BCG processing." In 2007 Canadian Conference on Electrical and Computer Engineering, pp. 876-879. IEEE, 2007.
7. Berntson, Gary G., John T. Cacioppo, Karen S. Quigley, and Vincent T. Fabro. "Autonomic space and psychophysiological response." Psychophysiology 31, no. 1 (1994): 44-61.
8. Orlando R. E. P., Caldeira, M. L. P. Lei S., and Rodrigues, J.P.C (2014), "An Efficient and Low Cost Windows Mobile BSN Monitoring SystemBased on TinyOS", Journal of Telecommunication Systems, Vol. 54, No. 1, pp. 1-9.
9. Chen, Zhihao, Ju Teng Teo, Soon Huat Ng, and Xiufeng Yang. "Portable fiber optic ballistocardiogram sensor for home use." In Optical Fibers and Sensors for Medical Diagnostics and Treatment Applications XII, vol. 8218, p. 82180X. International Society for Optics and Photonics, 2012.
10. Ayas, Najib T., David P. White, JoAnn E. Manson, Meir J. Stampfer, Frank E. Speizer, Atul Malhotra, and Frank B. Hu. "A prospective study of sleep duration and coronary heart disease in women." Archives of internal medicine 163, no. 2 (2003): 205-209.
11. Penzel, Thomas, J. McNames, P. De Chazal, B. Raymond, A. Murray, and G. Moody. "Systematic comparison of different algorithms for apnoea detection based on electrocardiogram recordings." *Medical and Biological Engineering and Computing* 40, no. 4 (2002): 402-407.
12. Inan, O. T., M. Etemadi, R. M. Wiard, L. Giovangrandi, and G. T. A. Kovacs. "Robust ballistocardiogram acquisition for home monitoring." *Physiological measurement* 30, no. 2 (2009): 169.
13. Kortelainen, Juha M., Martin O. Mendez, Anna Maria Bianchi, Matteo Matteucci, and Sergio Cerutti. "Sleep staging based on signals acquired through bed sensor." IEEE Transactions on Information Technology in Biomedicine 14, no. 3 (2010): 776-785.
14. Nedoma, Jan, Marcel Fajkus, Radek Martinek, Stanislav Kepak, Jakub Cubik, Stanislav Zabka, and Vladimir Vasinek. "Comparison of BCG, PCG and ECG signals in application of heart rate monitoring of the human body." In 2017 40th International Conference on Telecommunications and Signal Processing (TSP), pp. 420-424. IEEE, 2017.
15. Abdullah, Amna, Asma Ismael, Aisha Rashid, Ali Abou-ElNour, and Mohammed Tarique. "Real time wireless health monitoring application using mobile devices." International Journal of Computer Networks & Communications (IJCNC) 7, no. 3 (2015): 13-30.
16. Mehta, Bhavin, Divya Rengarajan, and Ankit Prasad. "Real time patient tele-monitoring system using LabVIEW." International Journal of Scientific & Engineering Research 3, no. 4 (2012): 1-11.