International Journal of Recent Technology and Engineering (IJRTE)
ISSN: 2277-3878 (Online), Volume-8, Issue-1, May 2019

Seismic Performance of Different Bracing for Steel Frames

Arunroy N S, K Vasugi

Abstract*: *In today's construction field material have very important role. Steel structures are more economical and can be used for long span members. So steel structures are preferred instead of concrete structures. To avoid damages during seismic activity steel structure should need to be more lateral stiffness and ductility. For this steel bracing are provided. Bracing transfer the lateral load due to seismic force and wind. There are different types of bracings are used in steel structures according to their placement and shape. Among the bracings, knee braced frame has excellent ductility and lateral stiffness. So, it has got more seismic performance. In this paper, a study on seismic performance of 4 different knee braced frames is to be performed. A static nonlinear analysis will be done using Ansys software. Results will be compared.

Keyword: Knee bracing, nonlinear static analysis, displacement, stress

I. INTRODUCTION

In civil engineering field so many researches and technologies are coming day by day. Most of the researches are based on the materials used for the construction. So, material have a very good importance in the construction field. Commonly concrete is using, because of the easy availability. When comparing with concrete steel have more advantages. Steel have high strength to weight ratio, excellent ductility, elasticity and it can take more deformation without failure. So steel structures are relatively cheap and durable comparing with other. Seismic force and wind load are commonly occurring lateral load in the high-rise building. During the application of lateral loads structure should be stiff enough to prevent from damages causing by the lateral forces. And the structure should have sufficient ductility to prevent the collapse of the structure. For giving enough strength to lateral loads steel bracing system are used in high-rise buildings. A bracing is a secondary member but important part of the structure. Bracing helps to transfer the laterals loads to support. Bracing provides more stability to the structure. There are different types of bracings are used according to their shape and position. Knee braced frame has got good ductile strength and lateral stiffness. When the connections are properly fused, knee will yield first and the damages on the main members can be prevented. Seismic analysis of this bracing helps to know the behavior of bracing during seismic loads.

Seismic analysis is of two types linear and non-linear. These can be done in static and dynamic also. Static analysis means a constant load is applied during the analysis. While in dynamic analysis there is inertia force which means force changes with respect to time is applied.

II. LITERATURE REVIEW

Junda et al., [1] conducted a study on the cyclic testing and performance evaluation of buckling restrained knee braced frames. The main aim is to find the behavior and efficient design of buckling restrained knee braces. Results showing two key design considerations, that are deformation demand of the brace has to be limited and the design the column and beam to be elastic. By making beam and column elastic, inelastic activities are confined to BRKB. Thus, the ductility and robustness of the structure can be enhanced.

Azam and Hamed., [2] evaluated the seismic capacity of steel frames with knee bracing. Knee braced frames have good ductility and lateral hardness. Lateral hardness is obtained by coaxial bracing. Knee element provides the ductility by the transferring the lateral load. In this study they evaluated the seismic performance of three building of 2 types with nonlinear static analysis. From the analysis the frames with knee bracing showing good ductile property and lateral stiffness.

Hsu and Li, [3] studied the seismic performance of steel frames with knee bracing in controlled buckling mechanism. Seismic performance of knee braced moment resisting frame system were evaluated. Knee braced moment resisting frame and special moment resisting frame are undergone series of cyclic load tests in a controlled buckling mechanism. From the results, in plane buckling brace has higher allowable drift. The study suggesting to use bracing with in-plane buckling mode during the design of knee braced moment resisting frame structure. Farokhi and Mehrdad., [4] investigated the Parameters influencing the behavior of knee braced steel structure. In this investigation an attempt is made to find the influencing factors such as number of stories, length of knee element etc on the seismic behavior of the structure. From the results the knee element will yield before buckling of the bracing and takes the energy and prevent the bracing from buckling. And also knee element with small length and high moment of inertia is leading to the buckling of the bracing. So small knee and high moment of inertia are not recommended. Williams et al., [5] conducted a study on the seismic behavior of knee braced frames.

Revised Manuscript Received on 30 May 2019.
* Correspondence Author
Arunroy.N.S*, Student of final year M.Tech, VIT Chennai, 600124, India.
K Vasugi, Assistant Professor (Sr), School of Mechanical and Buliding Science, VIT ,Chennai, India.

In this study, a short knee element is connected to the diagonal bracing. For finding the optimize design a finite element modelling and experimental investigation also done. From these results standard hot rolled section modified by additional stiffener provides good performance against the seismic loading. And the knee element will yield before the buckling of the bracing.

Leelataviwat et al., [6] studied the seismic design and behavior of ductile knee-braced moment frames. Two KBMF specimens are tested. From the load-deformation characteristics obtained from the results shows that two KBMF specimens can be an alternative for the conventional system. The concept is that frames are designed so that the knee bracing should be yield and buckle under seismic loads.

III. PROBLEM DEFINITION

In this study seismic performance of the knee braced frames is done. In steel framed structure, bracing helps to give lateral strength. In this investigation basically focusing on how the knee braced frames perform against the seismic load. So, different types of knee bracing are analyzed. Four different types of knee braced frames are to be modelled in Ansys software. Nonlinear static analysis is using for the seismic investigation.

IV. PARAMETERS CONSIDERED

1. steel frames with different knee bracing are considered for the analysis.
2. Nonlinear static analysis is conducted.
3. Displacement, stiffness and stress acting on the frames.

V. MODELLING AND ANALYSIS

In this investigation four different steel frames models are made. Following are the specification used during the investigation.

Table 1: Specifications for the modelling

Column height	3m
Length of beam	3m
Column	ISHB200
Beam	ISHB 150
Bracing	ISMB100
Knee	ISLB125
Yield strength	250 MPa
Elastic modulus	250MPa
Poison's ratio	0.3

Four different knee braced steel frames are modelled using Ansys software.

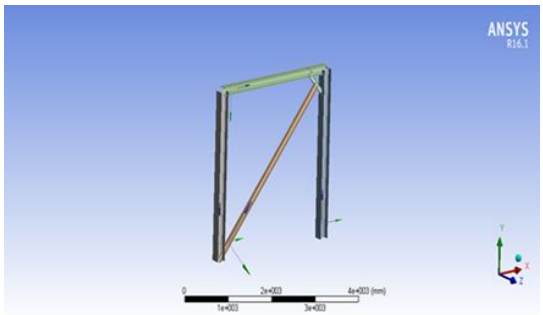

Fig.1: One knee Diagonal bracing

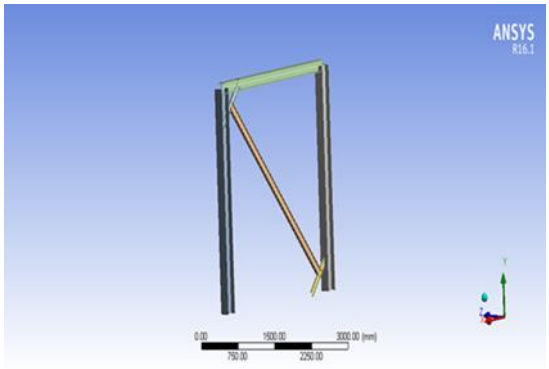

Fig.2: Two knees Diagonal bracing

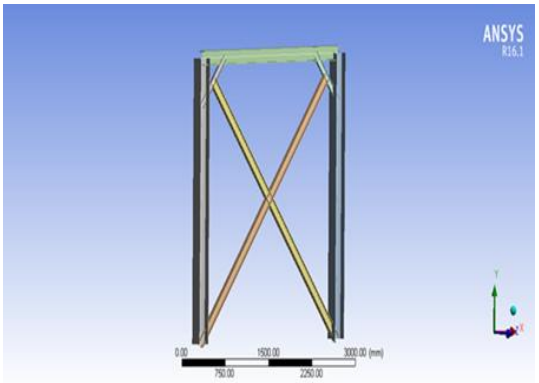

Fig.3: X knee braced frame

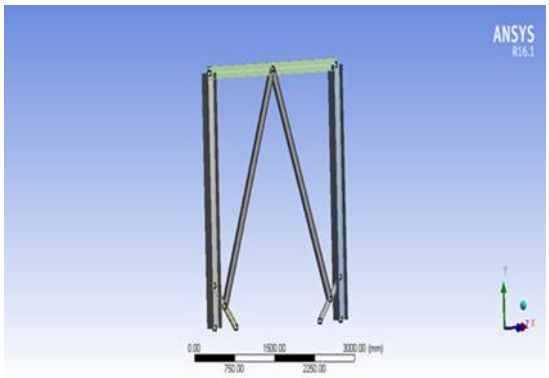

Fig.4: Chevron knee braced frame

Non-linear static analysis is performed for all the 4 steel frames. Nonlinear static analysis can be performed by two methods, one force oriented and other one displacement oriented. Here Frames are subjected to a displacement controlled lateral load pattern. Loading is continued until the ultimate condition reaches.

VI. RESULT AND DISCUSSION

A. LOAD V/S DISPLACEMENT

From the analysis, the load carrying capacity and deflection of the steel frame due seismic is obtained. Fig 5 showing the load v/s displacement of different frame system. From the figure we can understand that the X knee braced frame can take more load compared to other bracing system with less displacement.

Table :Ultimate Load and Maximum displacement

Type	Maximum Displacement (mm)	Ultimate Load (kN)
1 knee KBF	27.582	196.21
2 knee KBF	12.748	153.42
X KBF	7.3836	248.63
Chevron KBF	33.942	113.61

X knee braced frame is taking a maximum displacement for an ultimate load of 248.63kN. Chevron knee braced frame is taking less load of 113.61kN for a displacement of 33.942mm. X knee braced frame has the maximum load carrying for a less displacement. So, the X knee braced frame is stiffer when compared to other bracings.

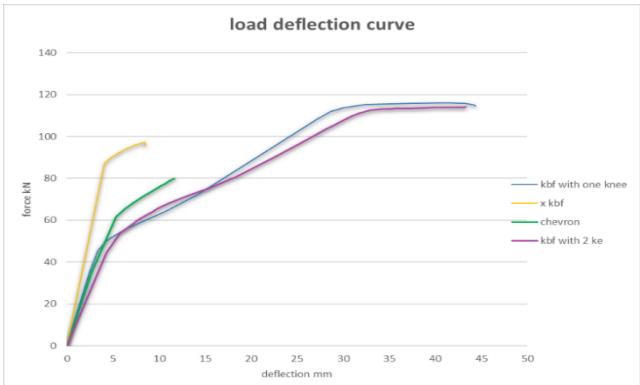

Fig. 5: Load V/s Displacement curve of bracing for steel frames

B. Stress

Stress is the force acting on the unit area of material. By finding out the stress acting on the members, how the seismic force is affecting on each members of frame. Nonlinear static analysis gives the stresses acting on each member and also can find the failure of the structure will occur.

Table 2: Stress acting on members

Type of knee bracing	Stress in column (MPa)	Stress in beam (MPa)	Stress in bracing (MPa)	Stress in knee (MPa)
1 knee KBF	142.36	156.7	132.47	233.95
2 knee KBF	133.31	117.02	123.71	231.5
X KBF	75.226	86.854	102.436	230.17
Chevron KBF	156.99	177.61	120.374	186.04

Stress acting on knee element in each frame are larger than the stress acting in other members. Knee element is taking majority of the stress acting on the frame, so main members are protected by replacing the knee element alone. In X knee braced frame stress acting in each member is less compared to other frame system. So, X bracing showing good performance during the seismic force.

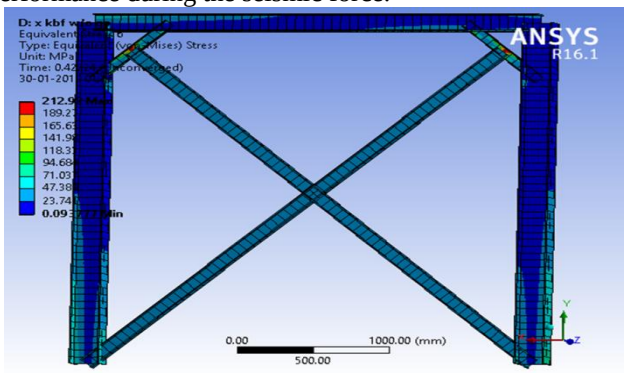

Fig. 6: Stress diagram of X knee steel frame

C. Change in section of knee element

Knee element of the frame plays an important role during the seismic analysis. By changing the section of the knee element helps to find the affect during the seismic analysis. X knee bracing showing good performance during seismic load. So, X knee bracing is used for the study. The knee element section is changed from lighter section of ISLB 75 to heavier section ISLB150

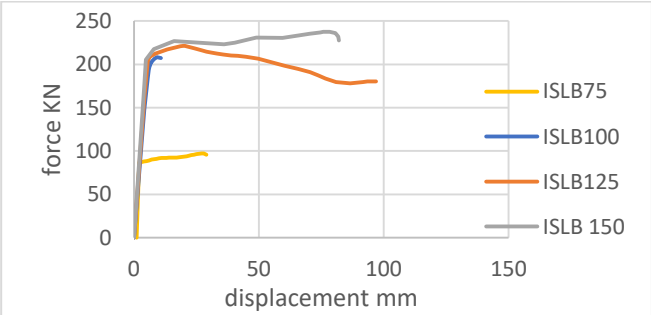

Fig.7: Force v/s Displacement for different sections of knee

From the figure ISLB 150 having the maximum load carrying capacity. When we use a bigger section for the knee element, it's load carrying capacity and stress taking ability also is improved. In a braced frame with knee element, the knee element should have enough strength.

D. Change in length of Kneeknee element in frame

The load carrying capacity of frame may change if we change the length of the knee element to the main members. So, different length of knee which is taken for this investigation. length is changed accordingly by changing the ratio of vertical length from the interception of knee to beam to height of column(h1/H). Or by changing the ratio of horizontal length of knee to beam length (b1/B).

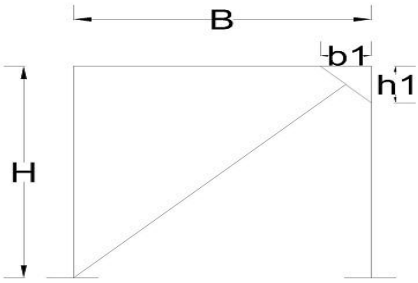

Fig.8: Typical figure of frame

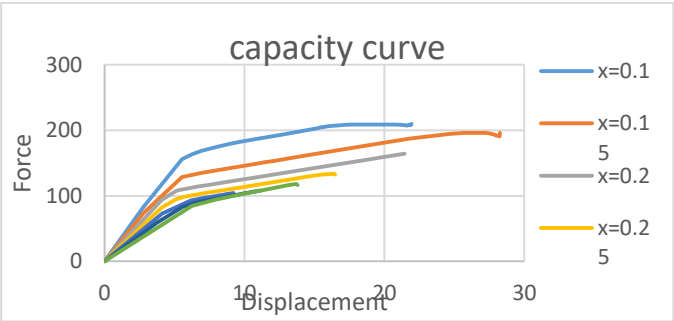

Fig.9: Capacity curve for different length of knee

Fromthe capacity curve, if the ratio increases the capacity of the frame decreasing. So, using smaller length having ratio 0.1 to 0.2 is giving good strength to the steel frame. If we increase the length of the knee element the load which it can is decreasing.

E. With different storey levels

The seismic performance will may change with increase in the storey height in the frame. There fore steel frame with singlestorey, two storey and three storey aretaken for the analysis.

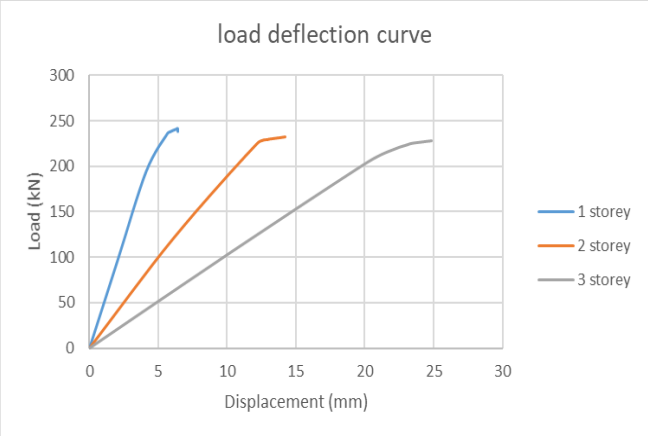

Fig.10: Capacity curve for different storey levels.

From the graph it is clear that capacity is decreasing when there is an increase in the levels. When the storey height increases the seismic load acting on the storey will be increase. So, it is better to build lesser storey building.

VII. CONCLUSION

Based on the results obtained from the analysis the conclusion can be delivered regarding the performance of knee braced frame.

1. Steel frame with X knee bracing having less displacement and having high load carrying capacity compared to other bracing system.
2. From the stress data obtained during analysis, stress in the knee element is more compared to other elements. So, knee element will yield first.
3. As the knee element is yielding first, it can be used as sacrificing element. After the seismic action by changing the knee element we can protect the main structural from failure.
4. If we use a larger section for knee element which gives good results under seismic loads. Use a section for the knee element which should be economical and also strong enough to take the loads.
5. The load carrying capacity of the frame can improved by using shorter length knee element.
6. As the storey height increases the load carrying capacity of frame decreases. So, in a high seismic zone area construction of high storey buildings should be avoided.

REFERENCES

1. Junda E, Leelataviwat S and DoungP.l., "Cyclic testing and performance evaluation of buckling-restrained knee-braced frames", Journal of Constructional Steel Research 148 (2018) 154–164.
2. Azam Raeisi, Hamed Jalavand., "Evaluating Seismic Capacity of Steel Frames with Knee Bracing", (2017) Helix V ol. 7(5): 1862-1872.
3. H.-L. Hsu and Z.-C. Li, "Experimental evaluation on the seismic performance of steel knee braced frame structures with energy dissipation mechanism", Steel Compos Struct 2011; 11(1):77–91.
4. Edris Farokhi and Mehrdad Gordini, "Investigating the Parameters Influencing the Behavior of Knee Braced Steel Structures", American Journal of Engineering and Applied Sciences 2015, 8 (4): 567.574.
5. M. S. Williams, A. Blakeborough, D. Cle´ment and N. Bourahla., "Seismic behaviour of knee braced frames", Structures & Buildings 152, May 2002 Issue 2, Pages 147–155.
6. SutatLeelataviwat, BunyaritSuksan, JarunSrechai and PennungWarnitchai, "Seismic design and behaviour of ductile knee-braced moment frames", J. Struct. Eng. ASCE 137 (5) (2011) 579–588.
7. Balendra, Lim, Liaw., "Large-scale seismic testing of knee-brace frame", Journal of Structural Engineering, ASCE, 1997, 123, No. 1, 11–19.
8. Ming-Tuck Sam, ThambirajahBalendra and Chih-Young Liaw., "Earthquake-resistant steel frames with energy dissipating knee elements" Engineering Structures, 1995, Vol. 17, No. 5, pp. 334-343.
9. PisethDoung, SutatLeelataviwat., "seismic design and evaluation of buckling-restrained knee-braced frame with single plate shear connections",International Journal of Advances in Mechanical and Civil Engineering, ISSN: 2394-2827, Volume-3, Issue-2, Apr.-2016.
10. Leelataviwat, Doung ,Junda, Chan-anan ., "Ductile Knee-Braced Frames for Seismic Applications", ICES 12-14 (2017).
11. Mohammad Reza, Mehrzad and Mehrdad ., "Investigation of the nonlinear seismic behavior of knee braced frames using the incremental dynamic analysis method", Int J Adv Struct Eng (2016) 8:151–159.
12. H.-L. Hsu. Et al., "Seismic performance of steel frames with controlled buckling mechanisms in knee braces", Journal of Constructional Steel Research 107 (2015) 50–60.

AUTHORS PROFILE

Arunroy.N.S, [1]***Student of final year M.Tech, VIT Chennai, 600124, India.***
B.Tech from Toc H Iinstitute of Science and Technology,Arakkunnam
nsarunroy@gmail.com

K Vasugi,[2]Assistant Professor (Sr), School of Mechanical and Buliding Science, VIT , Chennai, India.