International Journal of Recent Technology and Engineering (IJRTE)
ISSN: 2277-3878 (Online), Volume-8, Issue-1, May 2019

Detection of DC Ground Faults of Ungrounded DC System in Sub-Stations/Power Plants

Anantha Krishna M S, A.D Srinivasan

Abstract: ***DC supply is used as source for control and protection of equipments in substations. Ground fault in the DC system can hamper the designed protection and control scheme of AC power system. This paper discusses existing methodologies and proposed technique for ground fault detection in a DC system. In the proposed technique hall effect current sensors are used for sensing the current in each branch of the DC network. This paper demonstrates the online remote monitoring of the DC framework using concept of Internet of Things (IoT), isolation of faults and restoring the DC supply to the equipments in the substation using changeover scheme. Test results show that DC framework of the substation/power plants is remotely monitored and faulty section is efficiently located restoration of DC supply is initiated through other source.***

Index Terms**:** ***DC ground fault, Hall Effect, Internet of Things (IoT), Power plants, Sub station***

I. INTRODUCTION

The DC framework plays a critical role in substation power plant acting as auxiliary supply for control and protection of equipments in substations and transmission lines. Maintaining healthy DC power supply is the primary requirement for smooth and accurate functioning of the relays and circuit breakers for which they are intended for. DC framework is used for switchgear and control applications for detection and isolations of faults on operating respective protective relays and circuit breakers. DC frame work also used as power supply for SCADA and PLCC cabins. DC framework in a substation mainly consists of battery banks –Number of cells connected in series with Battery chargers and DC distribution circuits through control cables. The battery chargers are fed with single Phase or three phase AC power supply. Fig.1 shows the typical DC framework in a substation. Dual DC power supply is used to enhance reliability of the control and protection scheme of the substation. The DC operating voltage is 110V or 220V in 66/11kV Substation and 220kV receiving Station respectively. The battery bank in case of 66kV substation consists of 55 cells each of 2V, 100Ah rating while in case of 220kV substations battery bank consists of 110 cells each of 2V, 300Ah rating. [1], [2]. The Voltage and Ampere Hour rating is selected as per the DC load requirement of the Substation or power plant [2]. Under normal operation, the battery charger supplies dc power to recover the battery voltage after a discharge and to maintain the float voltage while supporting any self-discharge losses in the battery system.

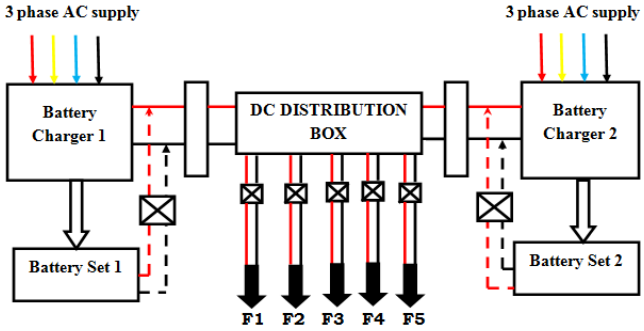

Fig.1 Typical DC Supply System with Dual Source

The charger also supplies the continuous loads on the auxiliary dc system, while the battery supports intermittent medium-rate and momentary high-rate loads, such as trip coils, relays coils, many DC contactors and NO-NC switches used in protection and control. Upon failure of the battery charger or loss of its ac supply, the battery banks has to support the continuous loads along with the intermittent and momentary loads that may occur before the battery charger is repaired or the ac supply is restored. The battery design is more important with reference to the outage time of the battery charger [2].

Typically DC system in substation is ungrounded, positive and negative terminals run throughout the substation and not grounded at any point in other words can be termed as floating ground. The purpose of adapting this type of DC framework is to ensure high resistance with reference to the ground. The unintentional grounding of the DC system can result in unbalance system voltage & after further degradation that might become a permanent fault / short circuit leading to failure of the system. However, single terminal grounding will not cause any disturbance in the system. But, if the other terminal is grounded, it creates a virtual short circuit between the two terminals to the earth. The second terminal fault can disturb the complete protection scheme feeding the substation equipments which may even result permanent failure of the DC systems [3].

Revised Manuscript Received on 30 May 2019.
* Correspondence Author
Anantha Krishna M S*, Department of Electrical and Electronics Engineering, JSS Science and Technology University, Mysuru, India.
Dr A.D Srinivasan, Professor, Department of Electrical and Electronics Engineering, JSS Science and Technology University, Mysuru, India.

DC supply is typically used feeding continuous load such as trip coils, relay coils, DC contactors and NO-NC switches in a substation. Several factors such as climatic changes, air contamination, aging of cables, aging of equipments and insulation failure can contribute to ground fault of a DC supply system. Identification of ground fault in such a DC supply system is changeling particularly when the DC supply system is connected to a huge network. The ground fault detection scheme in an ungrounded DC system can be designed as per the requirement and the application as implemented by the authors [4], [5]. In practice the following strategies are employed to identify DC ground fault in a substation.

[A] Balanced resistance method

In this method, a suitable resistance is connected between positive bus to ground and negative bus to ground. The ratio of voltage from positive bus to ground and negative bus to ground is taken for finding whether the DC system is grounded or not. This method gives only the information on the occurrence of DC ground fault but not about the faulted section in the network [6].

[B] AC signal injection

A low frequency AC signal with two different frequencies is injected in to the DC framework, fault current is calculated and hence the fault resistance is determined [7]. Due to the presence of large distributed capacitance in the DC network, the capacitance current will be greater than the leakage current which may lead to false detection [8]. Another way is to inject the AC signal and measure the signal with current sensors at different branches for grounding current. This method also suffers due to the presence of large distributed capacitance. Injection of AC in to DC frame may lead to increase in ripple voltage of the DC, which may lead to damage or failure of sensitive devices or circuits [8].

[C] DC signal injection

In this method is similar to DC is injected to ungrounded DC system for detection of ground fault. Due to presence of stray and external capacitance in the DC system a small amount of injected DC current will flow to ground thereby increasing the leakage current. The insulation resistance is calculated from the leakage current. The DC is injected when the ratio of voltage of positive bus to ground and negative bus to ground is less than the threshold value [9].

The above discussed techniques suffer with the following limitations for detection of DC ground fault.

a) Injection of AC voltage in to DC system can increase the ripple voltage in the DC supply system which may damage sensitive loads in the DC network.
b) Distributed capacitance has an impact on the fault detection scheme.
c) In case multiple ground scenarios, the amplitude of the injected DC signal is to be carefully monitored because, injected DC signal should not actuate the faulty device.

The method of direct current measurement is employed to overcome the above limitations. These faults occur without any indication, monitoring and analysis of the ungrounded DC system are very vital. Hence, it is very important to monitor the DC system in a substation to prevent sudden tripping in the system on occurrence of DC ground fault. This technique envisages hall effect current sensors [10] and Human Machine Interface for continuous monitoring of DC supply. Selection of sensors for measuring the current is very crucial in this method for ensuring accurate detection of the fault. The values of DC Bus voltage, load current and status of DC network is continuously stored with the timestamp. The stored data can be used for future analysis for improvement of DC network in substation.

II. PROPOSED METHOD

Fig.2 shows the proposed method for the detection of ground faults in ungrounded DC system. This method uses principle of direct current measurement using hall effect sensors and with balanced resistances. A HMI is remotely interfaced for giving information regarding DC network working and also the indication on occurrence of ground fault. A change over scheme is proposed considering dual DC source on occurrence of ground fault.

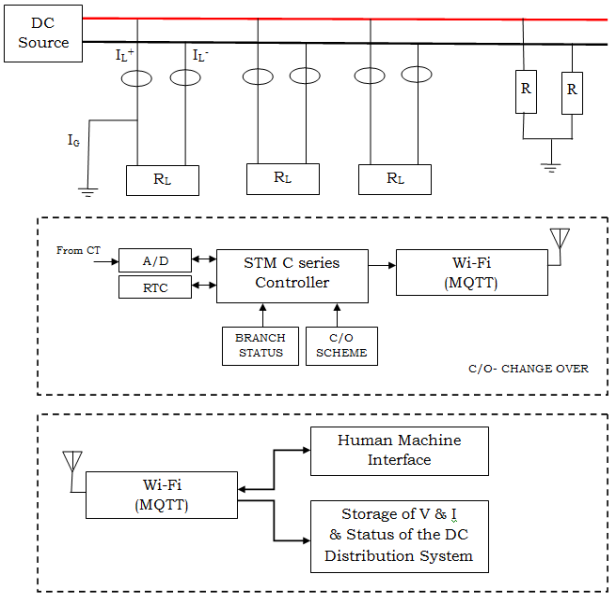

Fig.2 Proposed method for Detection of DC ground fault

Hall effect sensors are connected at each branch for sensing the current. The analog values are converted in to digital values by using A/D converter and then given to the controller for decision making. The Wi-Fi module is interfaced with the controller for the transmission of data. The data is transmitted using Message Queuing Telemetry Transport (MQTT) protocol. A Wi-Fi module at the receiver end receives the data which is interfaced with a HMI and the received data are stored in an SD card for further retrieval.

III. WORKING PRINCIPLE

Under normal condition, the current in the positive terminal (I_L^+) will be equal to current in the negative terminal (I_L^-).

On occurrence of ground fault, ground path current (I_G) will be added to the current in the branch.

Applying Kirchhoff's Current Law to a branch

Under normal condition $I_L^+ = I_L^-$ (a)

Under ground fault condition $I_L^+ - I_L^- = I_G$ (b)

The above two equations are used to detect the ground fault in the ungrounded DC system in the substation.

IV. FLOW CHART

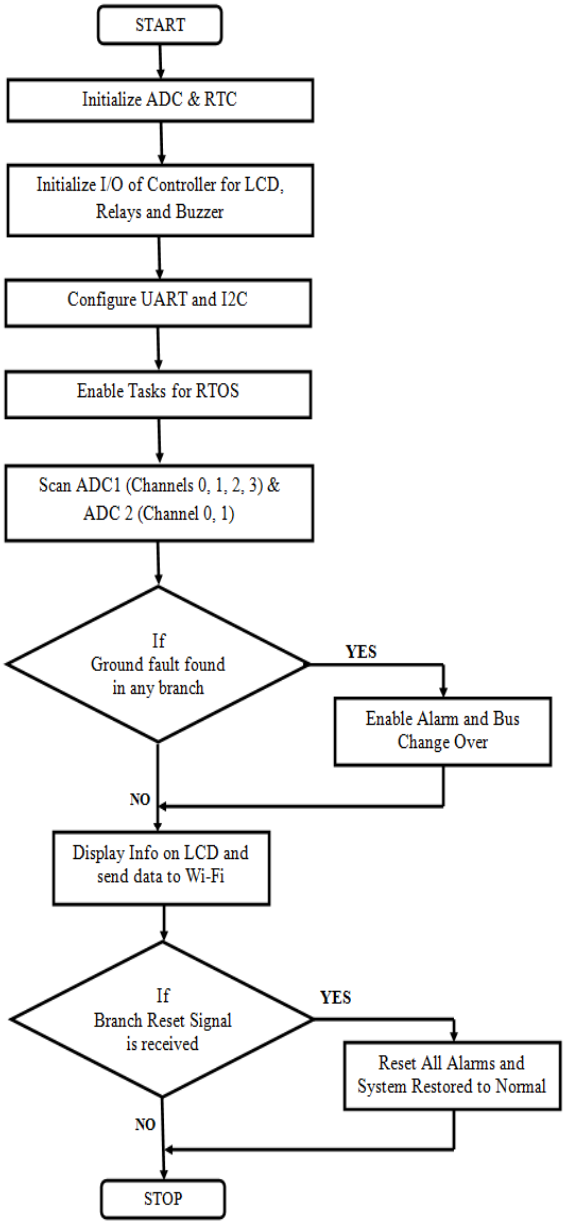

Fig.3 Flow Chart at sending end

Fig.3 shows the flow chart at sending end for detection of DC ground fault and Fig.4 shows the flow chart at receiving end for reception of data and integration of HMI for monitoring the DC system in a substation.

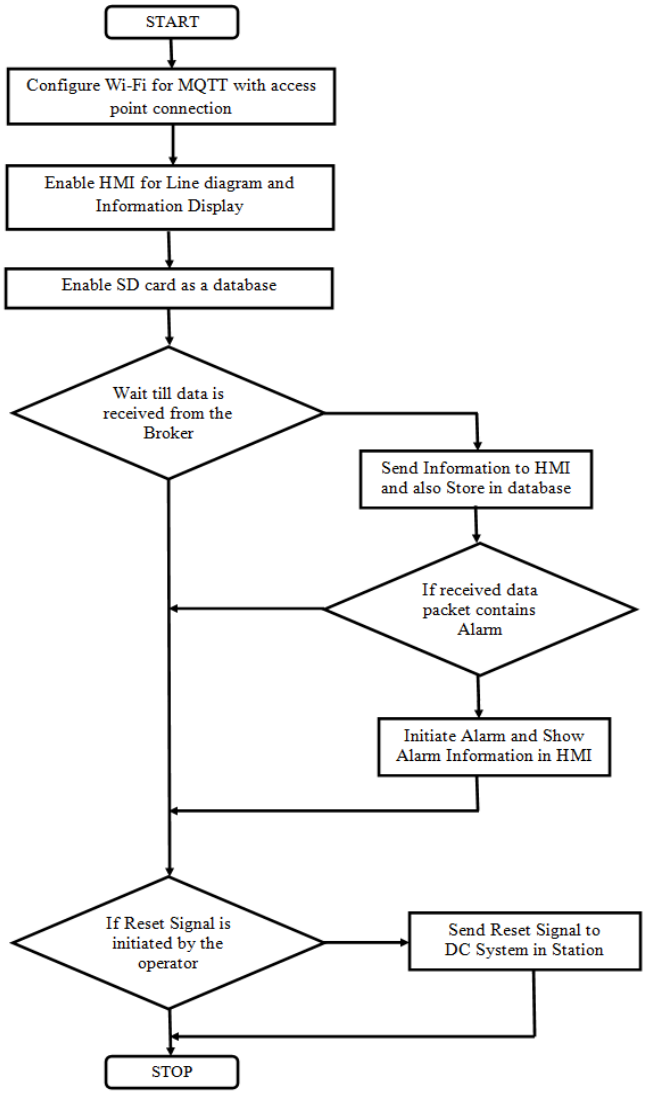

Fig.4 Flow Chart at receiving end

V. HARDWARE DESCRIPTION

Description	Specification
Voltage Source	48V DC, 5A
Hall Effect Current Sensors	WCS2702, 2Amps
Controller	STM32F103C series
Wi-Fi module	ESP 8266
A/D Converter	ADS1015
RTC	DS2321
HMI	Nextion 3.2
LCD	16 x 2

Table. I

The hardware description is given in Table I. The technique for DC ground fault detection is realized with the voltage source of 48V.Hall effect current sensors WCS2702 are used for sensing the current in each of the branches.STM32F103C series – ARM controller is used for decision making for ground fault detection. ESP 8266 is used for transmission and reception of data. Analog to digital converter is used to convert the analog values of current to digital values.RTC is used for keeping continuous track of condition of DC network. A LCD is interfaced to the controller for display of messages in the sending end. A HMI-Nextion-3.2 with touch screen capability is interfaced remotely for monitoring of the DC system.

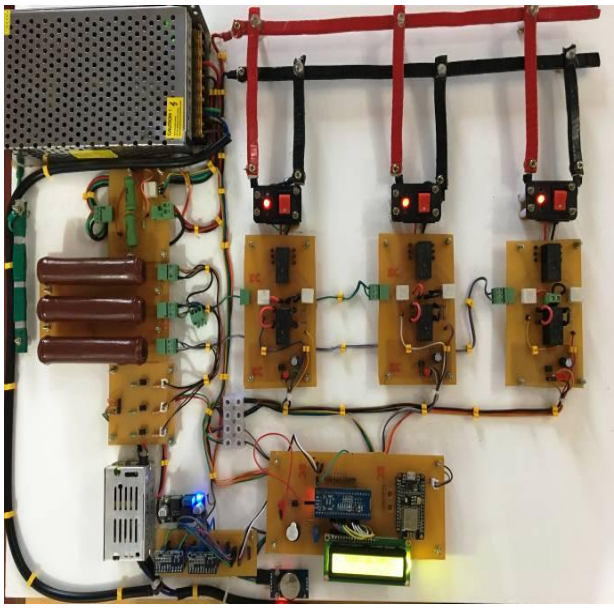

Fig.5 Hardware Prototype of proposed method

Fig.6 HMI of the DC system

Fig.5 shows the hardware setup of the developed unit. The concept of measuring the direct current and hence finding the residual current flowing to the earth on occurrence of earth fault is simulated for three branches with same resistance load. STM-C series controller is used to initiate the alarm on leakage current exceeding a preset threshold value. ESP 8266 Wi-Fi module is interfaced with the controller for publishing the data through MQTT protocol.

Fig.6 shows the HMI used for mimicking the DC system in normal condition at the receiving end. R-1, R-2 and R-3 represent relays for change over and L-1, L-2 and L-3 represent the resistance load connected in the DC system. Under normal condition R-1, R-2 and R-3 are shown in green color. Data are received from a Wi-Fi module and displayed on HMI connected to ESP 8266 at the receiving end. The network status is continuously updated in HMI and hence monitoring of the DC system. On occurrence of fault, a change over scheme is proposed by operating suitable relay thus closing the switch of the fault branch to the other DC bus.

VI. TEST RESULTS

Ground fault is simulated by bringing direct contact of positive or negative terminal to the ground. Ground current of 10mA is calculated by taking difference of positive and negative terminal of each branch. Once grounding takes place the controller is programmed to check for the ground fault based on the difference of current in positive and negative terminal. Alarm is initiated in the network. The information regarding the fault due to grounding of the positive terminal or negative terminal of particular branch is displayed on a LCD. The same information is sent to HMI through a Wi-Fi module and displayed in HMI with the blinking of the grounded terminal. A red alert symbol is shown in faulted section indicating the faulty branch and alarm can be reset from the HMI by pressing the red alert symbol.

Fig.7 shows the LCD displaying message on grounding of positive terminal of branch-1.

Fig.7 LCD message on fault condition of branch-1

Fig.8 shows the ground fault in positive terminal of branch 1.The grounded terminal is shown by changing the color to blue and the relay operation for change over by changing the color from green to red. The source change over is shown by closing the switch of the other DC source. Reset signal is sent by pressing the red alert symbol in HMI. On reception of reset signal at the station end where the DC fault has occurred, the DC system is restored to normal condition.

Fig.8 Branch-1 positive terminal ground fault-HMI representation

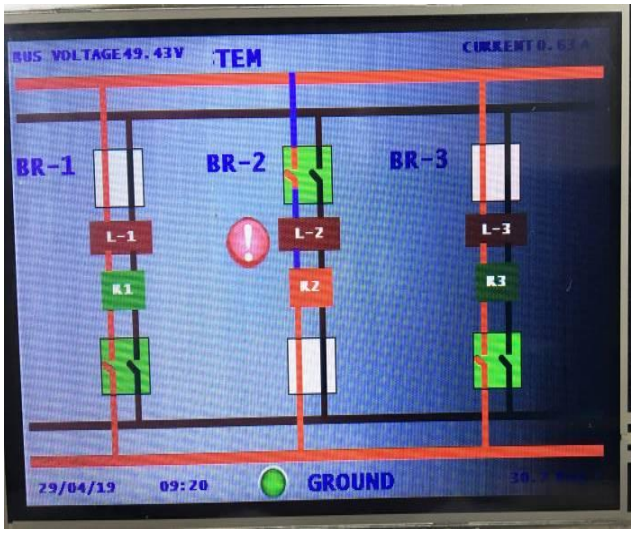

Fig.9 Branch-2 negative terminal ground fault-HMI representation

Fig. 9 shows the HMI representation on occurrence of DC ground fault in negative terminal of branch -2.

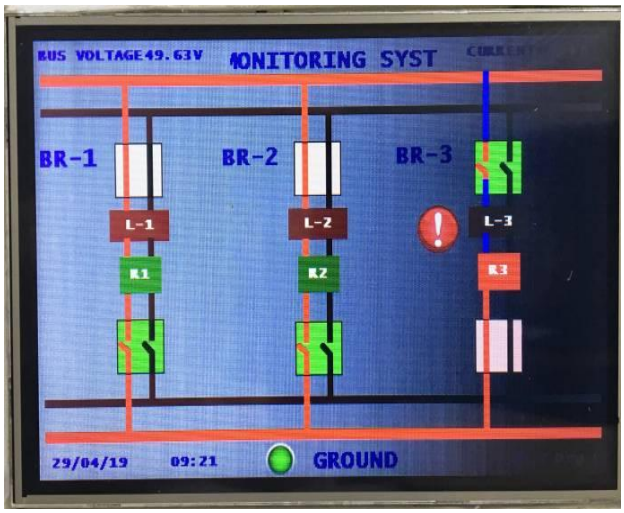

Fig.10 Branch-3 positive terminal ground fault-HMI representation

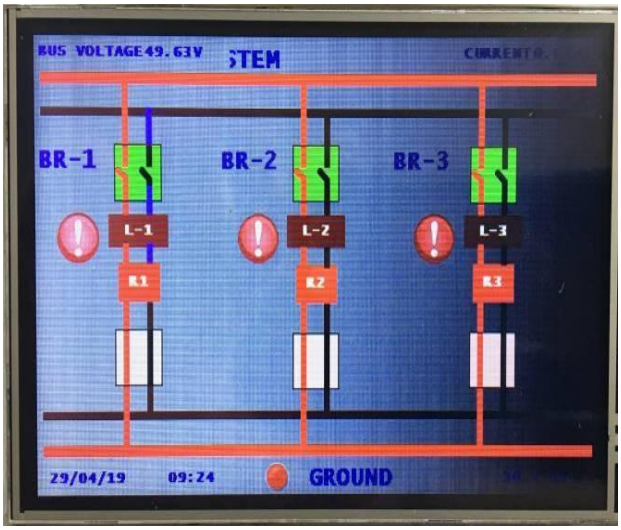

Fig.11 All Branches with ground fault- HMI representation

Fig.10 shows the HMI representation on occurrence of ground fault in the positive terminal of branch 3. Fig.11 shows the ground fault in all the branches and source changeover of the all three branches on the other DC Bus.

VII. CONCLUSION

The proposed method (Direct current measurement) has been successfully developed to detect DC ground fault in substations/ power plants. The important conclusions drawn from the work are

- The developed fault detection scheme can detect single or multiple DC ground faults in the DC network.
- The developed unit can continuously monitor the condition of the DC network in substation.
- This technique is not influenced by the distributed capacitance in the network.
- This technique does not influence the ripple voltage in the DC system as there is no injection of AC signal.
- Data Analytics of the frequent section with faults, brand of wires used, atmospheric conditions can be analyzed and preventive measures can be taken to ensure higher reliable DC supply for those sections in the framework.
- This method gives a complete solution for monitoring, detection, monitoring, isolation and restoration of supply in case of the DC ground fault in Ungrounded DC framework in a Substation/Power plants.
- This scheme can be integrated while designing the DC system in a power plant / substation hence complete protection for DC supply which is used for sourcing control and protection of equipments can be achieved.

REFERENCES

1. IEEE Std. 485-1997, IEEE Recommended Practice for Sizing Lead -Acid Batteries for Stationary Applications.
2. Michael J. Thompson Schweitzer Engineering Laboratories, Inc and David Wilson McLaren, Inc." Auxiliary DC Control Power System Design for Substations" 61st Annual Georgia Tech Protective Relaying Conference Atlanta, Georgia, May 2–4, 2007.

3. Kurt Uhlir, Standby Power System Consultants, Inc. "DC System Grounds: Can You Afford to Live with them?" www.netaworld.org-summer 2008 NETA WORLD.
4. Jae-Do Park, Senior Member, IEEE" Ground Fault Detection and Location for Ungrounded DC Traction Power Systems" IEEE transactions on vehicular technology, vol. 64, no. 12, December 2015.
5. Y. Pan, Member, IEEE, M. Steurer, Senior Member, IEEE, T. L. Baldwin, Fellow, IEEE "Ground Fault Location Testing of a Noise Pattern based Approach on an Ungrounded DC System" IEEE 2010.
6. J.A. Marrero, "Understand ground fault detection and isolation in DC Systems," IEEE Power Engineering Society Summer Meeting, Vol. 3, Jul. 2000, pp.1707–1711.
7. Liwei Li, Ping Ma and Yushun Wang College of Automation Engineering, China "A Novel Method for DC System Grounding Fault Monitoring On- line and It Realization" Proceedings of the IEEE International Conference on Automation and Logistics Qingdao, China September 2008.
8. Xiufang Jia, Chengyong Zhao, Baoshu Li Department of Electrical Power Engineering P.R. China" Affection of Distributed Capacitance on and a New Method of Detecting on Detecting DC System Earth Fault". IEEE, 1998.
9. Yow-Chyi Liua, En-Chih Chang, Yong-Lin Leea, Yu-Zhong Lina, "Detection of Ground Insulation Faults in Ungrounded DC Power Supply Systems by Using a DC Current Injection Method" 2018 5th International Conference on Power and Energy Systems Engineering, CPESE 2018, 19–21 September 2018, Nagoya, Japan.
10. Yow-Chyi Liu, En-Chih Chang, Yu-Liang Lin, Chen-You Lin, "A Novel Online Insulation Fault Detection Circuit for DC Power Supply Systems", International Journal of Smart Grid and Clean Energy vol.7, no. 1, January 2018.

AUTHORS PROFILE

Anantha Krishna M S, M.Tech 2nd Year in Energy Systems Management, Department of Electrical and Electronics Engineering, JSS Science and Technology University, Mysuru, INDIA. Working as Assistant Engineer (Electrical) from 9 years in Karnataka Power Transmission Corporation Limited, Transmission Utility governed by the Government of Karnataka. Deputed for pursuing M.Tech in Energy Systems Management.

Dr A.D Srinivasan, Professor, Department of Electrical and Electronics Engineering, JSS Science and Technology University, Mysuru, INDIA. Working in area of High Voltage Engineering and its applications for the past two decades. Post Graduation and Doctoral degree obtained from IISC, Bangalore. Successfully completed three research projects sponsored by AICTE, VTU and DST also guided many P.G and PhD scholars.