International Journal of Recent Technology and Engineering (IJRTE)
ISSN: 2277-3878 (Online), Volume-8, Issue-1, May 2019

# A Modified Bat Optimization Algorithm Based Parameter Extraction of Solar Cell Models

**Chellaswamy C, Muthammal R, Geetha T S**

***Abstract*: This article presents a new parameter extraction of solar photovoltaic (PV) cell models using a modified bat algorithm (MBA) to increase the speed and accuracy. The two diode models such as one diode and two diode models are used to verify the performance of the proposed MBA in parameter extraction problem. The proposed MBA algorithm overcomes the shortcomings of the bat algorithm. The novelty includes local and global searching ability of bat algorithm is improved by adapting the weight parameter, effectively increase the search region, and uniformity and ergodicity of population are improved by the chaos search strategy. The measured and estimated data sets are used to analyze the performance. Comparison is performed between other optimization algorithms such as simplified bird mating optimizer (SBMO), bat algorithm (BA), and artificial bee colony (ABC) and the results indicate that the proposed MBA outperforms among other methodology in terms of root mean squared error and robustness. The outcome of the proposed MBA shows that it is an efficient alternative method suit for extracting different parameters of solar PV models.***

***Index Terms*: photovoltaic cell, parameter extraction, solar cell model, modified bat algorithm.**

## I. INTRODUCTION

In recent years, increasing energy storage and environmental protection is concerned worldwide. A number of hard works have been proposed to invent new renewable energy technologies [1]. The green energy sources such as wind and solar energy have considerable development for the past few decades. In particular, solar energy has different advantages such as ease of installation, non-polluting, and very low maintenance [2]. Before the installation of the PV panel, the maximum ability and capacity should be evaluated by an efficient and reliable PV simulator [3]. The accuracy and reliability of the simulator depending on the quality of the solar PV models. Moreover, all the parameters of solar PV cells are monitor and diagnose under working condition [4]. Various circuit models are developed to estimate the parameters of solar PV models. Two diode models such as the one diode (OD) model and two diode (TD) model are popular among them [5,6]. Various techniques have been developed for determining the parameters of one and two diode models. The numerical method, analytical solution method, and soft computing algorithms are familiarly used to extract the parameters of solar PV models. Numerical methods consider all the measured data for extracting all the parameters of the solar cells. Usually, the numerical methods utilize non-linear optimization techniques such as conductivity method [7], Newton Rapson method [8] for parameter extraction. These techniques have different disadvantages such as the local minima locking problem and sensitive to the parameter values assigned initially. On the contrary, analytical methods require appropriate assumptions and heavily depend on other parameters, for instance, short circuit current, open circuit voltage, and maximum power point. Analytical methods formulated using simple mathematical functions, it requires less time cost than other methods, the accuracy of this method will reduce due to approximations [9]. These problems create soft computing methods are an efficient method due to its global searching ability. The performance of soft computing algorithms is better than numerical and analytical methods [10,11]. Soft computing methods such as optimization algorithms, heuristic, and metaheuristics algorithms are extensively utilized in solar PV parameter extraction problems. Particle swarm optimization (PSO) algorithm [12], artificial bee colony (ABC) [13], simulated annealing (SA) [14], genetic algorithm (GA) [15], and differential evolution (DE) algorithm [16] are widely utilized for solar PV parameter extraction problem. The computational cost of the few aforementioned algorithms may increase due to its complexity. For example, PSO requires position and velocity equations for computing each solution; GA has different disadvantages such as degradation and low convergence speed [17]; the inconsistencies and trade-off between cooling schedule and temperature are the major issues of SA [18]. The ABC optimization required to estimate more than one fitness function at the watching state. The solar parameter extraction process has different boundary conditions, the search space should be broadened to satisfy them and avoid convergence problems. DE algorithm meets convergence problem and it is managed by adaptively adjusting the control parameters, an adaptive control method is introduced by Tvrdik [19] increases the efficiency of the DE algorithm.

The major contribution of this paper is to propose a modified bat algorithm for OD and TD models. The main idea of the proposed MBA is to reduce the randomness and increase the diversity of the solution. The echolocation behavior of microbats of MBA provides automatic switching between explorative moves and exploitation in solar PV parameter extraction problems.

**Revised Manuscript Received on 22 May 2019.**
***** Correspondence Author
**Chellaswamy C***, Department of Electronics and Communication Engineering, Lords Institute of Engineering and Technology, Hyderabad, India.
**Muthammal R,** Department of Electronics and Communication Engineering, Saveetha Engineering College, Chennai. India.
**Geetha T S,** Department of Electronics and Communication Engineering, Sriram Engineering College, Chennai. India.

This feature of MBA avoids the trapping of the local minima problem and increases the rate of convergence. In addition, to improve the ergodicity and uniformity of population, the MBA introduces chaos search strategy and to balance the local and global search ability an adaptive weight mechanism is introduced. The remaining part of this paper is arranged as follows. Section 2 describes the PV models using a one and two diodes and defines an objective function for the parameter extraction of the solar PV cell. Section 3 introduces the bat and modified bat algorithm. Section 4 presents the parameter extraction results with comparison and finally, the conclusion is discussed in section 5.

## II. MODELING AND PROBLEM FORMULATION OF SOLAR CELL

The foremost objective of the proposed MBA method is to lessen the deviation of current and voltage of the measured and simulated values. The two widely used models such as OD and TD models are used to portray the performance of solar cells. Various parameters of both the models are the diode current ($I_D$ for OD model and $I_{D1}$ and $I_{D2}$ for the TD model), series resistance ($R_S$), the photovoltaic current ($I_{PV}$), shunt resistance ($R_{SH}$), and the diode ideality factor (P for OD model and $P_1$ and $P_2$ for the TD model). Hence, the OD model and TD models should be extracted five and seven parameters respectively.

### A. OD Model

The solar cell model using one diode is shown in Fig. 1. Using Kirchoff's current law, the output current, $I_o$, of the solar cell can be expressed as:

$$I_o = I_{PV} - I_D - I_{SH} \quad (1)$$

where $I_{PV}$, $I_D$, and $I_{SH}$ are represented as the photocurrent generated, current of the diode, and the current across the shunt resistance respectively. In the OD model, the Shockley equation is used to estimate the $I_D$ and it can be expressed as:

$$I_D = I_{sd}[\exp(V_o + I_o R_S)/PV_T] - 1 \quad (2)$$

where $I_{sd}$, $V_o$, and P represents the reverse saturation current, output voltage, and ideality factor of the diode respectively.

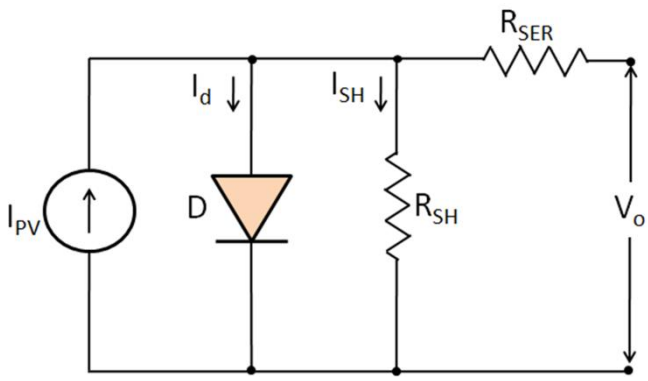


Fig. 1. OD model of a solar cell.

The thermal voltage $V_T = kT_c/q$ and the shunt current $I_{SH} = (V_o + I_o R_{SER})/R_{SH}$. where k, $T_c$, and q represents the Boltzmann's constant ($1.380\times10^{-23}$ J/K), the absolute temperature of the cell, and charge of the electrons ($1.602\times10^{-19}$ C) respectively. Now (1) can be written based on [20,21] as:

$$I_o = I_{PV} - I_{sd}\left[\exp\left(\frac{q(V_o+R_S T)}{PkT_c}\right) - 1\right] - \left(\frac{V_o+R_S I_o}{R_{SH}}\right) \quad (3)$$

Hence, from the given I-V data set the five parameters such as $R_S$, $R_{SH}$, $I_{sd}$, $I_{PV,}$ and P of an OD model can be extracted.

### B. TD Model

The solar cell model using a two diode is shown in Fig. 2. Using Kirchoff's current law, the output current, $I_o$, of the solar cell can be expressed as:

$$I_o = I_{PV} - I_{D1} - I_{D2} - I_{SH} \quad (4)$$

The diode current $I_{d1}$ and $I_{d2}$ of TD model can be estimated using the Shockley equation as:

$$I_{D1} = I_{sd1}\left[\exp\left(\frac{V_o+I_o R_S}{P_1 V_T}\right) - 1\right] \quad (5)$$

$$I_{D2} = I_{sd2}\left[\exp\left(\frac{V_o+I_o R_S}{P_2 V_T}\right) - 1\right] \quad (6)$$

Now, the output current of TD model can be written based on [22] as:

$$I_o = I_{PV} - I_{sd1}\left[\exp\left(\frac{q(V_o+R_S I_o)}{P_1 kT_c}\right) - 1\right] - I_{sd2}\left[\exp\left(\frac{q(V_o+R_S I_o)}{P_2 kT_c}\right) - 1 - Vo + RSIoRSH\right. \quad (7)$$

Hence, from the given I-V data set the seven parameters such as $R_S$, $R_{SH}$, $I_{sd1}$, $I_{sd2}$,$I_{PV,}$ $P_1$, and $P_2$ of a TD model can be extracted.

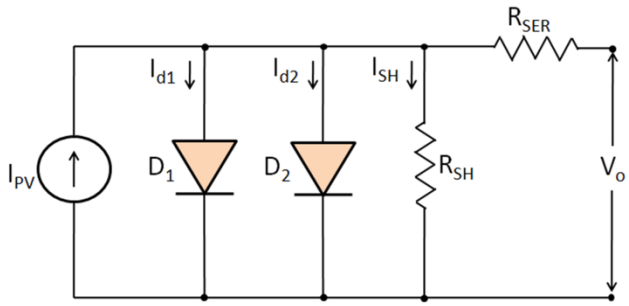


Fig. 2. TD model of a solar cell.

### C. Formulation of Solar Cell Parameter Extraction

Optimization techniques are used to extract various parameters of the solar PV cell model. An objective function is defined as suitable for the proposed MBA to optimize the parameter extraction problem. The parameter values are tuned until the optimal value of the objective function is achieved. In this paper, the unknown parameter vector Y is taken and the root means squared error (RMSE) criterion is used to define the objective function.

$$RMSE(Y) = \sqrt{\frac{1}{N}\sum_{i=1}^{N} X(V_o, I_o, Y)^2} \quad (8)$$

where $f(V_o, I_o, Y)$ represents the error function and its value should be minimized. The error function of OD model can be expressed as:

$$X(V_o, I_o, Y) = I_{PV} - I_{sd}\left[\exp\left(\frac{q(V_o+R_S T)}{PkT_c}\right) - 1\right] - \left(\frac{V_o+R_S I_o}{R_{SH}}\right) \quad (9)$$

The error function of TD model can be expressed as:

$$X(V_o, I_o, Y) = I_{PV} - I_{sd1}\left[\exp\left(\frac{q(V_o+R_S I_o)}{P_1 kT_c}\right) - 1\right] - I_{sd2}\left[\exp\left(\frac{q(V_o+R_S I_o)}{P_2 kT_c}\right) - 1\right] - \left(\frac{V_o+R_S I_o}{R_{SH}}\right) \quad (10)$$

In Eq. (9) and Eq. (10), $V_o$ and $I_o$ represents the experimental voltage and current of the solar PV cell, Y represents the unknown parameter vector of OD model, Y=( $I_{PV}$ $R_{SH}$, $R_S$, $I_{sd}$, P) and TD model, Y=( $I_{PV}$ $R_{SH}$, $R_S$, $I_{sd1}$, $I_{sd2}$, $P_1$, $P_2$).

## III. BAT ALGORITHM

Bat algorithm (BA) is a population-based algorithm suggested by Yang in 2010 [24]. BA maintains N microbats, which flies randomly with the velocity ($v_i$), position ($p_i$), pulse emission rate $r_i \epsilon [0,1]$, and varying loudness ($A_i$). During the optimization process, the values of the error function are taken randomly to every bat and drawn uniformly from ($X_{min}$, $X_{max}$). The $v_i$ and $p_i$ of each bat are defined for the time step t can be expressed as:

$$X_j = X_{min} + (X_{max} - X_{min})\gamma \quad (10)$$

$$v_j^{t+1} = v_j^t + (p_j^t - p^*)X_j \quad (11)$$

$$p_j^{t+1} = p_j^t + v_j^{t+1} \quad (12)$$

where γ is a uniformly distributed random vector, $P^*$ is the global best solution from all the solutions. A large number of N provides a guarantee in extracting various parameters of solar PV cells. On the other hand, the convergence time will increase if a small number of N and the parameter extraction accuracy of the algorithm is also less. The new solution can be generated by BA is as follows:

$$v_j^k = \omega v_j^{k-1} + (G_{best} - G_j^{k-1})V_j \quad (13)$$

$$G_{j,new}^k = G_j^{k-1} + v_j^k \quad (14)$$

where ω is the weight factor used to limit the speed of the small bats, the term $G_{best} - G_j^{k-1}$ denoted the search direction [29]. The exploration stage and the exploitation stage of the parameter extraction can be ensured by a locally generated solution. A random walk is performed around the best solution ($G_{best}$) for generating the local solution and it can be expressed as:

$$G_{j,new}^k = G_{best} + \rho \emptyset D^{k-1} \quad (15)$$

where $\rho \epsilon (-1,1)$, $D^{k-1}$, and ϕ represents a uniform random number, average loudness of all the bats, fixed positive number used to limit the random walk respectively. The fitness of the objective function can be improved by the condition $P(G_{j,new}^k) > P(G_j^{k-1})$ and the received signal amplitude is lesser than the random number amplitude, then it will be a new solution.

### A. Modified Bat Algorithm

In bat algorithm, the uneven distribution may happen due to initial random assignment. As a result, premature convergence will arise. The uniformity and ergodicity of the population of BA are improved by the modified bat algorithm (MBA) using chaos search strategy. The flow chart of the proposed MBA is shown in Fig. 3. In this method, the individual is exchanged in the range (-1,1). According to the linear transformation [30], the original position can be found from the chaos sequence. The pseudocode steps involved in MBA are as follows:

1) Parameter initialization: N number of bats with search range ($X_{min}$, $X_{max}$), initial loudness ($A_i$), upper and lower bound limit (L,U), initial pulse rate ($r_j$), maximum iteration number ($I_{max}$).

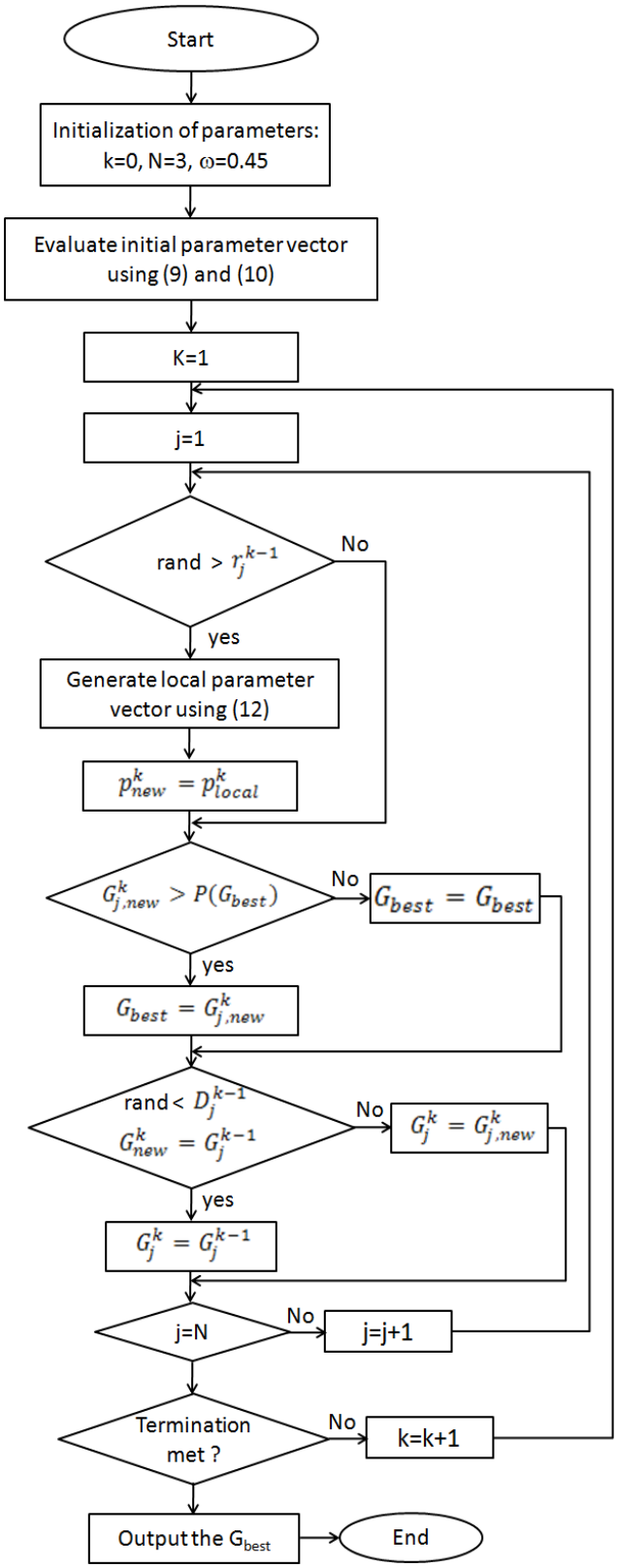


Fig. 3. Flow diagram of modified bat algorithm

2) According to the chaos strategy the initial position is assigned and fitness will be estimated and recorded.

3) If the pulse frequency is less than the randomness, the best position also perturbed according to the random distribution.

4) If soundness is less than the randomness of the $n^{th}$ iteration, it will be updated based on the local search.

5) Based on the newest position estimate the fitness value and record them, change the searching range according to the contraction equation.
6) Stop the run and produce the best value if the maximum iteration reached.

## IV. RESULTS AND DISCUSSION

In this section, various parameters of two different diode models are described in detail. The recital of the proposed MBA algorithm is evaluated for an OD and TD model of different PV cells. Several optimization techniques are chosen to estimate the recital of the proposed MBA. Bat is one of the population-based algorithms that have an echolocation feature of microbats, originally developed by Yang [24]. The parameter values are updated according to the iteration, the values of the objective function, and loudness. The complicated task of tuning parameter of the birds mating optimizer (BMO) is eliminated by the simplified BMO (SBMO) [25]. The ABC is also a well-known swarm optimization algorithm has an intelligent behavior of the honeybees. The previous studies show that the suitability of SBMO and ABC in the parameter extraction of solar cells [26]. Therefore, SBMO, ABC, and BA are selected to be compared with the MBA. In addition, the effectiveness of the proposed MBA is validated by applying it with an industrial solar module SM 55.

### A. The Experimental Conditions

The I-V characteristics of the commercial silicon solar cell have 5.7 cm diameter, and the measured current and voltage at 1000 W/m$^2$ (33$^o$ C) [27] are used. There are 26 points of measured voltage and current ($V_o$, $I_o$), i.e. N=26 is listed in Table 1. The starting and ending boundary values of the OD and TD model are listed in Table 2.

Table 1. Measured current and voltage

| No. of Meas. (N) | $V_o$ (V) | $I_o$ (A) | No. of Meas. (N) | $V_o$ (V) | $I_o$ (A) |
|---|---|---|---|---|---|
| 1 | -0.2057 | 0.7640 | 14 | 0.4137 | 0.7280 |
| 2 | -0.1291 | 0.7620 | 15 | 0.4373 | 0.7065 |
| 3 | -0.0588 | 0.7605 | 16 | 0.4590 | 0.6755 |
| 4 | 0.0057 | 0.7605 | 17 | 0.4784 | 0.6320 |
| 5 | 0.0646 | 0.7600 | 18 | 0.4960 | 0.5730 |
| 6 | 0.1185 | 0.7590 | 19 | 0.5119 | 0.4990 |
| 7 | 0.1678 | 0.7570 | 20 | 0.5265 | 0.4130 |
| 8 | 0.2132 | 0.7570 | 21 | 0.5398 | 0.3165 |
| 9 | 0.2545 | 0.7555 | 22 | 0.5521 | 0.2120 |
| 10 | 0.2924 | 0.7540 | 23 | 0.5633 | 0.1035 |
| 11 | 0.3269 | 0.7505 | 24 | 0.5736 | -0.0100 |
| 12 | 0.3585 | 0.7465 | 25 | 0.5833 | -0.1320 |
| 13 | 0.3873 | 0.7385 | 26 | 0.5900 | -0.2100 |

Various parameters used in this study are listed as follows: MBA: $\alpha$=0.9, $\omega$=0.45, $\gamma$=0.6, $\Delta$d=0.01, and $\Delta$P=0.05; ABC: $N_p$=150, the limit for single diode model is $N_p$*5 and $N_p$*7 for the TD model [26]; SBMO: N=35 [25]. To compare the performance of various methods, ten small time period (0.1 s to 1.0 s) is taken for observing the changes in the optimization process. The coding is done using Matlab for all the algorithms and implemented on a desktop computer with Intel Core i7-5500U CPU, 3.2 GHz, 16 GB RAM.

Table 2. Starting and ending values of different parameters of diode models.

| Parameters | Starting value | Ending value |
|---|---|---|
| Single diode model | | |
| $I_{PV}$ (A) | 0 | 1 |
| $I_{sd}$ (µA) | 0 | 1 |
| $R_{SH}$ (Ω) | 0 | 100 |
| $R_{SER}$ (Ω) | 0 | 0.5 |
| P | 1 | 2 |
| Double diode model | | |
| $I_{PV}$ (A) | 0 | 1 |
| $I_{sd1}$ (µA) | 0 | 1 |
| $I_{sd2}$ (µA) | 0 | 1 |
| $R_{SH}$ (Ω) | 0 | 100 |
| $R_{SER}$ (Ω) | 0 | 0.5 |
| $P_1$ | 1 | 2 |
| $P_2$ | 1 | 2 |

To compare the correctness of the results, different parameters of fitness values such as the average ($S_{avg}$), minimal ($S_{min}$), maximal ($S_{max}$), and standard deviation ($S_{sd}$) are recorded and estimated. The threshold value for both the single diode and double diode model is set to 9.685E-04 and 9.870E-04 respectively. The fitness values less than the threshold value ($T_L$) obtained by the algorithm also calculated. The efficiency of these methods is compared by estimating the RMSE values of both the OD and TD models.

### B. Results on OD Model

The experimental results of the OD model using three different algorithms and the proposed MBA are illustrated in Fig. 4. Various fitness values such as the average, minimal, maximal, and standard deviation are plotted in Fig. 4 (a)-(d) respectively. From Fig. 4 it is observed that the MBA method has better performance than BA, ABC, and SBMO techniques. The obtained values of $S_{avg}$, $S_{min}$, $S_{max}$, and $S_{sd}$ at any running time are better for the proposed MBA compared to other methods. For the value of $S_{min}$, MBA provides better results in most cases excluding the fifth case compared to ABC. For the $S_{sd}$ values, the proposed MBA provides better results except in the fourth and ninth values as compared to ABC. Furthermore, all the running period for minimal fitness is 9.686E-04 for MBA. The number of fitness values obtained in the lesser threshold values for three different algorithms and the proposed MBA is listed in Table 3. The total $T_L$ obtained by BA, ABC, SBMO, and MBA is 4, 2, 5, and 39 respectively. Compared to all other algorithms the MBA provides better accuracy and robustness.

Various parameters extracted for a single diode model including RMSE for different optimization algorithm are listed in Table 4. The soft computing algorithms such as Levenberg-Marquardt algorithm combined with simulated annealing (LM-SA) [28], PSO [12], and GA [13] are taken

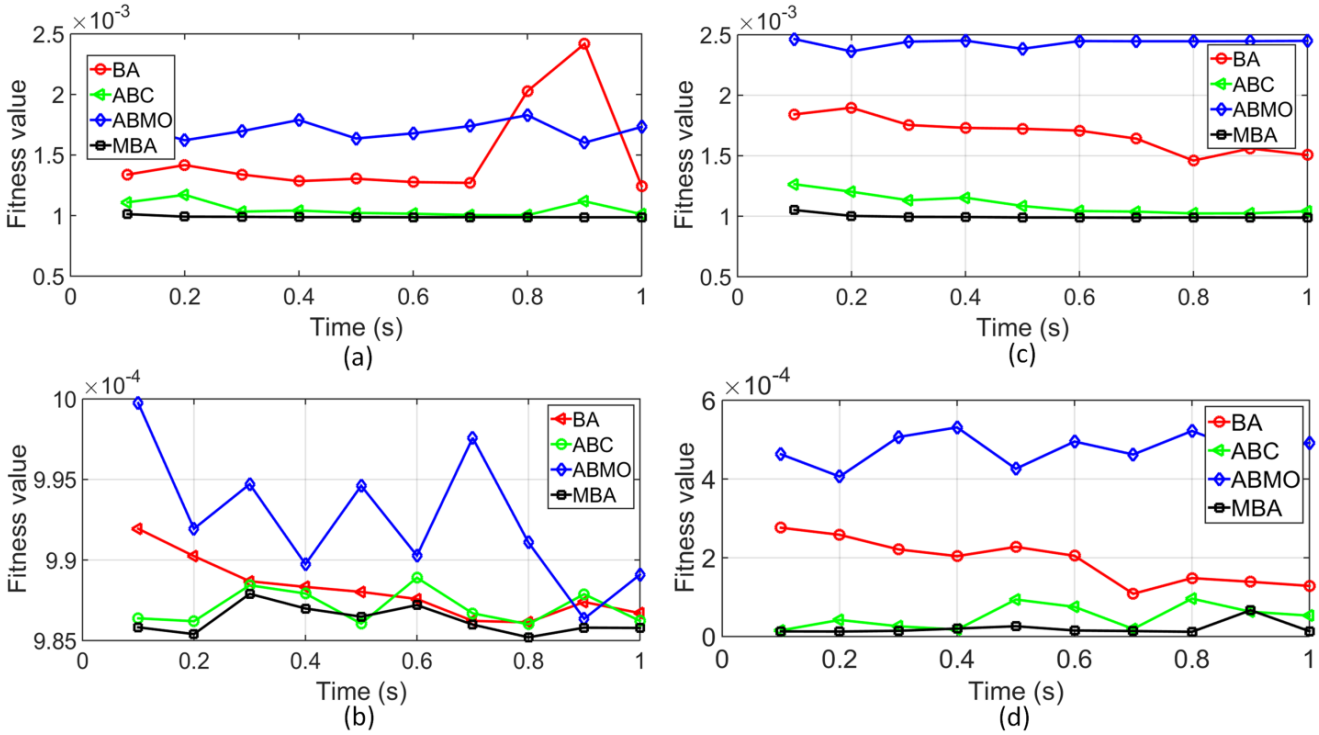


Fig. 4. The optimal values achieved by BA, ABC, SBMO, and MBA for the OD model (a) average (b) minimal (c) maximal (d) standard deviation.

Table 3. The value of $T_L$ obtained by BA, ABC, SBMO and MBA for the single diode model.

| Time (s) | BA | ABC | SBMO | MBA |
|---|---|---|---|---|
| 0.1 | 0 | 0 | 0 | 0 |
| 0.2 | 1 | 1 | 1 | 1 |
| 0.3 | 0 | 0 | 0 | 2 |
| 0.4 | 2 | 1 | 1 | 2 |
| 0.5 | 0 | 0 | 0 | 2 |
| 0.6 | 1 | 0 | 2 | 6 |
| 0.7 | 0 | 0 | 0 | 5 |
| 0.8 | 0 | 0 | 0 | 7 |
| 0.9 | 1 | 0 | 1 | 10 |
| 1.0 | 0 | 0 | 0 | 4 |
| Total | 4 | 2 | 5 | 39 |

for comparison. It is observed from Table 4 that the proposed MBA produce lesser RMSE compared to other algorithms. From Table 4, one can easily understand that the SBMO and BA have the second and third lowest RMSE compared to MBA.

From the obtained optimal solution of MBA, the I-V curve is calculated and illustrated in Fig. 5. It is observed from Fig. 5 that very minor deviation is present between a few values of the experimental and calculated data. The result indicates that the estimated data is exactly fit with the experimental data of the PV cell.

### C. Results on TD Model

Various parameters such as $S_{avg}$, $S_{min}$, $S_{max}$, and $S_{sd}$ of TD model is extracted from the experimental result using the proposed MBA with three different algorithms is illustrated in Fig. 6. The average value of fitness, $S_{avg}$ is shown in Fig. 6(a). From the $S_{avg}$ of fitness values of different algorithms,

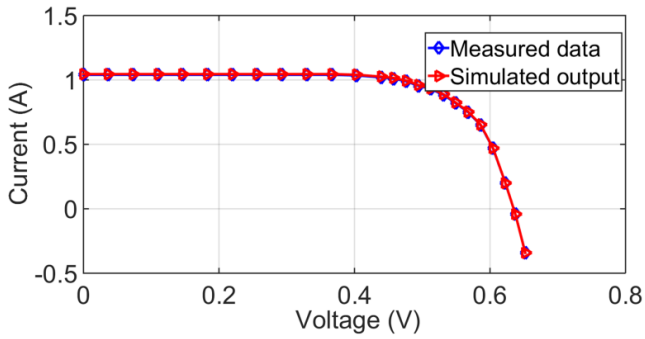


**Fig. 5. Simulated and experimental I-V curve for the OD model.**

the proposed MBA outperforms other optimization techniques. The minimal, maximal, and standard deviation of fitness is shown in Fig. 6(b), (c), and (d) respectively. For the $S_{min}$ case, the proposed MBA provides the best result except for s0.2 s and 0.9 s. The proposed MBA produces better results than other optimization techniques for all the other cases. The number of fitness values obtained in the lesser threshold values for three different algorithms and the proposed MBA is listed in Table 5. The proposed MBA obtained the total number of fitness in the lesser threshold value is 63, whereas other techniques such as BA, ABC, and SBMO obtained 7, 17, and 9 respectively.

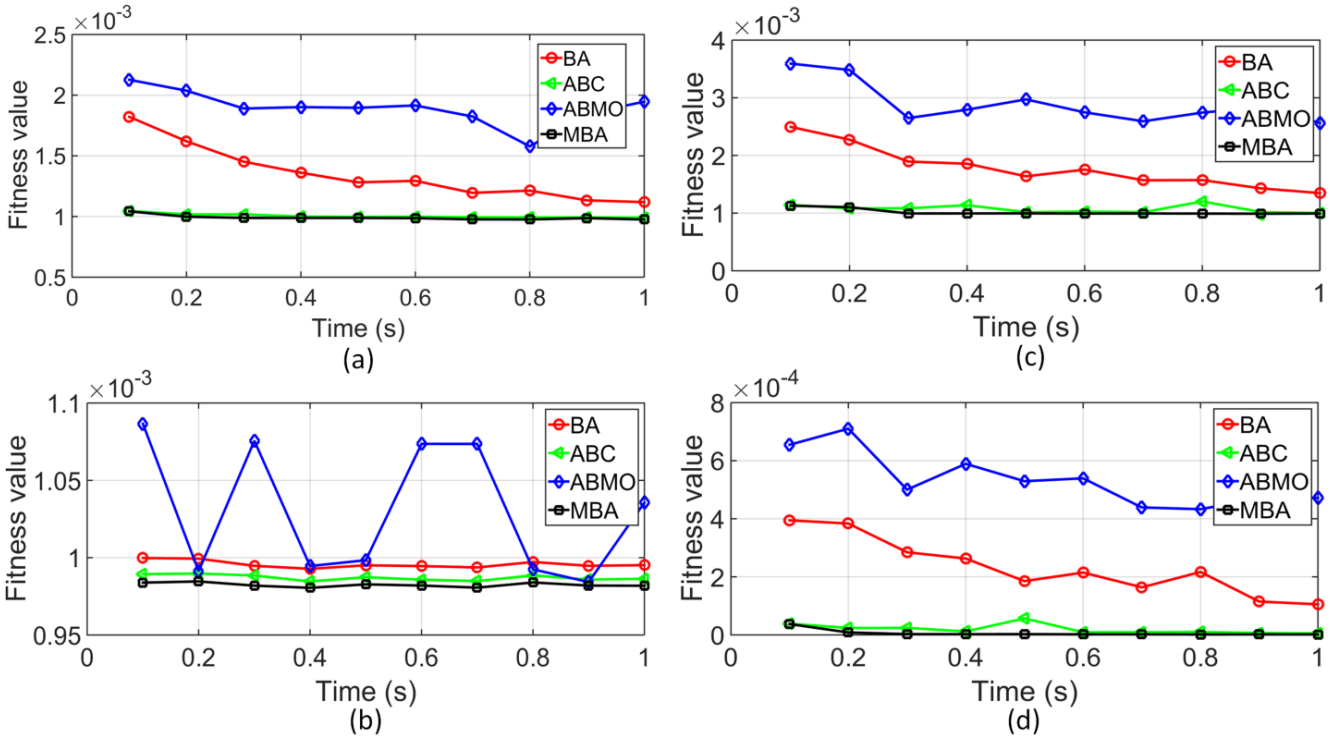


Fig. 6. The optimal values achieved by BA, ABC, SBMO and MBA for the TD model (a) average (b) minimal (c) maximal (d) standard deviation.

Table 4. The results of various parameters extracted by different optimization techniques for OD model.

| Algorithm | Parameters | | | | | |
|---|---|---|---|---|---|---|
| | $I_{PV}$ (A) | $I_{sd}$ (μA) | $R_{SH}$ (Ω) | $R_{SER}$ (Ω) | P | RMSE |
| BA | 0.7635784 | 0.322462 | 54.21473 | 0.035274 | 1.483724 | 9.87621E-04 |
| ABC | 0.7635954 | 0.321472 | 53.57358 | 0.034243 | 1.482926 | 9.87127E-04 |
| SBMO | 0.7631636 | 0.329425 | 53.18619 | 0.034268 | 1.483168 | 9.87375E-04 |
| MBA | 0.7630362 | 0.331537 | 53.72499 | 0.034148 | 1.482173 | **9.86925E-04** |
| PSO | 0.7603256 | 0.402135 | 58.62854 | 0.035260 | 1.519735 | 1.41042E-03 |
| LM-SA | 0.7602373 | 0.316390 | 54.14254 | 0.037426 | 1.492483 | 9.89255E-04 |
| GA | 0.7603652 | 0.727389 | 45.55481 | 0.028936 | 1.618303 | 1.79372E-02 |

Table 5. The value of $T_L$ obtained by BA, ABC, SBMO and MBA for the TD model.

| Time (s) | BA | ABC | SBMO | MBA |
|---|---|---|---|---|
| 0.1 | 0 | 0 | 0 | 0 |
| 0.2 | 1 | 1 | 1 | 0 |
| 0.3 | 1 | 2 | 0 | 2 |
| 0.4 | 2 | 3 | 1 | 5 |
| 0.5 | 0 | 1 | 1 | 8 |
| 0.6 | 1 | 0 | 2 | 5 |
| 0.7 | 2 | 2 | 0 | 9 |
| 0.8 | 0 | 1 | 2 | 10 |
| 0.9 | 1 | 3 | 2 | 11 |
| 1.0 | 0 | 4 | 0 | 13 |
| Total | 7 | 17 | 9 | 63 |

Various parameters extracted for double diode model including RMSE for different optimization algorithm is listed in Table 6. Various optimization techniques such as Levenberg–Marquardt algorithm combined with simulated annealing (LM-SA) [28], PSO [12], and GA [13] are taken for comparison and the RMSE is listed in Table 6.

It is observed from Table 6 that most of the optimization algorithms provide the RMSE lesser than 0.001. Furthermore, the proposed MBA provides less RMSE compared to other optimization techniques. From the obtained optimal solution of MBA, the I-V curve is calculated and shown in Fig. 7. It is observed from Fig. 7 that little deviation is present between the estimated and

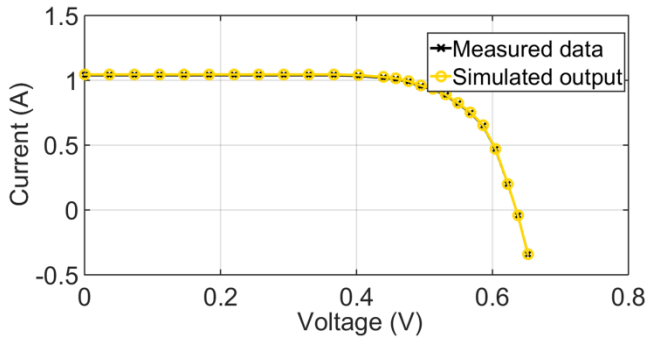


Fig. 7. Simulated and experimental I-V curve for the TD model.

experimental values. The result indicates that the estimated values of the PV cell exactly fit with the experimental data.

### D. Validating Results

The I-V curve of a Siemens solar module (SM 55) is applied for both the OD and TD model of parameter extraction for validating the effectiveness of the proposed MBA algorithm. various parameters of a mono-crystalline PV cell, SM 55 is measured at 1000 W/m$^2$ and is listed in Table 7. The extracted parameters of OD and TD model using MBA for the SM 55 solar PV panel including RMSE is listed in Table 8. It is observed from Table 8 that the proposed MBA produces lesser RMSE and almost equal for OD and TD models. Finally, the parameters of the solar module, SM 55, are applied to Eq. 3 and Eq. 7 for simulating the characteristics (I-V) of both the OD and TD model. The comparison results between the measured and simulated data are illustrated in Fig. 8. It is observed from Fig. 8(a) and (b) that a good agreement between the experimental and measured data for both the OD and TD model. Hence, the proposed MBA algorithm is capable of extracting parameters of solar cells.

Table 6. The results of various parameters extracted by different algorithms for double diode model.

| Algorithm | Parameters | | | | | | | |
|---|---|---|---|---|---|---|---|---|
| | $I_{PV}$ (A) | $I_{sd1}$ (μA) | $I_{sd2}$ (μA) | $R_{SH}$ (Ω) | $R_{SER}$ (Ω) | $P_1$ | $P_2$ | RMSE |
| BA | 0.7638252 | 0.291539 | 0.671026 | 56.42822 | 0.036281 | 1.502629 | 1.436723 | 9.97483E-04 |
| ABC | 0.7639423 | 0.283481 | 0.983521 | 56.30461 | 0.034385 | 1.483932 | 1.992363 | 9.86348E-04 |
| SBMO | 0.7639924 | 0.192438 | 0.672416 | 56.29620 | 0.036283 | 1.436934 | 1.984354 | 9.99443E-04 |
| MBA | 0.7639103 | 0.289261 | 0.683422 | 56.47291 | 0.033926 | 1.448238 | 1.949037 | **9.82745E-04** |
| PSO | 0.7649826 | 0.203621 | 0.376923 | 48.50472 | 0.035381 | 1.548238 | 1.482383 | 1.72354E-03 |
| LM-SA | 0.7669202 | 0.129836 | 0.019002 | 45.36402 | 0.042730 | 1.518342 | 2.003521 | 8.75735E-03 |
| GA | 0.7661939 | 0.002832 | 0.002841 | 52.39739 | 0.025283 | 1.337472 | 1.510036 | 1.79372E-01 |

Table 7. Various parameters of SM 55.

| Voc (V) | Isc (A) | $V_{MPP}$ (V) | $I_{MPP}$(A) | Max. Power (W) | Cell temperature (°C) |
|---|---|---|---|---|---|
| 21.7 | 3.45 | 17.4 | 3.15 | 55 | 25°C at 1000 W/m$^2$ |

Table 8. Various extracted parameters of OD and TD model for SM 55 PV module.

| Model | Values |
|---|---|
| Single diode | |
| $I_{PV}$ (A) | 21.7682 |
| $I_{sd}$ (μA) | 0.00536 |
| $R_{SH}$ (Ω) | 268.7224 |
| $R_{SER}$ (Ω) | 0.02147 |
| P | 1.68538 |
| RMSE | 1.9364 E-02 |
| Double diode | |
| $I_{PV}$ (A) | 21.7475 |
| $I_{sd1}$ (μA) | 0.003246 |
| $I_{sd2}$ (μA) | 0.000167 |
| $R_{SH}$ (Ω) | 353.7513 |
| $R_{SER}$ (Ω) | 0.024674 |
| $P_1$ | 1.691279 |
| $P_2$ | 2.632962 |
| RMSE | 1.93649 E-02 |

## V. CONCLUSION

This article presents a modified bat algorithm for extracting various parameters of solar PV cells. The MBA method has a chaos search mechanism for efficiently handling the parameters. Initially, the proposed MBA is compared with other optimization techniques such as BA, ABC, and SBMO. The comparison result shows that MBA outperforms BA, ABC, and SBMO. It is important to emphasize that the RMSE of the MBA method is lesser in both the OD and TD models compared with other optimization techniques. Then, to validate the performance of the MBA, it is applied to a monocrystalline solar module, SM 55 for parameter extraction problem. The I-V characteristics show that the measured and simulated values are exactly matched and little error is present in few values. Finally, the authors conclude that the MBA algorithm is an effective alternative approach for parameter extraction for solar PV cell models.

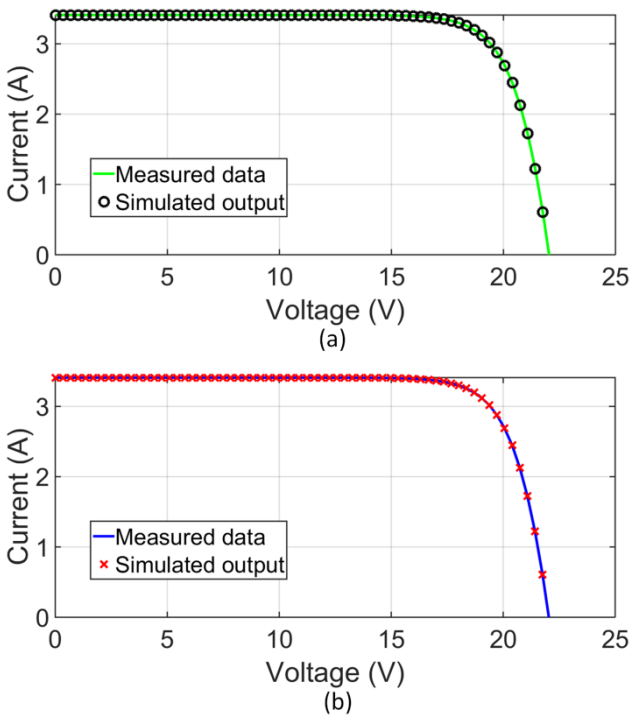


Fig. 8. Comparison between simulated and experimental result of SM 55 (a) OD model (b) TD model.

## REFERENCES

1. G. K. Singh, "Solar power generation by PV (photovoltaic) technology: a review," *Energy*, vol. 53, 2013, pp. 1-13.
2. C. Chellaswamy, R. Ramesh, "Parameter extraction of solar cell models based on adaptive differential evolution algorithm," *Renewable Energy*, vol. 97, 2016, pp. 823-837.

3. D. F. Alam, D. A. Yousri, M. B. Eteiba, "Flower pollination algorithm based solar PV parameter estimation," *Energy Convers. Manage.*, vol. 101, 2015, pp. 410-422.
4. G. M. Tina, F. Cosentino, C. Ventura, "Monitoring and diagnostics of photovoltaic power plants. Renewable Energy in the Service of Mankind," vol. II. Springer International Publishing, 2016. pp. 505-516.
5. AM. Humada, M. Hojabri, S. Mekhilef, HM. Hamada, "Solar cell parameters extraction based on single and double-diode models: a review, *Renew Sustain Energy Rev*., vol. 56, 2016, pp. 494-509.
6. VJ. Chin, Z. Salam, K. Ishaque, "An accurate modelling of the two-diode model of PV module using a hybrid solution based on differential evolution, *Energy Convers Manage*., vol. 124, 2016, pp. 42-50.
7. M. Chegaar, Z. Ouennoughi, A. Hoffmann, "A new method for evaluating illuminated solar cell parameters," *Solid-State Electron*, vol. 45 (2), 2001, pp. 293-296.
8. T. Easwarakhanthan, J. Bottin, L. Bouhouch, C. Boutrit, "Nonlinear minimization algorithm for determining the solar cell parameters with microcomputers," *Int. J. Sol. Energy*, vol. 4 (1), 1986, pp. 1-12.
9. K. Ishaque, Z. Salam, H. Taheri, A. Shamsudin, "A critical evaluation of EA computational methods for Photovoltaic cell parameter extraction based on two diode model," *Sol Energy*, vol. 85, 2011, pp. 176-79.
10. A. Askarzadeh, Dos Santos, L. Coelho, "Determination of photovoltaic modules parameters at different operating conditions using a novel bird mating optimizer approach," *Energy Convers. Manage.*, vol. 89, 2015, pp. 608-614.
11. C. Zhang, J. Zhang, Y. Hao, Z. Lin, C. Zhu, "A simple and efficient solar cell parameter extraction method from a single current-voltage curve," *J. Appl. Phys*., vol. 110 (6), 2011, 064504.
12. M. Ye, X. Wang, Y. Xu, "Parameter extraction of solar cells using particle swarm optimization," *J. Appl. Phys.* vol. 105 (9), 2009, pp. 094502-094508.
13. D. Oliva, E. Cuevas, G. Pajares, "Parameter identification of solar cells using artificial bee colony optimization," *Energy*, vol. 72, 2014, pp. 93-102.
14. K. M. El-Naggar, M. R. AlRashidi, M. F. AlHajri, A. K. Al-Othman, "Simulated annealing algorithm for photovoltaic parameters identification," *Sol. Energy*, vol. 86 (1), 2012, pp. 266-274.
15. J. A. Jervase, H. Bourdoucen, A. Al-Lawati, "Solar cell parameter extraction using genetic algorithms," *Meas. Sci. Technol*. vol 12 (11), 2001, pp. 1922-1925.
16. C. Chellaswamy, R. Muthammal, T. S. Geetha, "A New Methodology for Optimal Rail Track Condition Measurement Using Acceleration Signals", *Measurement Science and Technology*, vol. 29(7), 2018, pp. 1-16.
17. M. Ji, Z. Jin, H. Tang, "An improved simulated annealing for solving the linear constrained optimization problems," *Appl. Math. Comput*. vol. 183, 2006, pp. 251-259.
18. M. Ye, X. Wang, Y. Xu, "An extraction method of solar cell parameters with improved particle swarm optimization," *J. Appl. Phys.*, vol. 105, 2009, pp. 1099-1104.
19. J. Tvrdik, "Adaptation in differential evolution: a numerical comparison," *Appl. Soft Comput*. vol. 9, 2009, pp. 1149-1155.
20. H. M. Tian, F. Mancilla David, K. Ellis, E. Muljadi, P. Jenkins, "A cell-to-module-to-array detailed model for photovoltaic panels," *Sol. Energy Mater. Sol. Cells*, vol. 86 (9), 2012, pp. 2695-2706
21. C. Chellaswamy, V. Nagaraju, R. Muthammal, "Solar and Wind Energy Based Charging Station for Electric Vehicles", *International Journal of Advanced Research in Electrical, Electronics and Instrumentation Engineering*, vol. 7(1), 2018, pp. 313-324.
22. K. Ishaque, Z. Salam, H. Taheri, "A comprehensive MATLAB simulink PV system simulated with partial shading capability based on two-diode model," *Sol. Energy*, vol. 85, 2011, pp. 2217-2227.
23. C. Chellaswamy, R. Ramesh, "An optimal parameter extraction and crack identification method for solar photovoltaic modules", *ARPN Journal of Engineering and Applied Sciences*, vol. 11, no. 24, 2016, pp. 14468-14481.
24. X. S. Yang, "A new metaheuristic bat-inspired algorithm," *In: Nature Inspired Cooperative Strategies for Optimization (NICSO 2010)*. Springer, 2010. pp. 65-74.
25. A. Askarzadeh, Dos Santos, L. Coelho, "Determination of photovoltaic modules parameters at different operating conditions using a novel bird mating optimizer approach," *Energy Convers. Manage.*vol. 89, 2015, pp. 608-614.
26. D. Oliva, E, Cuevas, G. Pajares, "Parameter identification of solar cells using artificial bee colony optimization," *Energy*, vol. 72, 2014, pp. 93-102.
27. T. Easwarakhanthan, J. Bottin, L. Bouhouch, C. Boutrit, "Nonlinear minimization algorithm for determining the solar cell parameters with microcomputers," *Int. J. Sol. Energy*. vol. 4 (1), 1986, pp. 1-12.
28. F. Dkhichi, B. Oukarfi, A. Fakkar, et al. "Parameter identification of solar cell model using Levenberg–Marquardt algorithm combined with simulated annealing," *Sol. Energy*, vol. 110, 2014, pp. 781-788.
29. Yilmaz, E. U. Kucuksille, "Improved bat algorithm (iba) on continuous optimization problems," *Lect. Notes Software Eng*.. vol. 1 (3), 2013, 279.
30. Changping Liu, Chunming Ye, "Bat Algorithm with Chaotic Search Strategy and Analysis of Its Property [J]," Journal of System Simulation, vol. 25(6), 2013, pp. 1183-1195.


## AUTHORS PROFILE

**CHELLASWAMY C** received the B.E degree in electronics and communication engineering from Madurai Kamaraj University, Tamilnadu, India, in 1994, the Post the graduate degree in applied electronics from Sathyabama University, Chennai, India, in 2005, and the Ph.D. degree in electronics and communication engineering from St. Peters University, Chennai, India, in 2017. He is currently with the Lords Institute of Technology, Hyderabad as Professor and Head of electronics and communication engineering department. His professional services include - but are not limited to - Industry Consultations, a Workshops Chair, a Technical Program Committee Member, and a Reviewer for several international journals and conferences. He has authored over 60 scientific research articles in referred international journals and conferences. His research interests include energy management systems, solar PV systems, intelligent autonomous systems; remote monitoring, IoT based system design, and inspired optimization algorithms.

**MUTHAMMAL R** working as Professor in Saveetha Engineering College, Chennai. She has completed her M.Tech in Indian Institute of Technology, Chennai, India and has completed her PhD in St. Peter's University, India. Her area of interests includes VLSI and Networking, Signal Processing, Measurements and Instrumentation. She has about 20 years of experience in teaching and published number of referred national and international journals. Her research interests include VLSI and Networking, solar PV systems, Measurement and Instrumentation Systems, and inspired optimization algorithms. She is an associate member in IE (India) and a life member of ISTE.

**Geetha T S** working as Associate Professor in Sriram Engineering College, Chennai. She has completed her bachelor's degree in electronics and communication engineering at MIT campus Anna University Chennai then completed Masters degree in Communication systems at Crescent Engineering College under Anna University. She completed her doctorate in Renewable Energy at Vels University Chennai. She has 9 years of industrial experience and 13 years of academic experience. Her research interests include mobile networks, digital communication, computer networks, and optical communication.