Renewable Energy Fed BLDC Motor with DC- DC Converter by Implementing MPPT Technique for EV Application

Priya S, Rajesh Uppara

Abstract*: This paper discuss about operation of BLDC motor for electric vehicle application using stand-alone PV system. The requirement of energy on the earth is increasing rapidly due to population increase and the improvement in standard of living. The energy status of the country is directly related to economic activity of the country, with decrease in fossil fuels and increase in power demand, renewable energy sources have emerged and are playing an important role to overcome the present scenario. In this paper the design, performance and analysis of Ćuk converter with implementation of MPPT Technique (Maximum Power Point Tracking) is included, so that maximum power available from PV module can be extracted, which leads to increase in the performance of the BLDC Motor. To improve the efficiency of the energy generated by PV panel requires incremental conductance method of MPPT technique. The DC-DC Ćuk converter with incremental conductance MPPT controller will generates the power with higher precision. The simulations are carried on BLDC motor load using Ćuk converter fed from a PV system in PSIM environment. The results are discussed

Index Terms*: BLDC Motor, Ćuk converter, PV array, Incremental conductance method, MPPT, VSI, EV's

I. INTRODUCTION

A. PV system

The solar is one of the cleanest forms of energy which have longer life span and offers high reliability, hence it can be considered as one of the most suitable renewable energy. Solar PV modules are more suitable and prominent solution for domestic and industrial applications, the output voltage of panel is a fluctuating DC voltage; varies according to light intensity and temperature.

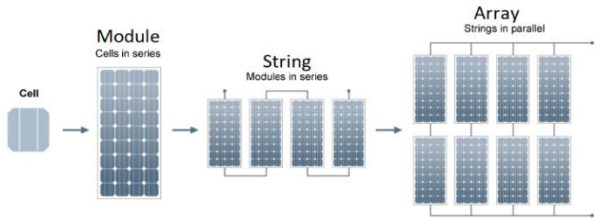

Figure 1 : Solar cell Configuration

Each solar PV cells are connected with series configuration forming a module and those modules are connected in a parallel to form an array. These cells are the basic blocks of PV system. PV array is a complete power-generating unit, which includes number of modules and panel as shown in fig 1

B. Working of system

In the proposed method the output of PV is fed to DC- DC Ćuk converter and the switching device is controlled through MPPT controller which extract the maximum power from Solar PV array [12][3]. The Ćuk converter will operate either in boost mode or buck mode depends on availability of energy from solar. To harvest the generated electrical energy from photo voltaic modules requires proper duty ratio operation of MOSFET switch. When the sunlight falls on the solar panel, the conversion of light energy into electrical energy takes place, and the output voltage of solar PV array is applied to the DC – DC converter (Ćuk converter), here the intensity of sun light and temperature will be varying, but let us take a instantaneous value (constant value) hence the V source is constant. When V source is applied to the Ćuk converter, it will higher or lower the voltage applied (V source) applied across it, the magnitude of the output voltage from Ćuk converter depends upon the duty ratio (D). Ćukout (output voltage) is directly proportional to the duty ratio (D), hence magnitude of the output voltage is higher when duty ratio is higher and lower if duty ratio is lower. This constant DC output voltage cannot be fed directly to BLDC [2] motor; hence it must be converted in to AC voltage. So, the output of the converter circuit is directly fed into voltage source inverter circuit (VSI)[3], which will convert the given input DC voltage into AC voltage. This constant AC voltage is applied to BLDC motor, here the input voltage is constant hence the speed of the motor is also constant.

C. DC-DC Converter

Ćuk converter is switched mode DC – DC converter, it is same as buck-boost [11] (DC-DC) converter but its voltage at output is of inverting topology [11]. The main energy storage component of the Ćuk converter is its capacitor, unlike other DC – DC converters which uses inductor as their main energy storage element. Ćuk converter is highly suitable for EV application because it has high efficiency when compared to the other DC - DC converters, and the output can either higher than input voltage or lower than input voltage, so Ćuk converter is used as a voltage regulator, hence can have control over the output voltage by varying its duty ratio (D) for a variable input voltage.

D. BLDC Motor

The converter output voltage is fed to inverter (VSI) that converts dc to ac voltage. This ac voltage is connected as an input to the three phase brushless DC (BLDC) motor.

Revised Manuscript Received on December 22, 2018.
Priya S, Assistant Professor, SIT, TUMKUR, INDIA
Rajesh Uppara, Assistant Professor, SIT, TUMKUR, INDIA

It has many number of choices for choosing a motor for any type of application, our choices will depend upon various needs and factors, it may be cost, efficiency, torque, speed range. BLDC motor is used because of its high efficiency and vast speed range and life expectancy is about 10000 to 12000 hours, hence it is more reliable than other induction motors.

II. PROPOSED SCHEME

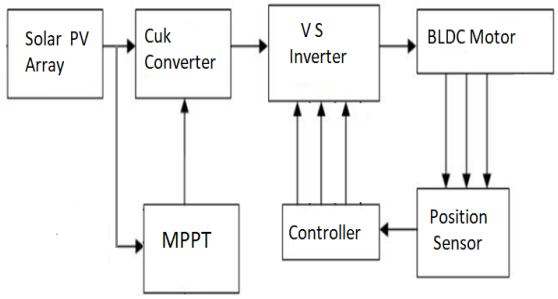

Figure 2 : Block diagram of proposed system with MPPT

A. Solar PV array

It converts light energy (intensity) to electrical energy (DC voltage source), the main component of the solar PV array is solar cells, which are constructed with P-N junction photodiodes with broad sensitive area of light. The equivalent circuit of an individual solar cell unit replicates a current source in parallel with a internal diode as shown in fig 3[5]. The current source output is directly proportional to the light intensity available on the cell.

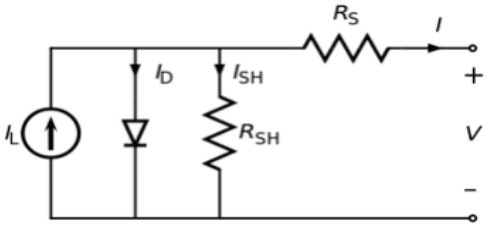

Figure.3. Circuit diagram of solar cell

B. MPPT: It is a technique used commonly with photovoltaic system. The principle of MPPT is to extract the maximum available power at solar PV array output during certain conditions.

C. Ćuk converter: It acts as an interface between the PV and inverter circuit connected to the three phase BLDC motor.

D. Voltage source inverter: Here the name inverter refers to a circuit which takes dc source as an input and generate the AC outputs; hence this type of inverters called as voltage source inverters. BLDC Motors are the 3-ϕ synchronous motors which consist of stator having 3-ϕ concentrated winding and permanent magnet rotors. It is free from commutator assembly and mechanical brushes. Hence has some limitations like sparkling issues, wear and tear of the brushes, electrical noise and brushes life as in conventional DC machine are eliminated in BLDC motors[6].

III. DESIGN & WORKING OF CUK CONVETER

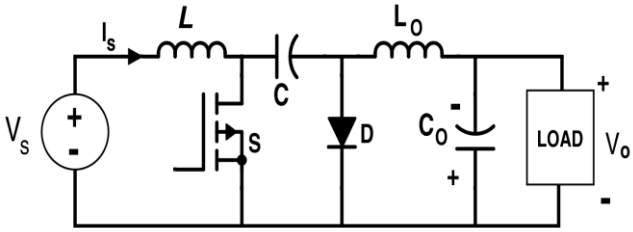

Figure 4. Ćuk converter circuit[3]

Ćuk converters are designed by cascading of buck converter follows a boost converter. The output voltages might be high or lower than that of input voltage and the output voltage polarity is reversed always. It assumes that output polarity is positive. The inductor near the input terminal will not allow large harmonic content, hence acts as a filter. Energy transfer for the Ćuk converter depends on the capacitor C1. While analyzing we assume that both inductors and both capacitors are very large and the current and voltage across them respectively are constant.

The voltage across the first capacitor, by applying KVL law to the outer loop

$$VC1=VS-VO \quad (1)$$

Now, let the switch be closed and the the diode is off , then current through the first capacitor would be (-IL2)

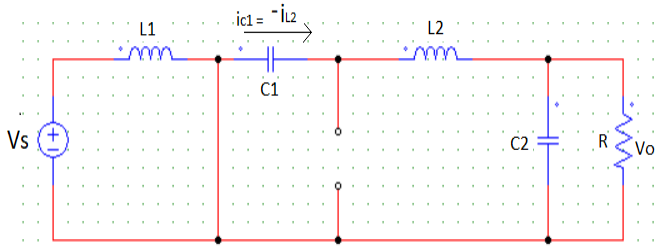

Figure 5 : Ćuk circuit with Switch closed

Now, let the switch be open and the diode is on due to current in L1 and L2, the current through the first capacitor would be (IL1)

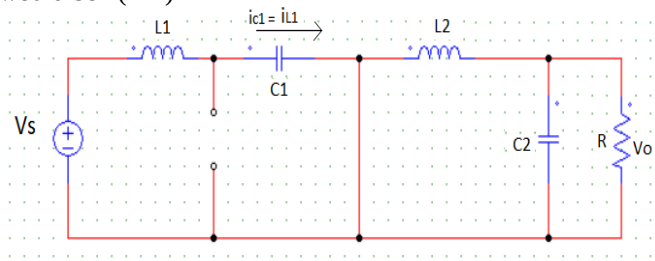

Figure 6 : Ćuk circuit with switch in open condition

Here, DT is the time for which the switch is ON and (1-D)T is the time for which the switch is OFF, where D is the duty ratio. But for a periodic operation, the average capacitor current is equal to zero .

Hence,

$$- IL2DT = IL1(1-D)T \quad (2)$$

$$IL1/ IL2 =D / (1-D) \quad (3)$$

But, power observed by load should be equal to power supplied by the source

Published By:
Blue Eyes Intelligence Engineering
& Sciences Publication

P source = P load

VS IL1= - VO IL2 (4)

Hence,

VO = -VS (D/(1-D)) (5)

Here the output voltage is dependent on duty ratio, hence we can vary the output voltage by varying the duty ratio D[1].

- **Duty cycle:** from output equation, V0= -Vs(D/(1-D)) ⇨ D=0.72
- **Capacitor: (o/p ripple<=1%)**

$$C1 >= \frac{VoD}{Rf\,\Delta vc1} = 180pF \qquad C2 >= \frac{VoD}{Rf(\Delta vo/vo)} = 0.03uF$$

- **Inductor: For continues current(Δi<=10%)**

$$L1 >= \frac{VsD}{f\,\Delta i_{L1}} = 500uH \qquad L2 >= \frac{VsD}{f\,\Delta i_{L2}} = 4mH$$

- **Diode specification:** No. IN4007
- **MOSFET specification:** N-channel MOSFET

Table 1: DC-DC converter output and corresponding motor speed calculated using PSIM for variable duty ratio

V panel Volts	V ćukout Volts	Duty ratio (D)	Motor Speed RPM
20.74	33.42	0.6170	361.67
20.4264	42.70	0.676	461.61
19.816	48.82	0.711	525.36

IV. MAXIMUM POWER POINT TRACKING (MPPT) TECHNIQUE

Solar arrays convert light energy available in atmosphere as a form of photons in sunlight into electricity by implementing photoelectric phenomenon. PV array output depends on certain peculiar factors as affected by intensity and Temperature of sunlight etc. Thus the power output of PV system is non-linear and depends on mentioned above factors. To avoid these natural problems maximum power point tracking techniques are used to make utilization of complete PV modules. This paper uses incremental conductance method to extract the maximum available power from the PV array to increase efficiency of panel and thus three phase synchronous BLDC motor can operate efficiently.

A. Incremental Conductance Method

A simple MPPT algorithm is proposed in this paper called incremental conductance method. This method calculates the maximum power output and thus controls power extracted directly from the Panel. This algorithm method was developed in 1993 and intended to replace certain drawback of some other MPPT techniques to be mentioned as Perturb and Observe method. The maximum power point in the this method is determined by using a relationship between -I/V and dI/dV like if dP/dV is negative value then MPPT is lies at right side of nearest position and if it is positive the MPPT presents at left side.

The equation is given by:

$$\frac{dP}{dV} = \frac{d(V\,I)}{dV} = I\frac{dV}{dV} + V\frac{dI}{dV}$$

$$= I + V\frac{dI}{dV}$$

MPP is reached when dP/dV=0 and

$$\frac{dI}{dV} = -\frac{I}{V}$$

$\frac{dP}{dV} > 0$ then Vp<Vmpp

$\frac{dP}{dV} = 0$ then Vp=Vmpp

$\frac{dP}{dV} < 0$ then Vp>Vmpp

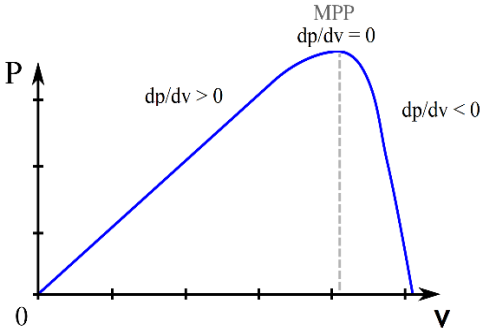

Figure.7 PV graph.

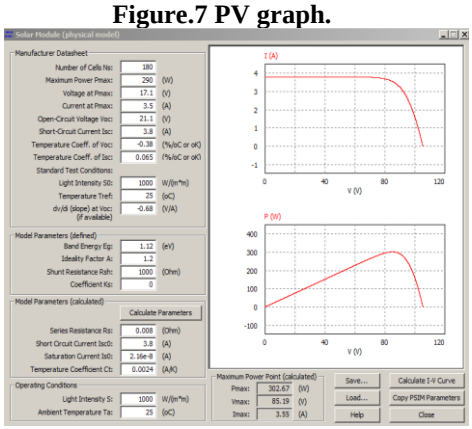

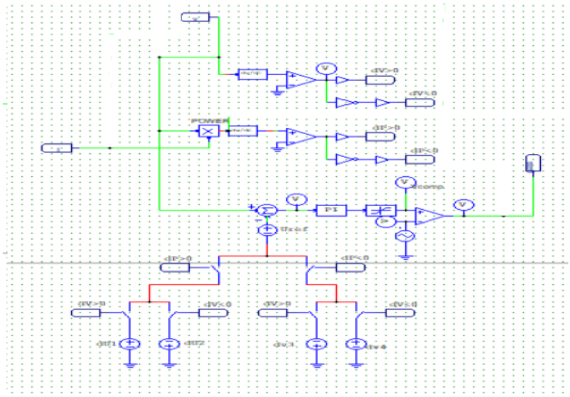

Figure 8: MPPT module simulation.

B. Flow Chart

Incremental conductance method of power extraction is widely implemented method to attain maximum power track from a PV arrays. It measures the current and voltage from panel, and then compares the voltage with present instants with the preceding instants (dV) and even the same with current.

Published By:
Blue Eyes Intelligence Engineering
& Sciences Publication

Then it checks weather the voltage change is zero or not, if it is zero, then again it checks weather current change is zero or not, if it is zero, the condition is considered as a maximum power point, there after it is not required to change the pulse modulation. It is automatically keep on updating the voltage and current. If current change is more than zero, duty cycle is decreased and if not duty cycle for the instant increase. Similarly, the voltage change is non-zero, it will checks for dI/dV, as its value is negative or not. If it calculates a negative value then no change, as it represents the maximum power point is reached & if not satisfied the condition again checks for the dI/dV greater than mean value of current by voltage (ie conductance). If it is satisfied the condition then the duty ratio is increased otherwise it is decreased. In this manner the Incremental conductance method works for maximum power point tracking.

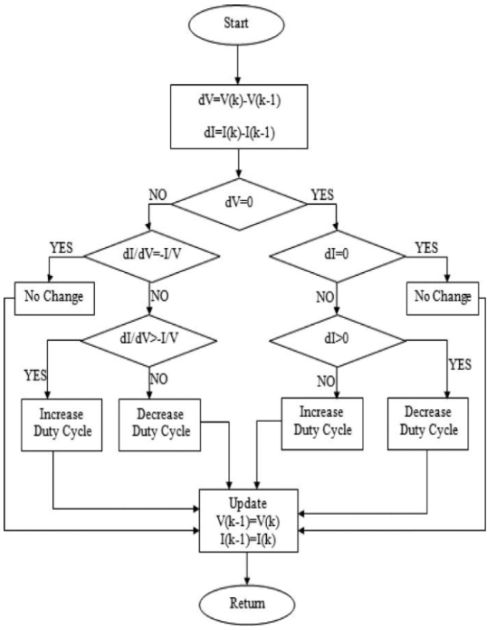

Figure 9: Flow chart of incremental conductance method

V. SIMUALTION & RESULTS

A. Without MPPT

Now, the output terminal of the ćuk converter is connected to voltage source inverter and it is in turn connected to the BLDC motor.

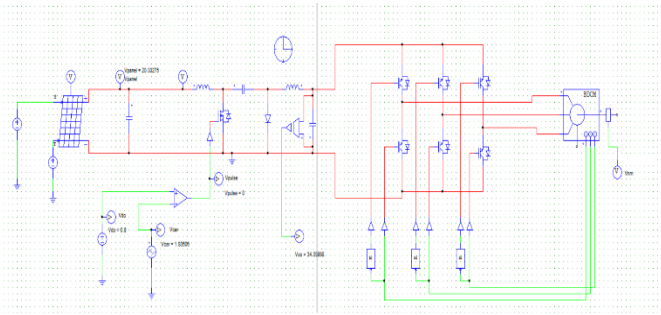

Figure 3 : solar PV array fed BLDC motor through ćuk converter circuit

The speed of the motor is measured for different duty ratios with respect to time.

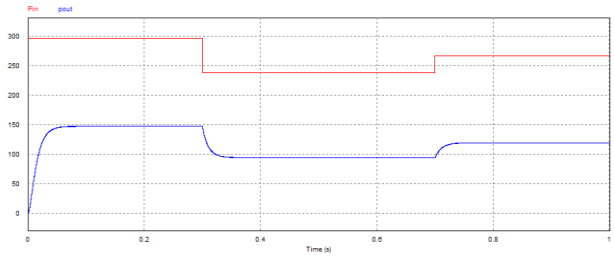

Figure 11: power input and power output when without mppt module

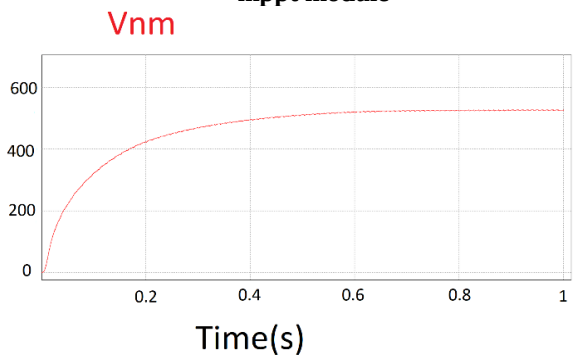

Figure 12 : speed vs time graph with duty ratio D = 0.711

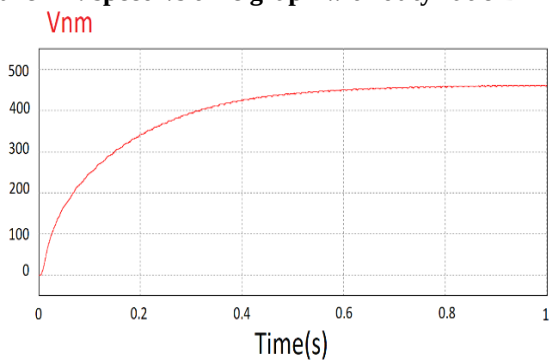

Figure 13 : speed vs time graph with duty ratio D = 0.676

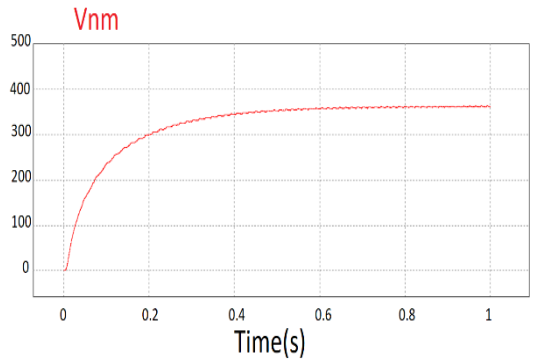

Figure 14: speed vs time graph with duty ratio D = 0.617

The above graph shows that the speed of the BLDC motor remains constant over the time (T). The speed of the BLDC motor is varied according to the duty ratio from Table 1 ,the speed of the BLDC motor increases with increase in duty ratio.

B. With MPPT

When mppt module is used in the simulation then it is going to draw maximum power every time.

Published By:
Blue Eyes Intelligence Engineering
& Sciences Publication

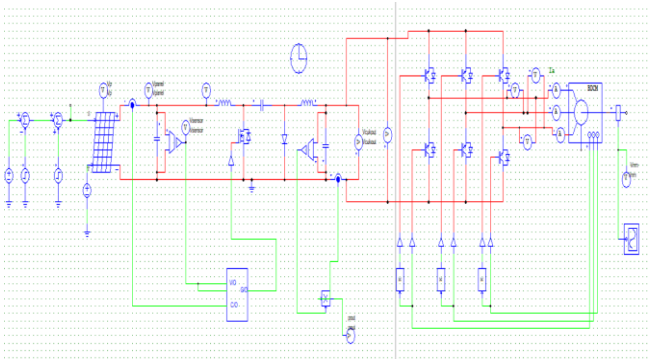

Figure 4: solar PV array fed BLDC motor through ćuk converter with mppt circuit

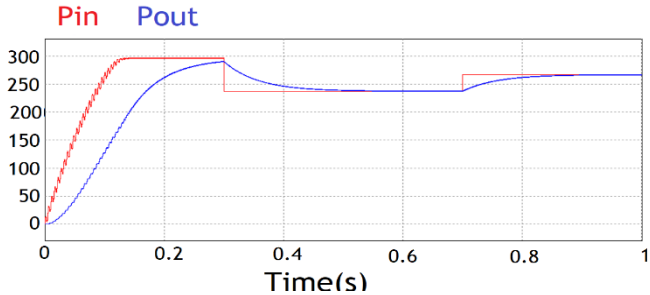

Figure 5: power input and power output when with mppt module

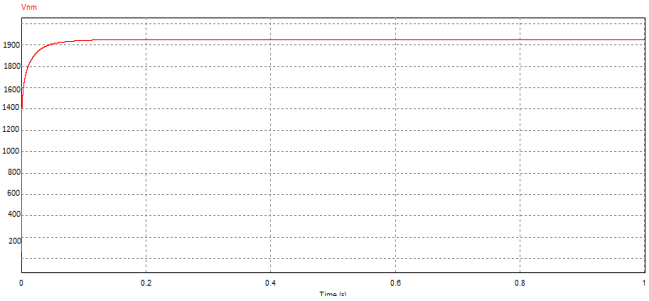

Figure 6 : Speed vs time graph with MPPT

Here with the help of mppt module it can extract maximum power every time ie, pin of a solar PV array is almost equal to pout, hence maximum power is extracted every time.

VI. CONCLUSION

Since the present scenario, the energy demand keep on increasing due to increase in population. In this project , it can be concluded that the usage of renewable energy resource meets the energy demand and the difficulties of solar power generation are overcome. The solar power can be easily utilizes for all the purpose further. Solar output voltage can be controlled by using DC -DC Ćuk converter. And we can get the maximum possible voltage from solar PV array at any intensity by using MPPT technique which will leads to increase in the efficiency of the BLDC motor, From the simulation result, the output of the cuk converter is maintained constant and hence the speed of BLDC motor. This circuit can also be used for variable control of BLDC motor by varying duty ratio of converter switch.

REFERENCES

1. Daniel w. hart ,Tata McGraw-Hill Education(2011)"POWER ELECTRONICS", INDIA.
2. Vinayaka K U, Priya S (2016) "Analysis of BLDC motor performance using space vector pulse width modulation"https://ieeexplore.ieee.org/document/7557292
3. Suryanarayana Doolla.(2014)EN 206: "Power Electronics and Machines Boost, Buck- Boost, Cuk Converters". Department of Energy Science and Engineering. Indian Institute of Technology Bombay.http://www.ese.iitb.ac.in/
4. J. Matthew roney,(2013) "World solar photovoltaics production"http://www.earth-policy.org/indicators/C47/solar_power_2013
5. C. L. Xia,(2012) "permanent magnet brushes DC motor drives and controls",china,Beijing:wiley, http://s1.nonlinear.ir/epublish/book/Permanent_Magnet_Brushless_DC_Motor_Drives_and_Controls_1118188330.pdf
6. Amit Dodke, R.G.Shriwastava, K.N.Sawalkhe,(2015) "Design and control of CUK converter FED Brushless DC Motor Drive" Journal of Network Communications and Emerging Technologies (JNCET) www.jncet.org
7. Rajiv Roshan, Yatendra Yadav, Umashankar S, Vijayakumar D(2016) "Modeling and Simulation of Incremental Conductance MPPT Algorithm Based Solar Photo Voltaic System using CUK Converter" https://ieeexplore.ieee.org/document/6533450/
8. Azadeh Safari and Saad Mekhilef,(2011) "Simulation and Hardware Implementation of Incremental Conductance MPPT With Direct Control Method Using Cuk Converter" https://ieeexplore.ieee.org/document/5456214/
9. James Dunia, Bakari M. M, Mwinyiwiwa Alex L, Kyaruzi(2014) "ĆUK Converter Based Maximum Power Point Tracking for Photovoltaic System Using Incremental Conductance Technique" http://www.ijirae.com/volumes/vol1/issue11/02.NVEE10089.pdf
10. Dr.L.V.Narasimha Rao, Ramesh.Vaddi (2014) "Simulation Cuk Converter Using Incremental Conductance MPPT with Direct Control Method"
11. Reshma M S, Midhun Basil Alias, Haritha S Nair, Priya Jose "Cuk Converter Fed Electric Vehicles"
12. Rajan Kumar and Bhim Singh , Volume 11, Issue 2, February 2017, "Solar PV powered BLDC motor drive for water pumping using Cuk converter" http://digital-library.theiet.org/content/journals/10.1049/iet-epa.2016.0328

Published By:
Blue Eyes Intelligence Engineering
& Sciences Publication