Design of an Arduino based converter for Solar Energy

R. Abinaya, E. Juhi Gladies

Abstract*: This paper shows the structuring and displaying of SEPIC (Single Ended Primary Inductance Converter) DC-DC converter for photovoltaic applications. A sun based board yield will differ as for sun oriented radiation and this radiation is less which does not meet the prerequisites of the heap. So we proposed SEPIC converter which goes about as a stage up or venture down transformer to help the voltage dependent on sun powered radiation level and it likewise goes about as an impedance matcher and controller between the source and the heap since the yield from the sun based board is unregulated. The confinements, for example, reversed yield voltage, high electric weight on converter components and throbbing info flow are settled by the proposed converter.An gradual Conductance(IC) calculation is utilized for better Maximum Power Point Tracking (MPPT) in the proposed framework. Sinusoidal Pulse Width Modulation(SPWM) kind of inverter module is utilized to change over DC voltage into AC voltage for AC stack applications. The viability of the proposed framework is exhibited in reproduction utilizing MATLAB/SIMULINK condition .The down to earth framework was tried upto 15V sun based board, 12V lead corrosive battery,24V sepic converter module and 230V inverter.

1. INTRODUCTION

This paper demonstrates the organizing and showing of SEPIC (Single Ended Primary Inductance Converter) DC-DC converter for photovoltaic applications. A sun based board yield will contrast concerning sun arranged radiation and this radiation is less which does not meet the requirements of the pile. So we proposed SEPIC converter which goes about as a phase up or adventure down transformer to help the voltage reliant on sun fueled radiation level and it similarly goes about as an impedance matcher and controller between the source and the pile since the yield from the sun based board is unregulated. The restrictions, for instance, turned around yield voltage, high electric load on converter parts and throbbing information stream are settled by the proposed converter .An steady Conductance(IC) figuring is used for better Maximum Power Point Tracking (MPPT) in the proposed structure. Sinusoidal Pulse Width Modulation(SPWM) sort of inverter module is used to change over DC voltage into AC voltage for AC stack applications. The practicality of the proposed structure is displayed in generation using MATLAB/SIMULINK condition .The sensible system was attempted upto 15V sun based board, 12V lead destructive battery,24V sepic converter module and 230V inverter.

Revised Manuscript Received on April 05,2019.

R. Abinaya, Assistant Professor, Electronics and communication engineering, M.Kumarasamy College of Engineering, Karur, Tamil Nadu, India.(E-Mail: abinayar.ece@mkce.ac.in@gmail.com)

E. Juhi Gladies, Assistant Professor, Electronics and communication engineering, M.Kumarasamy College of Engineering, Karur, Tamil Nadu, India.(E-Mail: juhigladiese.ece@mkce.ac.in@gmail.com)

2. LITERATURE REVIEW

Among the non-traditional or Renewable Energy Sources (RES), sun based vitality is an imperative wellspring of vitality. Sun based methods are portrayed asactive and detached. Dynamic systems incorporate PV and sun based warm authorities and the detached procedures incorporate sun based rooftop top building. Because of the points of interest like nonattendance of fuel cost, less upkeep and contamination free vitality creation this framework is increasing more significance than different frameworks [1]. Different strategies for effective extraction of the most extreme yield control from a sun based board under shifting meteorological conditions have been considered. Among these instruments, the Maximum Power Point Tracking is most reliable and it is most appropriate for PV framework. The utilization of DC-DC converter in the middle of the framework and PV module can give productivity streamlining [2]. The primary distinction between the P&O strategy and other method is thatthe yield intensity of PV exhibit is utilized specifically for the control of dc/dc converter in this way diminishing the unpredictability of the framework. The subsequent framework has high proficiency, minimal effort and can be effectively modified[3].Even however the utilization of sensors/controllers with each module does not appear to be a noteworthy issue today considering the numerous applications including broad diagnostics of the PV modules, yet there is unquestionably an extension for further enhancement of their numbers. In any case, this may not be an issue for littler framework, but rather this might be an issue for substantial frameworks, where assistant power support might be required [4,5].The converters, for example, buck, help, buck-help, cuk converters are being utilized in MPPT frameworks. PWM inverters are utilized for matrix interconnection and independent AC loads. The determination of converter relies upon the heap associated with the framework. The swells in dc voltage and current likewise impact the determination of converters. With the previously mentioned converters and MPPT calculations, sunlight based boards can be arranged to encourage any sort of load [6].

The previously mentioned converters can likewise create ventured up or ventured down the sun powered voltage, yet the yield voltage extremity is inversed concerning input. Additionally, those converters will deliver swell current.

EXISTING SYSTEM

The block diagram and circuit diagram of the existing system is shown in fig.1.1.

Published By:
Blue Eyes Intelligence Engineering
& Sciences Publication

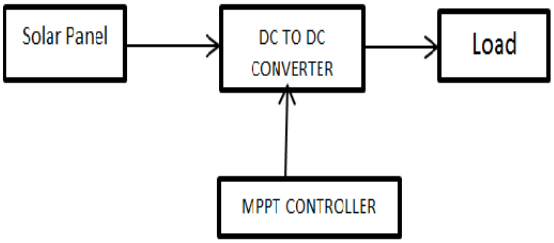

The voltage from the solar panel is stepped up by the buck-boost converter and the resultant voltage from the converter is given to the load.The MPPT technique used to track the maximum power from this system is P & O technique.

III. PROPOSED METHODOLOGY

A. Block Diagram of the Proposed System:

The proposed framework utilizes SEPIC converter rather than buck-help converter for better voltage profile. The yield produced by the sun based board is given to the battery for capacity reason. The voltage from the battery is given to the sepic converter which either ventures up or ventures down the voltage of sun powered board for the necessity of load. The effectiveness of intensity exchange from the sun based board is affected bythe measure of daylight falling on the sunlight based boards and the electrical attributes of the heap.

The yield from the sepic converter is given to theSinusoidal Pulse Width Modulation inverter which is utilized to change over dc voltage from the sepic converter to the air conditioner voltage to drive an air conditioner stack. In the proposed framework Incremental conductance method is utilized for

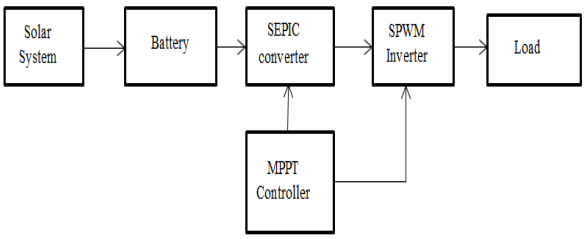

Fig.2 Frequency Bands of EEG signal

MPPT following. This MPPT controller is utilized to follow the most extreme current and voltage of the converter. This framework is favored than existing framework since it diminish swell current and will create non-reversed yield voltage.

B. Sepic Converter

The SEPIC converter configuration works in the consistent conduction mode that implies the current throughthe inductor L1 and inductor L2 never achieves zero. The yield voltage might be lower or higher thanthe input voltage. In this circuit the capacitor C1 disengages the contribution from yield and gives theprotection against the short out. Among all dc-dc converters, SEPIC converter is utilized in consistent current conduction (CCM) mode. In this, the PWM exchanging is done at the recurrence of 50 kHz, where reference current got from MPPT calculation is contrasted and inductor current. At that point the blunder flag is treated as control flag which is looked at by redundant waveform and the exchanging beat is gotten.

C. Incremental Conductance

A MPPT framework comprises of a voltage divider circuit and Hall-impact current sensor as a current and voltage sensors, a DC– DC converter and a MPPT calculation. A crucial element of Incremental Conductance calculation is its high following exactness under sudden changes in sunlight based irradiance. In this calculation, the current and voltage of the PV module are estimated. Gradual conductance and prompt conductance are arranged. Other than this a few examinations are made so as to decide the course of obligation proportion of the switch door flag. The numerical articulation of this calculation is subordinate of intensity regarding voltage.

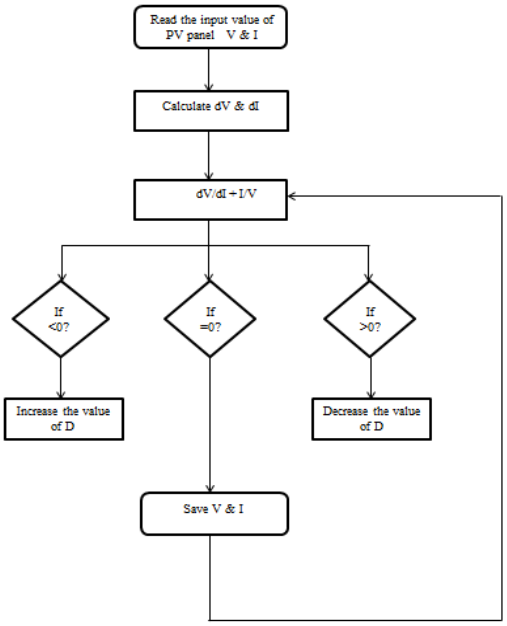

Fig.2 Frequency Bands of EEG signal

IV. RESULT AND DISCUSSION

The practical system was verified upto 15V solar panel, 12V lead acid battery, and 24V sepic converter module and 230V inverter.

The fig 5 shows the MATLAB/SIMULINK diagram for design of SEPIC converter for PV charger. SEPIC converter is used to get the constant output voltage (24V) for the variable input voltage from the PV module. Input inductor (L1) is used to allow the peak- to-peak ripple current. Here the IGBT is act as a switch. Inductor (L2) is used to reduce the ripple. Output diode (D1) is used to handle the peak current and the reverse voltage. When the switch S1 is turned on, the inductor (L1) is charging and the output current is supplied by the capacitor (C3). The reference voltage and the output voltage are given to Arduino controller. Arduino controller is used to control the output voltage as constant 24V.

Published By:
Blue Eyes Intelligence Engineering
& Sciences Publication

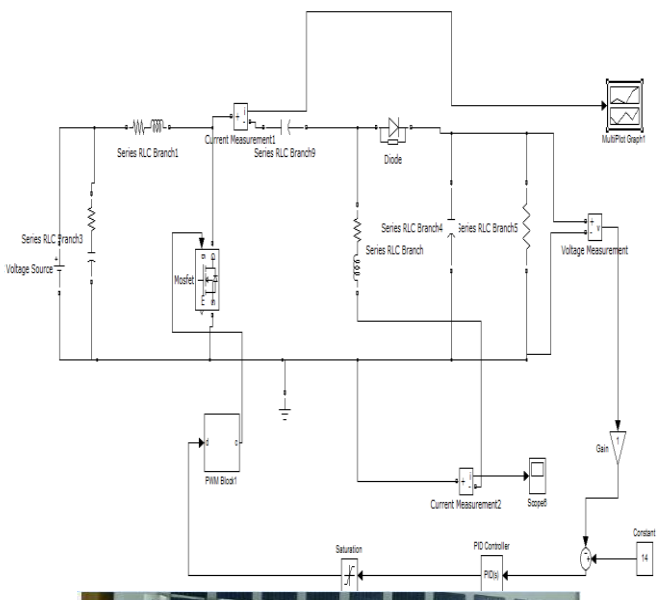

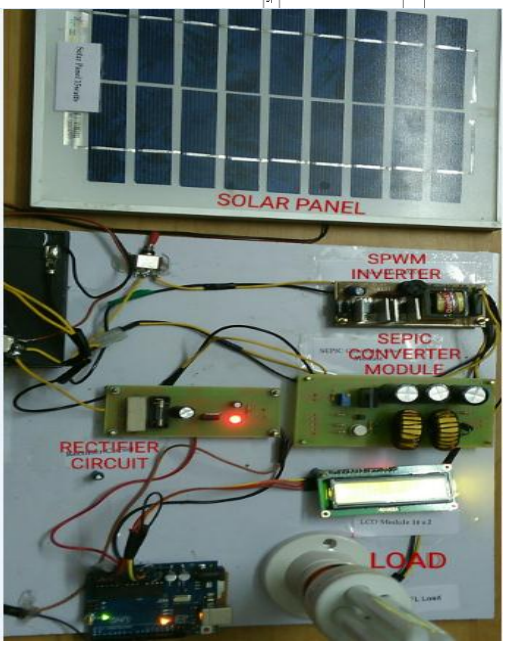

V. CONCLUSION

Both the product and equipment divide has effectively finished and the adequacy of the proposed converter has been effectively reenacted in the Matlab/Simulink. From the acquiredresults, it isevident that, the proposed converter is fit for delivering the swell free non-inverter yield with the satisfactory productivity. This converter is intended to help the voltage from 15V to 24V with the productivity of 89.52.

REFERENCES

1. U.Jagadeesh, K.Lokesh Achari "A Buck-Boost Based Dc/Ac Converter For Residential pv Applications By Using MPPT" Volume-2, Issue-11, Nov.-2014.
2. S.Palanivel Rajan, "A Significant and Vital Glance on "Stress and Fitness Monitoring Embedded on a Modern Telematics Platform", Telemedicine and e-Health Journal, ISSN: 1530- 5627 (Online ISSN: 1556-3669), Vol. No.: 20, Issue No.: 8, pages: 757-758, 2014
3. Sannasy Mageshwari, S. Kanagalakshmi and Hannumath Rao "Design and Implementation of Buck-Boost Converter for Residential PV Application", Vol. 3, Issue 12, December 2015.
4. C.Vivek, S.Palanivel Rajan, "Z-TCAM : An Efficient Memory Architecture Based TCAM", Asian Journal of Information Technology, ISSN No.: 1682-3915, Vol. No.: 15, Issue : 3, pp. 448-454, 2016.
5. Noori Bawi Dawood"Review of Different DC to DC Converters Based for Renewable Energy Applications", IRJET. Volume: 03 Issue: 03 | Mar-2016.
6. Pratapsinh G. Parmar, Urvashi D. Patel "A Review on DC-DC converters for Photovoltaic system IJIREEICE December 2015.
7. S.Palanivel Rajan, C.Vivek, "Analysis and design of microstrip patch antenna for radar communication", Journal of Electrical Engineering & Technology, Online ISSN No.: 2093-7423, Print ISSN No.: 1975-0102, Volume 14, Issue 2, pp 923–929, DOI : https://doi.org/10.1007/s42835-018-00072-y, 2019
8. Nor Hanisah Baharudin, Tunku Muhammad Nizar Tunku Mansur, Fairuz Abdul Hamid3, Rosnazri Ali, Muhammad Irwanto Misrun "Topologies of DC-DC Converter in Solar PV Applications" November 2017, ijeecs. Vol. 8, No. 2, November 2017.
9. S.Palanivel Rajan, T.Dinesh, "Statistical Investigation of EEG Based Abnormal Fatigue Detection Using LabVIEW", International Journal of Applied Engineering Research, ISSN: 0973-4562, Vol. 10, Issue 43, pp.30426-30431, (Impact Factor – 0.127), 2015.
10. J. Dawidziuk "Review and comparison of high efficiency high power boost DC/DC converters for photovoltaic applications", TECHNICAL SCIENCESVol. 59, 2011.
11. S.Palanivel Rajan, et.al., "Experimental Explorations on EOG Signal Processing for Real Time Applications in LabVIEW", IEEE Digital Library Xplore, ISBN : 978-1-4673-2047-4, IEEE Catalog Number: CFP1221T-CDR, 2012.
12. Urmimala Chatterjee, Johan Driese, "Intra-Module Dc-Dc Converter: Topology Selection and Analysis" ESAT-ELECTA, 2011.
13. Annop Nakpina, Sudarat Khwan-ona"A Novel High Step-Up DC-DC Converter for Photovoltaic Applications" iEECON2016.
14. Hrishikesh Krishna Kumar, Sruthy Sajith,Subha Jacob, Ramya K "Three-level DC-DC Converter with GSS based MPPT for PV Applications" ISSN (IOSR-JEEE),2013.
15. S.Vijayprasath, S.Palanivel Rajan, "Performance Investigation of an Implicit Instrumentation Tool for Deadened Patients Using Common Eye Developments as a Paradigm", International Journal of Applied Engineering Research, ISSN No.: 0973-4562, Vol. 10, Issue No.1, pp. 925-929, 2015

Published By:
Blue Eyes Intelligence Engineering
& Sciences Publication