Pso And Fpo Based Optimization In Tuning Mpc Of Wsn Model For Maximum Energy Harvesting

S.Thiyagarajan, P.Gowthaman, M.Venkatachalam, M.Saroja

ABSTRACT:The reduction of the energy consumption compensated by harvesting RF energy of a WSN using techniques realized to practical extent, considering numerous forced limitations. In scheming energy harvesting regulation, techniques were suggested on control methods. The techniques reserved must promise in such a way the limitations forced by the utility with regard to quantity of acquired data are attained, whereas the lifetime of the network is prolonged, in contrast to present and simple arraying. In several such arraying, the controller for supervising, managing acquires more unnecessary estimations, or estimations that are intensely mutual from the nodes. Hence, control techniques have to be schemed for efficient energy harvest considering the utility demands through volume of estimations from data. Amidst several control techniques, model predictive control (MPC) is a part of important controlling methods. It has several effective uses. This paper contrasts MPC method for automated tuning with particle swarm optimization (PSO) and flower pollination optimization (FPO). The major confrontation of MPC is in tuning of control factors for several WSN targets, and PSO or FPO application for automated tuning may become member of solutions. MPC tuning issue is an optimization challenge. Optimization methods like PSO or FPO can be utilized. PSO and FPO are meta-exploratory approaches that are familiar to explore a global optimal solution rather at a higher proportion and without using ascent. The computational results for energy harvest of WSN reveal the influence of the suggested PSO and FPO dependent tuning.

Keywords: **wireless sensor networks, model predictive control, feedback tuning, energy harvesting, particle swarm optimization, flower pollination optimization**

I.INTRODUCTION

The technology of WSN is appearing as a tenable solution to numerous novel uses because of an intensive investigation that happened over decades in past. Wireless sensor network is a particular wireless network that links sensor nodes and communicate data about the region to a centralized cache.

Revised Manuscript Received on March 25, 2019.

S.Thiyagarajan,Department of Electronics Science, Jaya College Of Arts and Science, Chennai

P.Gowthaman, Department of Electronics, Erode Arts and Science College, Erode

M.Venkatachalam ,Department of Electronics Science, Jaya College Of Arts and Science, Chennai

M.Saroja,Department of Electronics, Erode Arts and Science College, Erode

Such nodes possess the capabilitDepartment of Electronics Science, Jaya College Of Arts and Science, Chennai (Tamil Nadu), India.ies of detecting, handling, and communicating Department of Electronics, Erode Arts and Science College, Erode(Tamil Nadu), India data. The important operations of WSN are collections and distributions of dataDepartment of Electronics Science, Jaya College Of Arts and Science, Chennai (Tamil Nadu), India. from intended region that describe the physical events such as humidity, temperature, illumination, etc. [1]. Data acquired by sensors of every node can be utilized for local processing or consigned to a gateway over network through several jumps. Fig 1 depicts classical network structure. The hardware platform for WSN is fundamentally a low power embedded systems using certain sensors integration and analog input/output channels to couple sensors.

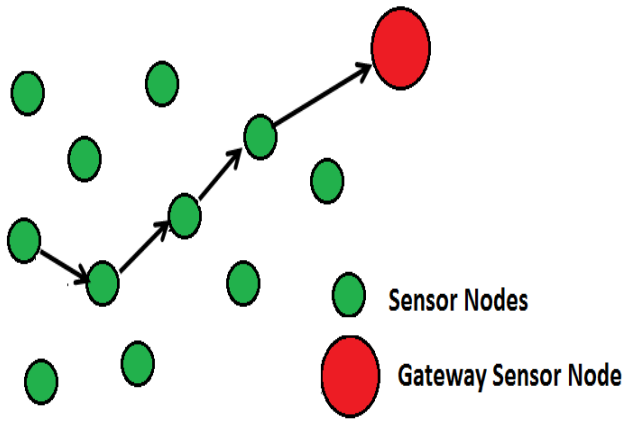

Fig 1 The Architecture of typical WSN

Nodes are positioned fixed or unfixed. WSN differs largely in its features – it may be homogeneous or heterogeneous with regard to its detecting ability, it can perceive its position, it can operate by harvesting energy or rely on batteries, it can perform computation either quite basic or complex, and it can live long or throwaway. [2] This paper is specifically inspired to construct *smart* sensor nodes, that is, nodes that have significant on board computing capability must have renewable energy resources.

Power Consumption

By sensing block: The power utilized for sensing is employed during sampling, which involves the data access time and the awake and steady period time to sensor.

The rest times, the sensors are totally inactive and do not use Department of Electronics, Erode Arts and Science College, Erode(Tamil Nadu), India power. The utilization of power by ADC is normally directly related to the sample size captured. The

sensing will be designed to consume minimum energy by using passive sensors and low rate ADC. But, the power utilization during sensing will dramatically elevate because of the communication block when high rate ADC with energy greedy sensors is utilized for any specific use [5]. Low energy ADCs [6] and low-energy sensors [7] for the several uses are chiefly applied.

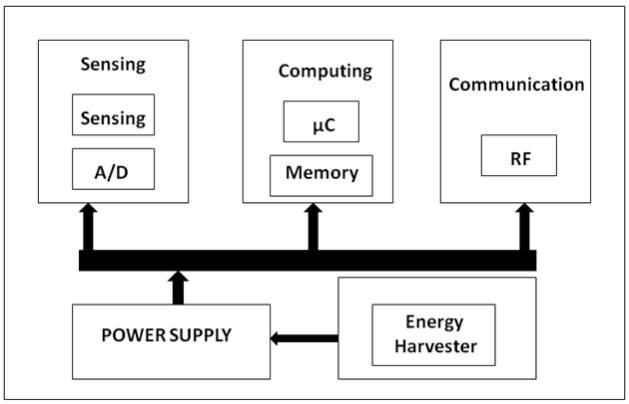

Fig 2 Typical Energy Harvesting WSN Architecture

By Computing block: The diverse specifications of the processor persuade the complete power utilization of nodes and hence too their lifespan. Thus the design of a low power circuit is critical. Present microprocessors, namely MSP430 family or At MEGA family microcontrollers, provide remarkable energy performance through inactive conditions to reduce the power utilization [8, 9]. The impacts of clock frequency and supply voltage and deployment of the program in the computing unit memory were examined in diverse researches [10].

By communicating block: The communication processes like transmission, reception and heeding controls the energy budget. The utilization of energy during communication intensely relies on its protocols applied at several network layers. It largely impacts the node longevity. The utilization of power by it is assessed through parameters namely supply voltage, transmission and reception currents, current at sleep state etc. Several efforts are made to minimize the utilization of power during communication.

By power block: Utilizing accumulated or harvested energy from environment of the batteries is the two choices for power supply. The energy reservoir is attained by using batteries or alternate contrivances namely downsized heat engines or fuel cells, while for energy foraging chances [11] are contributed with RF, PV, acoustics and vibrations. Understanding the particular features of each battery through voltage, load current, charge and discharge rates and energy density is the start in choosing a battery for the nodes [12]. The studies [13, 14] provide an outline of the features, potentials and infirmities of the several battery varieties.

II. ENERGY OPTIMIZATION USING MODEL PREDICTIVE CONTROL WITH PSO AND FPO TUNING

The node longevity is possibly the essential measure in evaluating the WSN operation [15]. Actually, in a restricted ambience, certain specific resource must be considered. The network longevity, associated to the energy utilization, becomes the principal feature for assessing sensor for particular application.

This paper focuses in suggesting a new control technique to reduce the energy utilization on the basis of Model Predictive Control (MPC) with heuristic optimization methods. This option is because of following motivations:

1) The energy utilization model for the group of nodes
2) The global target is to reduce the utilization of energy by the group of nodes and to promise an assigned function
3) The group of limitations that have to be realized.

Currently, MPC method was applied as a common approach for obtaining steadying controllers in limited systems [16]. However, the presence of speedier computing processors and advancements in predictive controllers computing efficiency has expanded its utility scope to comprise speedy sampling procedures [17].

MPC Fundamentals

The theoretical form of MPC is shown in Fig 3. The MPC concept employs a definite system model to be directed in predicting subsequent output performance. This predicting ability permits finding optimum control issues, in which the error while tracking, such as the discrepancy between desirable reference and predicted output, is reduced on subsequent horizon, probably depend on limitations on altered inputs and outputs. The optimization outcome is used based on recession horizon principle: during *k*th time the initial input of the optimum control sequel is indeed exerted to the system. The leftover optimum inputs are dropped, and a fresh optimum control issue is resolved during $k + 1$ th time. This concept is demonstrated in Fig 4. Being fresh valuations are gathered from the system during *k*th time, the recession horizon procedure contributes the controller with aimed feedback features. The MPC method comprises fundamental elements in realization of prediction, optimization and recession horizon [18].

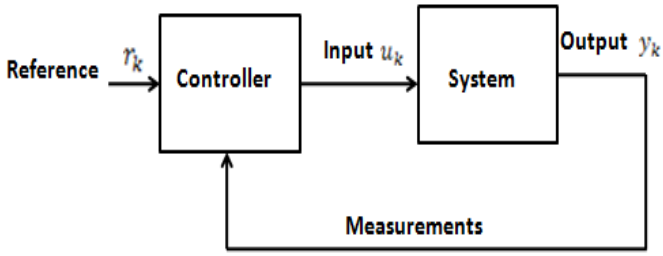

Fig 3 Structure of MPC

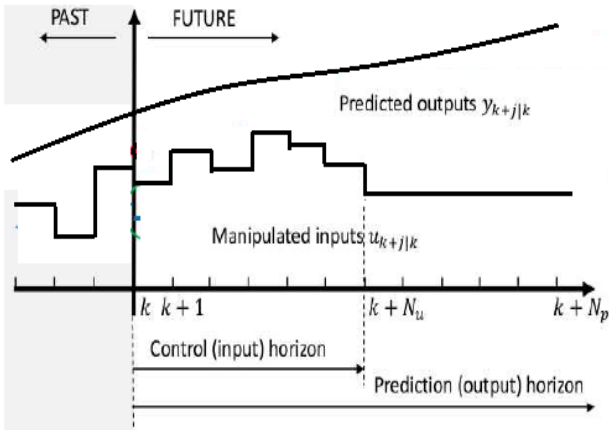

Fig 4 Performance of MPC

The dynamic model is used for control system in predicting future outputs. The linear system of discrete rime with state space description is considered

$$x_{k+1} = w_x x_k + w_u u_{k+1} \quad (1)$$

Where x_k, u_k indicate the vectors for states and controls at the instance of kth sampling, appropriately. The vector for output is $y_k = x_k$. For stated predicted input sequence, the identical sequence in predicting states is produced through model simulation advance over the prediction horizon, i.e. P_y for the output prediction and P_u for the input prediction sampling intervals. Such sequences that predicted are frequently conveniently grouped vectors **x**, **u** describe as follows

$$\mathbf{x}=\begin{pmatrix} x_{k+1\vee k} \\ x_{k+2\vee k} \\ \cdot \\ \cdot \\ x_{k+P_y\vee k} \end{pmatrix} \text{ and } \mathbf{u}=\begin{pmatrix} u_{k\vee k} \\ u_{k+1\vee k} \\ \cdot \\ \cdot \\ u_{k+P_u-1\vee k} \end{pmatrix} \quad (2)$$

$x_{k+i\vee k}$ and $u_{k+i\vee k}$ indicate the vectors for the states and inputs at $k + i$th time which are speculated at kth time. From Fig 4, P_y indicates the length of horizon of predictions or outputs, and P_u denotes the length of horizon of controls or inputs with $P_y \leq P_u$. It is referred as a problem of finite horizon for the finiteness of P_y. $x_{k+i\vee k}$ evolves according to the prediction model:

$$x_{k+i+1\vee k} = w_x x_{k+i\vee k} + w_u u_{k+i\vee k};\ i = 0,1\ldots. \quad (3)$$

with the initial condition defined by $x_{k\vee k} = x_k$ (which is here supposed to be measured).

Predictive control feedback

The law of feedback of predictive control is evaluated through decreasing an operation cost. It is described through prediction sequences **u, x**. Typically C_k is selected as cost in quadratic:

$$C_k = \sum_{i=0}^{P_y} x_{k+i\vee k}{}^T W_x x_{k+i\vee k} + \sum_{i=0}^{P_u-1} u_{k+i\vee k}{}^T W_u u_{k+i\vee k} \quad (4)$$

Where $W_x \in R^{n\times n}$ and $W_u \in R^{mn\times mn}$ are matrices of semi and positive definite symmetry appropriately. $u_{k+i\vee k} = u_{k+P_u-i\vee k}$, where $j = P_u \ldots\ldots P_y - 1$ is considered. Obviously, C_k is dependent on **u**, and the optimum sequence of input for the challenge in decreasing C_k to the least is described as $\mathbf{u}^*$

$$u = \underset{u}{argmin} C_k \quad (5)$$

When the system is contingent on limitations of the controls and states, subsequently they are usually considered for the problem of optimization.

Just the element of first in predicted optimum input sequence u is exerted to the system as mentioned previously:

$$u_k = u_{k\vee k} \quad (6)$$

The prediction **x** of states and thus the control sequence u of optimum rely on present state x_k. This method establishes as feedback law for MPC, hence contributing the robustness in errors and incertitude while modeling.. A recession horizon method may promise that the closed loop system performance is noticeably in predicting optimum when the cost and limitations are suitably schemed [19].

III.MPC MODEL FOR WSN

The aim of this paper is to reduce into least the energy utilization by the nodes when assuring that a predefined assistance provided by such nodes is satisfied. As a result, regard a wireless sensor network that comprises n∈N nodes S_j, $j = 1\ldots. n$, every sensor node is energized by the battery. Only one battery is considered here, yet usually, the node may contain many batteries. Also, the nodes are furnished with harvesting mechanisms. Entire nodes are operatively identical: they are transposable yet their component materials may vary, such as processors (controllers), batteries may be dissimilar. The communication performed in a cluster may involve multiple hops or a single hop. Additionally, every node will dispatch data to supervisor via a gateway. The nodes show several operating modes M_h, $h = 1\ldots\ldots m$, $m \in$ N, and it is associated to several states such as on, off, sleep etc. of every node, featured by comprehended energy utilization for a specified time period. Normally, the operating modes will be active, inactive and standby. Observing such modes is divided into sub-modes on the basis of their related energy utilization. As an example, the active mode is divided into ready, observe, monitor, transition, and standby mode into deep sleep, sleep. The supervisor selects the operating mode of every node based on an energy control.

So to manage energy reduction in WSN, the node leftover energy is modeled using discrete time state space model of Linear Time Invariant (LTI)

$$x_{k+1} = w_x x_k + w_u u_k + w_v v_k \quad (7)$$

In which $x_k \in R^n > 0$ is the leftover energy in the node batteries at every k the sampling instants. The matrix that describes the state is $w_x = I_n R^{m\times n}$. $w_u u_k$ depicts the energy utilized within the time period $[kT_c, (k+1)T_c]$. T_c is control

interval. $w_v v_k$ is the increased energy because of harvesting.

Usually T_c is considered as a variable, based upon the node and ambient settings. Thereby, it will be altered because of the episodes happen in the system, as an example the node extinction that is presumed to operate in active mode during $kT_c < T_f < (k+1)T_c$ time. Hence, the law in controlling must run until originally designated control time T_c is advanced to assure the operation of WSN which suppose to contribute is achieved.

The original battery ability, at k = 0 th instant, is indicated as x_0. Also, the leftover energy for every S_j node is limited as

$$0 < X_j^{min} \leq x_j \leq X_j^{max} \qquad (8)$$

where $X_j^{min} = \beta_j X_j^{max}$ is the least energy strength prevailing in battery of every S_j node. The constant β_j value is furnished by the manufacturer of the battery to prevent havocs. X_j^{max} is the rated energy capability, presumed invariable. Perhaps the node is connected to primary supply, it does not have battery and its energy is boundless. But, it can yet show diverse operational modes based on their utilization of energy. The leftover energy in the battery of node is presumed to be liberated by every node at k th sampling instants, So

$$y_k = x_k \qquad (9)$$

$u_k = \begin{bmatrix} u_1^T \\ . \\ u_j^T \\ . \\ u_n^T \end{bmatrix} \in \{0,1\}^{mn}$ is the input for control.

Every sub vector $u_j = \begin{bmatrix} u_{j1} \\ . \\ u_{jh} \\ . \\ u_{jm} \end{bmatrix}$ is associated to operational mode of node Sj, in which $u_{jh} \in \{0,1\}^{mn}$. Being every S_j node operates in distinct operational mode at every instance of time, a group of constraints then described as

$$\forall j = 1, \ldots, n: \sum_{h=1}^{m} u_{jh} = 1, u_{jh} \in 0,1 \qquad (10)$$

More constraints on u_k is feasible to apply. As an example, it may be required for particular geographic site that a node is active or dormant forever or at least stated time periods. There may be a need to drive quite precise node to be active over nighttime, or only one accurate sensor to be active over nighttime to render the service that becomes apex in a sensor network the matrix for control is $w_u = diag\left(-w_{u_1}, \ldots \ldots w_{u_n}\right) \in R^{n \times mn}$. Each component $w_{u_{jh}}$ of $w_{u_j} \in R^m$ depicts the energy utilized by S_j operating in a mode M_h (see Table1). The element $w_{u_{jh}}$ may comprise

- Mean value of energy utilization during T_c control period
- The definite quantity of utilized energy, which is assayed and probably refreshed, resulting to produce varying time matrix w_{uk}, by every node on its own or by the supervisor in reality.

The numerical value option of $w_{u_{jh}}$ is based on the use and nodal electronic components. A change of Sj from M_h to M_l mode forced by the supervisor will incur an additional cost in energy which is presumed to amalgamate in $w_{u_{j1}}$.

Sensor Nodes	S_1	….	S_j	…	S_n
Mode M_1	w_{u11}	…	w_{uj1}	…	w_{un1}
	.	.	.	.	.
Mode M_h	w_{u1h}	…	w_{u}jh	…	w_{u}nh
	.	.	.	.	.
Mode M_m	w_{u1m}	…	w_{ujm}	…	w_{unm}
	.	…	.	…	.
	w_{u1}		w_{uj}		w_{un}

Table.1.The utilization of energy by node in diverse operating modes

$v_k = \begin{bmatrix} v_1 \\ . \\ v_j \\ . \\ v_n \end{bmatrix} \in \{0,1\}^n$ is viewed as a input perturbation that is uncontrollable however may be speculated in certain occasions. Fundamentally, v_j describes the capability of S_j in harvesting energy for a time interval $[kT_c, (k+1)T_c]$.0 (respectively 1) is related to the inactive (respectively active) state of the harvest system. Thus $C \in R^{n \times n}$ so called perturbation matrix

$$w_v = diag\left(w_{v_1}, \ldots w_{v_j} \ldots w_{v_n}\right) \qquad (11)$$

Where w_{v_j} corresponds to energy harvested quantity by S_j over the T_c period. The matrix w_v is at core a matrix of time varying in real time settings. Regarding the longevity at kth time of the accessible S_j node is described as

$$L_j = \frac{x_j + w_{v_j} v_j - X_j^{min}}{w_{u_j} u_j} \qquad (12)$$

When there are no changes in nodal mode at kth time. An accessible S_j node will be monitored by the supervisor: this acquired data concerns the leftover energy y_j of S_j at kth instant. The description that presents in (12) is demonstrated in Fig 5.

Published By:
Blue Eyes Intelligence Engineering
& Sciences Publication

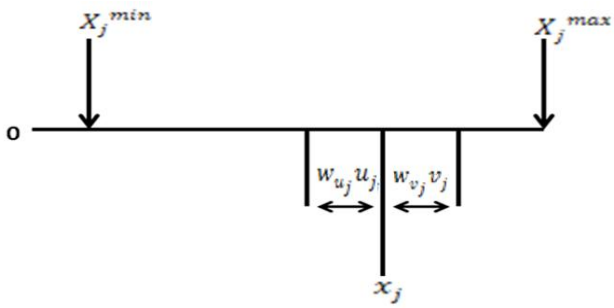

Fig 5 Descriptions associated to the energy in a battery at *t* time, in which X_j^{max} is the maximal battery energy; X_j^{min} is the minimal battery energy; x_j is battery leftover energy; $w_{v_j}v_j$ is the probable harvested energy over $[kT_c,(k+1)T_c]$ time period and $w_{u_j}u_j$ is the energy consumed during $[kT_c,(k+1)T_c]$.

A dynamic control for energy conserving is suggested at usage viewpoint so to augment the WSN longevity whereas attaining a specified operation demanded by the real time requirement framed above WSN. This real time requirement forms benefit of the appraisals contributed by the nodes. This operation is specified for example as a stated minimal number of evaluations that have to be supplied by WSN during specified time interval. Henceforth, this operation is termed mission. The WSN longevity is defined as the period of time up to the point that the mission is attained. Normally, the mission has to be assured, in which every node can overturn its play with other one by not reducing the operation of entire network. So to attain the mission when reducing the utilization of the energy, a subset $d_h \in N$nodes is ascribed to a specified mode M_h. As a result, different group of constraints is described

$$\sum_{j=1}^{n} u_{jh} = d_h \quad (13)$$

Fundamentally, the concept is to decrease the active node number when the evaluations contributed by entire nodes must not entirely obligatory.

The vector $\mathbf{u}_k$ for control assumes its values within $\{0, 1\}^{nm}$ as mentioned above. It sets the operating mode of every node subject to limitations (10). The limitations in (13) are applied to describe the mission. Regard a network contains n nodes that produce intensely correlated evaluations. The energy utilization of entire network may be reduced when the nodes are controlled so to deliver just sufficient data for the real time requirement realized over WSN to operate rightly. Generally, this refers that when the real time requirement demands $n_{act} < n$nodes of active mode that pass their appraisals, $n - n_{act}$ nodes can be made to operate in standby mode that uses lesser energy comparing active mode. In such case, the longevity of WSN is the time length that the method of control can assure $n_{act} = d_1$ nodes to operate in active modeThe reduction of the energy utilization in discrete time model of (7) is attained with MPC method that is strenuously computed through a quadratic programming (QP) problem. MPC is too applied for controlling the systems that include a combination of logics and dynamics of real values. Miserably, if this issue is composed as optimization; it is not anymore a QP problem however becomes a mixed integer (MIQP). This finally includes variables of optimization that are real, however too integer or possibly binary values, which build the problem into hard to resolve comparing simple QP problem. MIQP guides in optimizing quadratic across points in a set in which certain elements are limited to be integer. Thereby, MIQP is a non-deterministic polynomial (NP) over time [20].

At every decision instantkT_c, the present state $x_k = x_{k\vee k}$is utilized to determine the sequence $u = \begin{bmatrix} u_{k\vee k}{}^T \\ . \\ u_{k+Py-1\vee k}{}^T \end{bmatrix}$ of optimum control, in which$u_{k\vee k} = u_k$through the subsequent minimization

$$u = \underset{u}{argmin}\left\{\sum_{i=0}^{P_y}\left(X^{max} - x_{k+j\vee k}\right)^T Q\left(X^{max} - x_{k+j\vee k}\right) + \sum_{i=0}^{P_u-1} u_{k+j\vee k}{}^T R u_{k+j\vee k}\right\}$$

Subject to

$$\begin{cases} \{x_{k+i+1\vee k} = w_x x_{k+i\vee k} + w_u u_{k+i\vee k} + w_v v_{k+i\vee k} \\ X^{min} \le x_{k+i\vee k} \le X^{max}, i = 0, \dots, P_y \\ \sum_{j=1}^{n} u_{jh} = d_h foreach(k+i\vee k) \\ \sum_{h=1}^{m} u_{jh} = 1 foreach(k+i\vee k) \\ u_{k+i\vee k} \in \{0,1\}^{mn}, i = 0, \dots, P_u - 1 \end{cases} \quad 14$$

In which Q$\in R^{n\times n}$ and R$\in R^{mn\times mn}$ are matrices of semi-definite and definite positive symmetry appropriately.

$P_u \le P_y$and$P_y$are the horizons of control and prediction appropriately. It is selected here$P_u = P_y$, so to adhere the limitations (10) and (13). $X^{max} = [X_1{}^{max}, X_2{}^{max} \dots\dots\dots X_n{}^{max}]^TandX^{min} = [X_1{}^{min}, X_2{}^{min} \dots\dots\dots X_n{}^{min}]$are the upper and lower limits of the states of battery, provided in vector representation, if entire nodes are regarded.

On abridging the states included for optimization (14) as $x = \begin{bmatrix} x_{k+1\vee k}{}^T \\ . \\ x_{k+P_y\vee k}{}^T \end{bmatrix}$with $X_{ex}{}^T = \begin{bmatrix} (X^{max})^T \\ . \\ (X^{max})^T \end{bmatrix}$, the matrix of function for cost is reframed as:

$$\underset{u}{argmin}\{(X_{ex}{}^{max} - x)^T \acute{Q}(X_{ex}{}^{max} - x) + u^T \acute{R} u\} \quad (15)$$

Where $\acute{Q} = diag(Q, \dots Q) \in R^{P_y n \times P_y n}$ and $\acute{R} = diag(R, \dots R) \in R^{P_u mn \times P_u mn}$

PARTICLE SWARM OPTIMIZATION (PSO)

PSO is a stochastically optimizing method on the basis of the gregarious behavior of animals flocking as swarms [22]. It is appropriate in optimizing of continuous or discontinuous, convex or non-convex topography. It operates through initializing the size of candidate solutions, termed particles, over the space of parameter being explored, and subsequently refreshing their locations over iterative size, so that converges to an end (normally global) solution for optimum. In PSO, the particles size P of a population, every particle with dimension *d*, are originally dispersed over the space of parameter. Particle *q* at iterative *i*, will have a $x_q(i)$ position, and related fitness $f_q(i)$. Every particle will have a recall about earlier best position $x_q{}^b(i)$ of its own and an associated fitness$f_q{}^b(i)$. Here$x^g(i)$, the position of global best is the position of particle related with best fitness $f^g(i)$ that was determined earlier across particle population. The particle position *q* is subsequently refreshed, swayed toward $x^g(i)$and $x_q{}^b(i)$. The common algorithm of PSO in minimizing cost function is described namely

1. Initialize the population with particle size P over dimensions *d*, with the lower and upper limits, in cost function space. Initialize the position$x_q{}^b$for particle *q*, and x^g is then initialized from the $x_q{}^b$ value with the lowest associated $f_q{}^b$ in the entire swarm of P particles.

2. $v_q(i)$ is particle *q* velocity during *i*th iterative and is refreshed for the subsequent iterative as namely

$$v_q(i+1) = \omega v_q(i) + c_1 r_1(i)^\circ \left(x_q{}^b(i) - xqi + c2r2i^\circ xgi - xqi\right. \quad (16)$$

In which ◦ specifies the product of Schur, $r_1(i)$ and $r_2(i)$are vectors of random with elements evenly dispersed in [0,1] interval, the ω the scalar positive is an inertial weight that directs the search and utilization of exploring space, and c_1 and c_2 are the constants of acceleration termed as cognitive and communal constituents, appropriately.

Utilized velocities of particles are limited through $v_{q_{min}} \le v_{q_{app}} \le v_{q_{max}}$ in which $v_{q_{min}}$ and $v_{q_{max}}$ are the min and max values on velocities of particles, appropriately, and $v_{q_{app}}$ is the exerted velocity of particle. When $v_q(i+1$ surpasses the aforesaid limits on velocities, the exerted velocity, $v_{q_{app}}$, is assumed as min or max, that is, when $v_q < v_{q_{min}}$, let $v_{q_{app}} = v_{q_{min}}$; if $v_q > v_{q_{max}}$, let $v_{q_{app}} = v_{q_{max}}$; else let $v_{q_{app}} = v_q$. The position, $x_q(i)$, of *q* at iterative of *i* in PSO is then refreshed for subsequent iterative namely

$$x_q(i+1) = x_q(i) + v_{q_{app}}(i+1). \quad (17)$$

3. Compute cost functional value at every particle position of P.

4. When to a particle of *q*, $f_q(i+1) < f_q{}^b(i)$, subsequently assume $x_q{}^b(i+1) = x_q(i+1)$.

If$f_q(i+1) < f^g(i)$, assume$x^g(i+1)x_q(i+1$. If$fqi+1 > fqbi \ge fgi$, then $xqbi+1$ and $x^g(i+1)$persist at similar position like in *i*th iterative.

5. Redo (2)-(4) till halting condition is reached, that is, a maximal iterative is performed, $x^g(i)$ will be unchanged for a specified iterative size, etc.

Automatic tuning of MPC using PSO optimization

PSO was earlier applied in optimizing the grouped MPC weights [23], consequently improving operation based on target condition. Normally the controllers for tuning mostly concern in upgrading features in setting operating parameters for tracking or perturbation exclusion system behavior. Fig 6 shows the structure of MPC using tuning optimization Yet, in iteration MPC, designers are interested using close-loop operation and the degree of communication applied to attain such control. It may be specifically of focus in networks of power systems in which brief sampling instants for control are required to manage the system, thereby restricting the communication extent permitted among agents. Hence, an algorithm for tuning the iterative MPC regards both the perturbation exclusion operation in system and the iterative size required for system convergence is acceptable for the

Published By:
Blue Eyes Intelligence Engineering
& Sciences Publication

systems with faster dynamics and power.

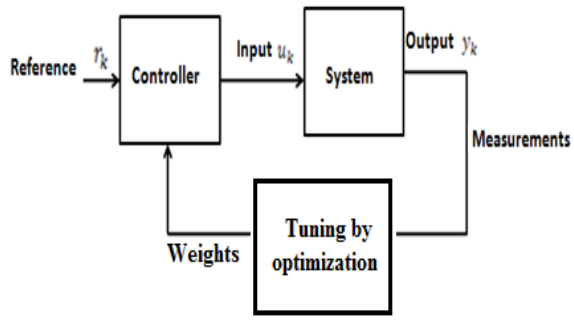

Fig 6 Structure of MPC using tuning optimization

A new PSO optimization algorithm dependent on weights of MPC agents is formulated. Additionally a condition for subduing iterative size required for MPC is suggested.

The $\Gamma = [\gamma_1 \dots \dots \gamma_n]^T$ comprises *n* tuning weights, containing the MPC perturbation exclusion affiliated weights connected to every local issue of every agent and the c and $\in$ are the weights which are connected to attaining concurrence among agents. For every particle of P in PSO, with *d* = *n* dimensions, simulation is performed for MPC tuning. This simulation is selected that incites every subsystem managed by agents of MPC reasonably, to organize the system for the occurrences that shall appear. The agent of *j* with local fitness $f_j^{local}(q,i)$ is assessed by simulation running on the particles of *q* at iterative *i* using PSO optimizer. The total local fitness of whole *n* agents, $\sum_{j=1}^{n} f_j^{local}(q,i)$, subsequently creates fitness for perturbation exclusion for simulation running on the particles of *q* at iterative *i* using PSO optimizer. If the system is allowed to optimize just for the perturbation exclusion, the particle fitness in the swarm is stated as follows

$$f_q(i) = \sum_{j=1}^{n} f_j^{local}(q,i) \qquad (18)$$

Where $f_q(i)$ is the particle fitness at *i* iterative. If it is focused to subdue the iterative size utilized for specified simulation, the cost for subduing iterative $\rho(q,i)$ is applied

$$\rho(q,i) = max\left(\mu(q,i)\right) \qquad (19)$$

Where $\mu(q,i)$ a vector of MPC iterative size is utilized at every sampling step during simulation run on the particles of *q* at iterative *i*. It is aimed to apply an iterative hindrance for the particle fitness at iterative *i* turns into

$$f(q,i) = \upsilon_\rho \rho(q,i) + \sum_{j=1}^{n} f_j^{local}(q,i) \qquad (20)$$

where $\upsilon_\rho \geq 0$ is constant utilized to find the comparative significance of the cost of iterative hindrance to the cost of perturbation exclusion while optimizing.

Algorithm of weight optimization for PSO

1. A population of random with particles of size P is initialized over dimensions *d*, with $X^{min} \leq x_q \leq X^{max}$, where $\upsilon_\rho \geq 0$ and $X^{max} \geq 0$ is the min and max bounds on position x_q of particle *q*. When better original measurements are familiar beforehand, certain particles are commenced using such values rather.

2. For a particle *q*, $f_j^{local}(q,i) \forall j = 1 \dots n$ is fitness function and subsequently $f_q(i)$ is computed using (14).

3. On the basis of this fitness an algorithm of PSO refreshes every *q* particle its own best position $x_q{}^b(i)$ and fitness in terms of this position, $f_q{}^b(i)$, $\forall q = 1, \dots, P$, and $x^g(i)$, the universal best position, its related fitness $f^g(i)$ and subsequently evaluates the subsequent positions using fitness on the basis of (16) and (17). Subsequently using these particles P, the algorithm redoes the steps from (2).

4. The algorithm stops if a halting condition is attained. In this paper it occurs if $f^g(i)$ gets unchanged until attaining stated narrow allowance for PSO iterative size.

FLOWER POLLINATION OPTIMIZATION (FPO)

Let $xi = [x_{i1}, x_{i2}, \dots, x_{in}]$ be the pollen population. The two scale factors are α and β. *p* is switching probability [24]. G is maximum generation and

$$p = 0.6 - 0.1 \times \left(\frac{Max_{Iter} - t}{Max_{Iter}}\right)$$

FPO Algorithm in automatic tuning of MPC

Input: *p*, α, β and *G*.

1. Randomly create a realizable flowers/pollen gametes population of $x_i(t)$
2. Determine the best answer g_{best} in the original population
3. **While** *t* is less than maximum generation
4. **For all** *n* candidates in a population **do**
5. Obtain p from $0.6\text{-}0.1\times\left(\frac{Max_{Iter}-t}{Max_{Iter}}\right)$
6. If *rand* is less than *p*
7. Compute using the switching probability, the pollination type of global or local is chosen and the follower locations are modified in harmony using update equations given

$$x_i^{\,t} - g * x_i^{\,t+1} = x_i^{\,t} + L$$

for global pollination

where L is the increment vector that follow Levy distribution, $x_i^{\,t}$ is the gamete (pollen) of *i* or vector x_i as solution at *t* iterative and $g *$ is the best present solution determined amongst whole outcomes at present iterative.

8. Else consider ε as uniform distribution between 0 and 1 and compute ,choose *j* and *k*

$$x_i^{\,t+1} = x_i^{\,t} + \varepsilon\left(x_j^{\,t} - x_k^{\,t}\right)$$

for local pollination

where $x_j^{\,t} \wedge x_k^{\,t}$ are pollens from diverse flowers of the similar plants

9. end
10. The fresh locations are then inspected to find whether the result is within the zone (basic boundaries).
11. The fitness value for new solutions is calculated. When observed better, the solutions are refreshed in the population.
12. The best outcomes finally after maximum iterations are the algorithm output.
13. The best estimate is calculated by utilizing the equation (14)

IV.SIMULATION

All nodes are in active modes initially during simulation. Their modes are unmodified and they develop into active mode until remote status, for example, if the battery of node reaches its least energy position X^{min}. The energy regulation of the nodes at real time requirement is assessed by simulation using Matlab. It is considered that every node can take one of the three modes: m = 2 operating modes and the remote status

Mode	Units		
	Sensing	Computing	Communication
M_1	ON	ON	Radio
M_2	OFF	SLEEP	OFF

Table 2 Functioning Modes of any sensor node

Mode		Units		
		Sensing	Computing	Communication
M_1	Active	ON: for every duty cycle		
M_2	Standby	ON: only beyond duty cycle		
M_3	Unreachable	OFF: not seen by Supervisor		

Table 3 Functioning Modes of any sensor node

Battery type	Nominal voltage V_i, [V]	Nominal battery capacity P_i, [mA · hour]	Harvesting availability E_i/V_i, [mA · hour]	Energy coef. β_i, [1]	Harvesting period, *per 24 hours*
LiPo	3.7	1050	21	0.9	7h-12h

Table 4 Node battery and harvesting Characteristics

Average current consumption in mode M_1, [mA·hour]	Average current consumption in mode M_2, [mA·hour]
9.86	1.63

Table 5 Average Power consumption by sensor nodes in M_1 and M_2

The limitations on states (8), that is, the maximum and minimum energy position of the battery of node Si, are defined as $X^{max} = P_i V_i$ and $X^{min} = \beta_i X^{max}$, respectively. P_i is the theoretical power and V_i is the theoretical voltage of the battery. The original value of the state **x**0 is too furnished in Table 3: for every node, it takes the value of $\beta_i X^{max}$, where β_i is any energy coefficient.

Published By:
Blue Eyes Intelligence Engineering
& Sciences Publication

The weight matrices Q and R that emerge in descriptions of $\acute{Q}$and $\acute{R}$ in (15) are selected on the basis of control targets namely

1. The nodes are penalized with excessive energy utilization contrasting with other nodes, Q and R are described like $Q = \mathbf{0_{4\times4}}$, $R = w_{u_{cons}}{}^{T} \times w_{u_{cons}}$, where$w_{u_{cons}}$= iag($w_{u11}$,$w_{u12}$,…$w_{u41}$,$w_{u42}$).
$w_{u_{cons}}$is obtained out of w_u (Table 4), in which the elements $w_{u\text{ih}}$, where i = 1,…4 and h = 1, 2, of $w_u$were located diagonal to guarantee that R is a matrix with definite positive symmetry. The choice $Q = \mathbf{0_{4\times4}}$lies because of that the dynamics of the states must develop effortlessly as much as possible
2. To guarantee the tradeoff between least energy utilization and the greater battery energy for the nodes to be invigorated, R and Q described

$$Q = diag\left(\frac{1}{X_1{}^{max}}, \ldots\ldots \frac{1}{X_4{}^{max}}\right),\ R = w_{u_{cons}}{}^{T} \times w_{u_{cons}}$$

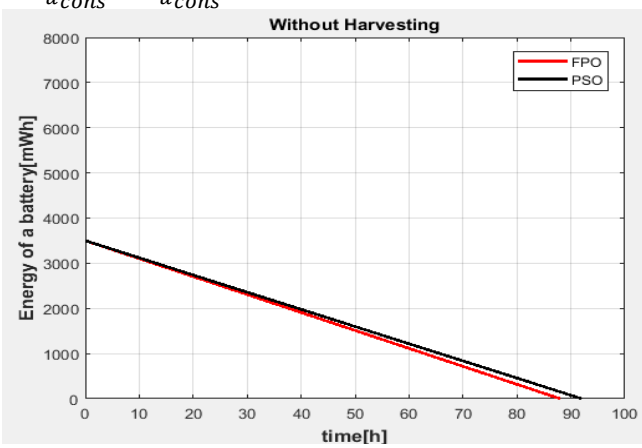

Fig 7 (a) Comparison of PSO and FPO based MPC tuning on sensor node without harvesting

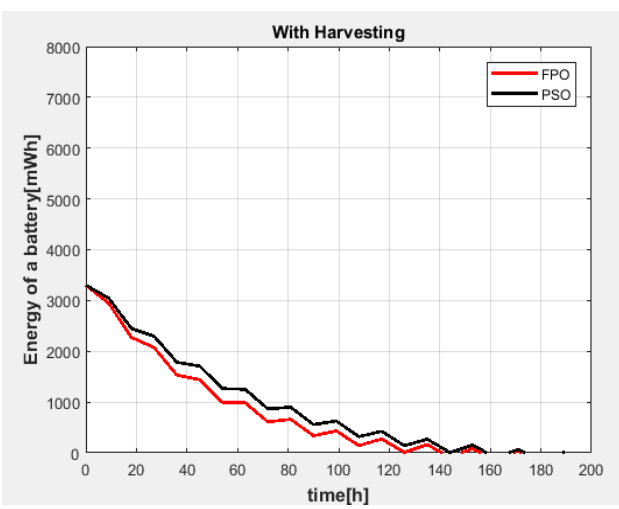

Fig 7 (b) Comparison of PSO and FPO based MPC tuning on sensor node with harvesting

Fig 7(a) and Fig 7(b) depict the energy development in node battery with devoid of and with harvest systems appropriately. The network longevity in terms of the time interval if the mission is achieved is 90 hours with devoid of harvest system, and 180 hours using harvest systems. The oscillating action in energy of the battery of the sensor is consistent with the harvesting profile. PSO based tuning of MPC is superior in refilling drained charge of sensor battery in comparing with FPO based tuning of MPC

V.CONCLUSION

An optimum tuning technique of MPC using PSO and FPO are proposed. The weights optimum tuning issue of the MPC is greatly depend on feedback control law of the MPC system. The weights involved in the optimum control describes the feedback and the technique for optimal tuning of weights of WSN, involved specifically in the depleting energy cost function on the basis of the output perceived by the sensors. The target function of the optimum weight tuning for MPC is a non convex and non rational, and use of a general rational technique, namely the gradient approach, is hard. Which is why, the purpose in using of PSO and FPO was that both were efficient meta-heuristics approaches and were realized, and their strength was validated through simulation. More particularly it validates that PSO is quite powerful in determining the optimum MPC weights with less oscillatory during harvesting globally comparing FPO technique. To facilitate the discussion, it is presumed that the input for control and the states of WSN have limitations and the WSN states are entirely perceivable and the output equation for refilling of depletion energy is considered. The aim here is also in tuning the coefficients of the weights of the cost function optimally as optimum control problem of MPC. The target function implies that the best possible solution occurs as a group and, PSO and FPO seek those solutions. The expansion of meta-heuristics exploring serially the whole sets of optimum solutions must be regarded as a future work.

REFERENCES

1. I. F. Akyildiz, T. Melodia and K. R. Chowdhury, “Wireless Multimedia Sensor Networks: Applications and Testbeds,” Proceedings of the IEEE, vol. 96, no 10 pp. 1588 - 1605, 2008.
2. C. Buratti, M. Martalò, R. Verdone and G. Ferrari, “Wireless Sensor Networks,” in Sensor Networks with IEEE 802.15.4 Systems, Springer, 2011, pp. 3-28. w_u
3. A. Jangra, Swati, Richa and Priyanka, “Wireless Sensor Network (WSN): Architectural,” International Journal on Computer Science and Engineering, pp. 3089-3094, 2010.
4. A. Didioui. Energy-aware transceiver for energy harvesting wireless sensor networks, PhD thesis, Universite Rennes 1, 2014

5. C. Alippi, G. Anastasi, and M. Di Francesco, M.andRoveri. Energy management in wireless sensor networks with energy-hungry sensors. IEEE Instrumentation & Measurement Magazine, 12(2):16-23, 2009.
6. N. Verma and A.P. Chandrakasan. An ultra low energy 12-bit rate-resolution scalable saradc for wireless sensor nodes. IEEE Journal of Solid-State Circuits, 42(6):1196-1205, 2007.
7. B. Lo and G.-Z. Yang,. Architecture for body sensor networks, In Perspectives in Pervasive Computing, pages 23-28, 2005.
8. K. Mikhaylov and J. Tervonen. Optimization of microcontroller hardware parameters for wireless sensor network node power consumption and lifetime improvement, In International Congress on Ultra Modern Telecommunications and Control Systems and Workshops, pages 1150-1156, 2010
9. A. De La Piedra, A. Braeken, and A. Touha_. Sensor systems based on fpgas and their applications: a survey. Sensors, 12(9):12235{12264, 2012.
10. M.A.M. Vieira, C.N. Coelho, Jr. da Silva, D.C., and J.M. da Mata, Survey on wireless sensor network devices, In IEEE Conference Emerging Technologies and Factory Automation, volume 1, pages 537{544, 2003
11. S. Roundy, P. K. Wright, and J. Rabaey. A study of low level vibrations as a power source for wireless sensor nodes, Computer Communications, 26(11):1131-1144, 2003.
12. G. Pistoia. Battery operated devices and systems: From portable electronics to industrial products. Elsevier, 2008.
13. M.K. Stojcev, M.R. Kosanovic, and L.R. Golubovic, Power management and energy harvesting techniques for wireless sensor nodes, In 9th International Conference on Telecommunication in Modern Satellite, Cable, and Broadcasting Services, pages 65-72, 2009,
14. M. Healy, T. Newe, and E. Lewis, Wireless sensor node hardware: A review. In IEEE Sensors, pages 621-624, 2008
15. Thiagarajan S, P Gowthaman, M Venkatachalam, PSO and FPO based Optimization of Energy Efficiency for RF powered Wireless Sensor Networks, International Journal of Pure Applied Mathematics, Vol 119, pg no 2099-2110, 2018
16. D. Q. Mayne, J. B. Rawlings, C. V. Rao, and P. O. M. Scokaert. Constrained model predictive control: Stability and optimality, Automatica, 36(6):789-814, 2000.
17. J. B. Rawlings and D. Q. Mayne, Model Predictive Control: Theory and Design.Nob Hill Publishing, 2009.
18. J. M. Maciejowski, Predictive control: with constraints, Pearson education, 2002
19. A. Bemporad and M. Morari, Robust model predictive control: A survey. In Robustness in Identification and control, pages 207-226. Springer, 1999
20. D. Jung, T. Teixeira, A. Barton-Sweeney, and A. Savvides. Model-based design exploration of wireless sensor node lifetimes, In Wireless Sensor Networks, pages 277-292. Springer, 2007
21. Rajesh, M., and J. M. Gnanasekar. "Path Observation Based Physical Routing Protocol for Wireless Ad Hoc Networks." Wireless Personal Communications 97.1 (2017): 1267-1289.
22. Rajesh, M., and J. M. Gnanasekar. "Sector Routing Protocol (SRP) in Ad-hoc Networks." Control Network and Complex Systems 5.7 (2015): 1-4.
23. Rajesh, M. "A Review on Excellence Analysis of Relationship Spur Advance in Wireless Ad Hoc Networks." International Journal of Pure and Applied Mathematics 118.9 (2018): 407-412.
24. Rajesh, M., et al. "SENSITIVE DATA SECURITY IN CLOUD COMPUTING AID OF DIFFERENT ENCRYPTION TECHNIQUES." Journal of Advanced Research in Dynamical and Control Systems 18.
25. Rajesh, M. "A signature based information security system for vitality proficient information accumulation in wireless sensor *systems." International Journal of* Pure and Applied Mathematics 118.9 (2018): 367-387.
26. Rajesh, M., K. Balasubramaniaswamy, and S. Aravindh. "MEBCK from Web using NLP Techniques." Computer Engineering and Intelligent Systems 6.8: 24-26.