International Journal of Recent Technology and Engineering (IJRTE)
ISSN: 2277-3878 (Online), Volume-7, Issue-6, March 2019

Analysis of FSO System under Clear and Rain Conditions

K.Sony, V.N.M. Sri Harsha Kurella, Roopesh Mallisetty, Bh. Sai Vardhan, M.S.S.Datta

Abstract*: *Free Space Optical Communication System (FSOC) is one of the trending communication technologies where the communication will be based on the propagation of light. Light cannot travel everywhere alike due to the differences in atmospheric and climatic conditions. So, to bring this kind of system in practice, there is a requirement of testing it for various climatic and atmospheric conditions. Here in this work, such a testing was done on a system with Wide Division Multiplexing under very clear, clear and rainy conditions. The mathematical part for getting the attenuation levels is mentioned below in chapters. After examining the system, the variation of the bit rate and the quality factor, bit error rate were observed. Along with that, all the devices that will be using in the system are analyzed individually and got to know how each and every device work and how their variation would affect the entire communication system.

Keywords*— *FSOC (Free Space Optical Communication), Quality Factor, BER (Bit Error Rate), WDM (Wide Division Multiplexing)

I. INTRODUCTION

Free Space optical communication system is type of communication system which uses free space as a medium for communication. It became a trending communication system in the present generation as it is having a very high data transmission rate. As it became the solution for the last mile problem, it gained some more importance as a better communication system. FSO system has three different possible wavelengths of light which are helpful for a fruitful output. They are 850nm, 1310nm, 1550nm. Each of the wavelengths are having their own advantages and disadvantages[1]. The 1550 nm wavelength has an advantage that they won't affect the human eyes and the disadvantage is that it can't be used if the attenuation is high for long distances. The 1310 nm wavelength is having the advantage that it can be used for long distances with high attenuation. The disadvantage is that it affects the human eye. [2]The 850nm wavelength light can be used for small distances with any kind of attenuation but the effect on nature. Many great organisations like NASA are doing research on this particular field for a communication system that can be used through deep space. Wireless communication systems like this system are very useful than the wired because the cost/ maintenance for the system will be decreased. Now-a-days, the usage of RF communication system is high. There should be a lot of work to be done as an individual for the society by knowing about how what and why this communication system is required. As we can not control the natural calamities, we can control the pollution, and other weather affecting practices as we know that the light particle can be affected by any of those practices. Not only making the communication system better but also making the society a healthy one. The above point of making the surroundings free from such affecting pollution because this system is a cheap and best system if the surrounding conditions support it as best as they can. The major atmospheric effect is scintillation. It occurs due to the differences in the temperature and pressure in the atmosphere. This results in the unevenness of refractive index of air through which the light beam is travelling. The light beam gets deflected from its path and may not reach the receiver. Another major effect is absorption, which occurs due to water molecules and other gaseous molecules present in air. Absorption reduces the intensity of light beam. Suspended particles in air scatter the light beam and may cause Rayleigh or Mie scattering depending on the size of scattering particle. There are some more physical obstacles; they are birds flying in the sky, long poles, some toxic gases released from industries or vehicles. These obstacles obscure the light to travel from the transmitter to the receiver.This paper is organized as follows. Chapter I will be about Weather Effects and Mathematical Modelling and the techniques used at the transmitter end, Section II will be about System Model which explains about the components in the transmitter and the receiver as well. Section III will be about Results and Section IV will be the Conclusion followed by Acknowledgements and References.

Revised Manuscript Received on 30 March 2019.
* Correspondence Author
K. Sony*, Asst Professor Dept. of ECE, Koneru Lakshmaiah Education Foundation, Vaddeswaram, Guntur District, India.
V. N. M. Sri Harsha Kurella, Student, Dept. Of ECE, Koneru Lakshmaiah Education Foundation, Vaddeswaram, Guntur District, India.
Roopesh Mallisetty, Student, Dept. of ECE, Koneru Lakshmaiah Education Foundation, Vaddeswaram, Guntur District, India.
Bh. Sai Vardhan, Student Dept. of ECE, Koneru Lakshmaiah Education Foundation, Vaddeswaram, Guntur District, India.
M.S.S.Datta, Student, Dept. of ECE, Koneru Lakshmaiah Education Foundation, Vaddeswaram, Guntur District, India.

CHAPTER - I

1.1 Weather Effects:

Generally, the preferable weather condition for FSO is 'Clear Weather'. But there will be various weather conditions like rain, fog, snow etc. The effect by raindrop is that if the radius of the raindrop is more than the wavelength of light then the raindrop absorbs the light ray. Fog and haze act as the major deterrents to the optical signal and can completely hinder the path of light[3].

The effects other than these would be from the transmitter side or from the receiver side i.e. if at all any discrepancy is there in the circuit or in the devices then there will be error. In this work the very clear, clear, rainy conditions are considered[4].

1.2 Mathematical Modeling:

These atmospheric turbulences and weather effects are mathematically modeled as Specific attenuation because of rain:

$\alpha_{Rain} = k_1 R^{k2}$

Where R= Rain rate in mm/hr

k_1= Model parameter that depends on rain drop size.

k_2= Model parameter that depends on rain drop temperature.

Here the model parameters are considered from Rain attenuation prediction model proposed by ITU-R for FSO.[9]

1.3 Technique used (in transmitter side for multi-beams):

The technique used for transmitting multi beam is

1. Wavelength Division Multiplexing

1.3.1 Wavelength division multiplexing (WDM):

It is a technique which multiplexes multiple optical carriers onto

a single optical fibre or a single beam transmitted through free space. These carriers are called channels and differ in their wavelength. WDM proliferates the data transfer capability of the system. It uses a multiplexer at the transmitter to club the input signals and a de-multiplexer at the receiver to de-multiplex the individual signals from the received signal. An add-drop mux can be used anywhere in the channel to add new signal to the multiplexed signal or

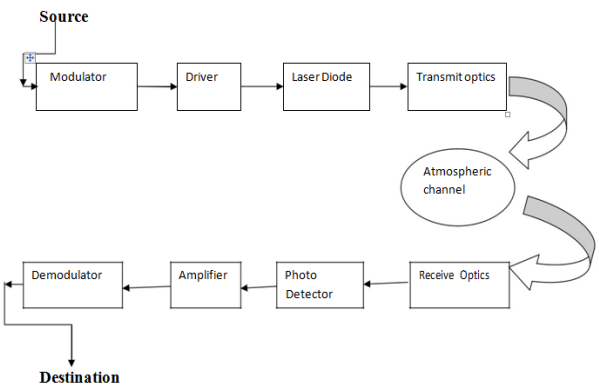

remove some signals from it.

Fig 1.1 Block Diagram of FSO System.

CHAPTER - II

II. SYSTEM MODEL:

This system consists of a transmitter and a receiver and the channel in between them is free space[5]. The transmitter consists of the following devices:

1. Bit Generator
2. Pulse Generator
3. Optical Source
4. WDM & Fork
5. Modulator
6. Amplifiers / Filters (If Any required.)

2.1 Bit Generator:

Generally, there are two types of bit generators. One is Pseudo-random bit generator and the other one is user defined bit generator. The PRBG mainly deals with generating the bit sequences by considering the following parameters. Bit Rate, Operation mode, Order of the generator, Probability of 1's in the sequence etc. These parameters can be varied as per the user requirement but the sequence cannot be selected by the user. The User defined sequence generator will also have some parameters through which the user can select the bits that are to be transmitted.

2.2 Pulse Generator:

There are 12 types of Electrical pulse generators in OptiSystem software. They are NRZ Pulse Generator, RZ Pulse Generator, Gaussian Pulse Generator, Hyperbolic-Secant Pulse Generator, Raised Cosine Pulse Generator, Sine Pulse Generator, Triangle Pulse Generator, Saw-Up Pulse Generator, Saw-Down Pulse Generator, Impulse Generator, Sine Generator and Measured Pulse Sequence. All these are having common functioning but the main difference comes at the shape of the sequence. Their names itself tells us about the shape of the pulse.

2.3 Optical Source:

There are different kinds of sources that we can use. CW LASER and its array are most commonly used LASERS. CW means Continuous Wave. This LASER will be continuously pumped and continuously emits the light. This can emit light either in single frequency mode or multi frequency mode. The main parameters are Emission frequency, Power, Line width, Initial phase. Emission frequency is the frequency of the light ray that is to be emitted. Line width means the spectral width of the light. Power of the light emitting has to be set by the user as per the weather or any other conditions. Initial Phase in which the light has to be emitted should also be set by the user.

2.4 WDM Mux & Fork:

WDM means Wavelength Division Multiplexing. In this device the n optical waves are multiplexed into single wave. Fork is a device which split the signal into user defined number of signals with different wavelengths. These are used in the circuit in order to transmit the data either in a single beam or in multiple number of beams as per the requirement of the user.

2.5 Modulator:

Generally modulator is a device which boosts up the amplitude of the signal. Here we are using Optical Amplifiers in this system as we are transmitting and receiving the light rays.

2.6 Amplifier:

It is a device that boosts the amplitude of the signal. In order to recoup the attenuation losses, these amplifiers are used. Because of their reliability, flexibility and low cost they are mostly preferred. It is basically a LASER without a feedback. It works on stimulated emission. Examples of optical amplifiers are semiconductor amplifiers, Raman amplifiers, fibre doped amplifiers etc.

The receiver consists of the following devices:

1. WDM Demux & Fork
2. Photo detector
3. Filter
4. 3R Generator
5. BER Analyser

2.7 WDM Demux & Fork:

[6]As multiplexing is done in the transmitter side, in receiver side it has to be de-multiplexed in order to get the original signal. In this device the single optical wave is de-multiplexed into n optical waves. Fork is a device which not only splits the signal into user defined number of signals with different wavelengths but also it combines all the signals making into single wave. These are used in the circuit in order to convert the received data which are in multiple numbers to a single beam as per the requirement of the user.

2.8 Photo detector:

After the transmission, we will receive optical signal which later is to be converted into electrical signal in order to get the data identified by any device. In order to convert the optical signal to electrical signal, we require the device. Such a device is known as photo detector.

2.9 Filter:

Without any note or proof some unwanted data will lbe added to our data which is nothing but Noise. To remove such noise, we must use different kinds of filters which will help to retrieve our required data. There are many types of filters based on the bandwidth up to which frequency they can filter. They are low pass filter, band pass filter, band reject filter, high pass filter etc.

2.10 Regenerator:

This device is like an add-on to the filter. This device has 3 kinds where the first kind 1R generator does only the re-amplification of the signal, the 2R generator not only does re-amplification but also pulse re-shaping. The 3R generator would be the choosey one because it does re-amplification, pulse re-shaping and also re-timing of the data pulse.

2.12 BER Analyzer:

[7]BER is nothing but the Bit Error Rate. This analyzer is used to know how many errors are there in the bits that are received when compared to the transmitted bits. Not only bit errors but also it tells about the quality factor and eye height.

2.13 Quality factor:

The quality factor gives the relation between energy stored and the energy dissipated per cycle.

$$Q = E_{stored}/E_{dissipated}$$

CHAPTER - III

III. RESULTS AND DISCUSSIONS

Here, in this work, an FSO system is designed using OptiSystem software and at the channel part various conditions like link range and attenuation were given and the quality factor and bit error rate were verified[8].
The following is the plot for the very clear condition with attenuation = 0.065 dB/km.

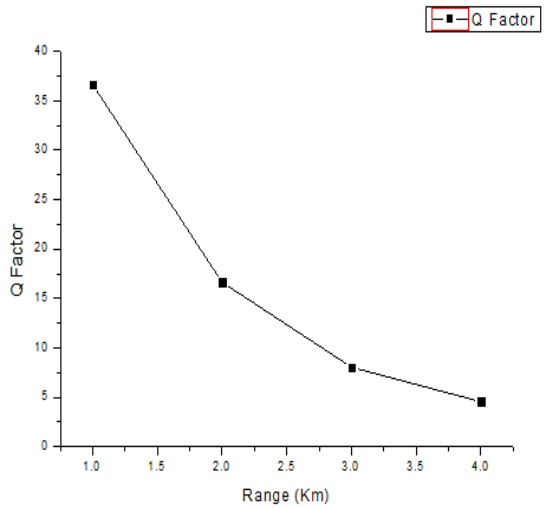

Fig. 3.1 Q Factor Plot for very clear condition

The above plot shows how the output power varies along with the range. As we need power to be transmitted to long ranges, we can increase the amplifier gain. This plot is from a system having an amplifier gain of 90 dB

The Q factor can be increased by maintaining an amplifier with high gain. Here we can also observe that as the link range increases, the Q Factor is getting decreased.

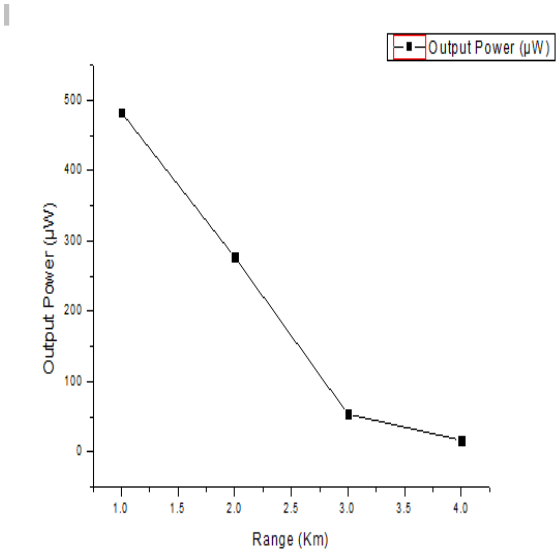

Fig. 3.2 Output Power Plot for very clear condition

The above plot shows how the output power varies along with the range for a clear weather condition. As we need power to be transmitted to long ranges, we can increase the amplifier gain. This plot is from a system having an amplifier gain of 90 dB. Also, the quality factor also varied along with the range and attenuation.

Fig. 3.3 Output Power Plot for clear condition

The attenuation for this weather condition is 0.233 dB/km. The above plot shows how the output power varies along with the range for a clear weather condition. As we need power to be transmitted to long ranges, we can

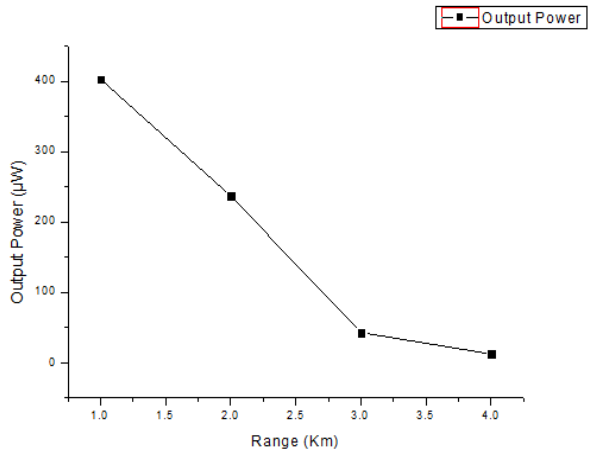

increase the amplifier gain. This plot is from a system having an amplifier gain of 90 dB. Also, the quality factor also varied along with the range and attenuation[9].

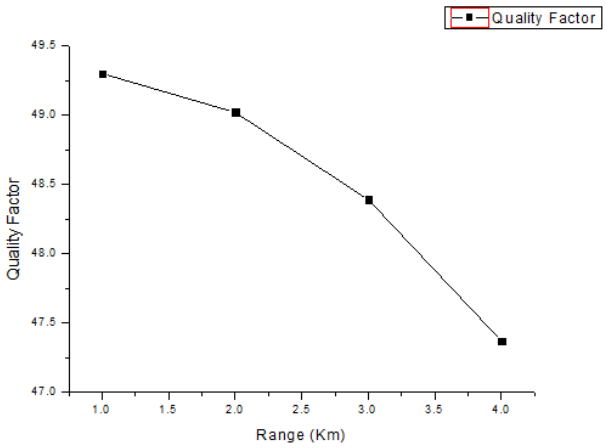

Fig. 3.4 Q Factor Plot for very clear condition

The above plot shows the variation of quality factor with the link range.

Also, weather conditions of three cities from Andhra Pradesh are considered and their attenuations are calculated and the quality factor and the BER are observed. The following table shows the values of the cities.

Table 3.1 Results from OptiSystem for various cities weather conditions.

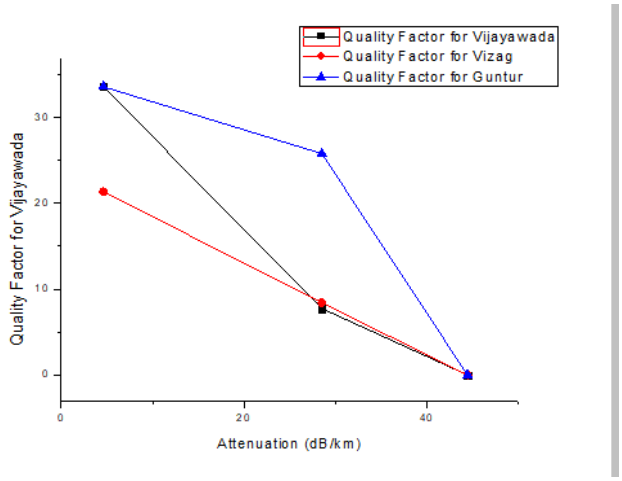

Fig 3.5 Three cities Quality Factor Comparison

In the above plot, the attenuation for different rainfalls like little rain fall, medium rainfall and heavy rainfall is considered and the quality factor of the system with that attenuation is noted and their variation was plotted.

under Clear and Rain Conditions

Weather Condition	Input Power	Attenuation	Range	Gain	Q Factor	BER	Output Power
Vijayawada Rainfall							
Little Rain	2 W	1.076 dB/km	1 Km	60 dB	33.60	6.61e-248	2.79 nW
Medium Rain	2 W	28.92 dB/km	1 Km	80 dB	7.75	4.38e-15	0.075 nW
Heavy Rain	2 W	43.49 dB/km	1 Km	100 dB	0	1	0 W
Guntur Rainfall							
Little Rain	2 W	1.076 dB/km	1 Km	60 dB	33.60	6.61e-248	2.79 nW
Medium Rain	2 W	25.85 dB/km	1 Km	80 dB	25.8	1.98e-44	0.133 nW
Heavy Rain	2 W	33.72 dB/km	1 Km	100 dB	0	1	0 W
Visakhapatnam Rainfall							
Little Rain	2 W	4.61 dB/km	1 Km	60 dB	21.37	1.18e-101	0.537 nW
Medium Rain	2 W	28.5 dB/km	1 Km	80 dB	8.42	1.76e-17	0.091 nW
Heavy Rain	2 W	44.42 dB/km	1 Km	100 dB	0	1	0 W

CHAPTER - IV

IV. CONCLUSION

Free space optical communication system is designed in Opti System software and the parameters are given as per the calculations that are done based on the locations Vijayawada, Guntur and Visakhapatnam. Not only about the locations but also the variation of quality factor for various amplifier gains and also for different ranges is observed. The attenuation in real time may be varied when compared with the calculated value. This system is examined for three rainfall conditions like little rain, medium rain, heavy rain is observed by adding the attenuation calculated by the formula mentioned above. The meteorological data are considered from the authorized sites over internet and the other values required for the calculation are considered from references and the attenuation and quality factor variations for all the three cities are plotted and displayed above.

REFERENCES

1. K.Sony, "Propagation Studies in Free Space Using RZ and NRZ Optical Links Under Atmospheric Turbulence" International Journal of Engineering & Technology, Vol 7(3.27)(2018)627-630.
2. Shaina, Comparative Analysis of Free Space Optical Communication System for Various Optical Transmission Windows under Adverse Weather Conditions Amit Gupta, and Shaina Procedia Computer Science 89 (2016) 99 – 106
3. In Keun Sonb, A survey of free space optical networks, Shiwen Maoa, Digital Communications and Networks 3 (2017) 67–77
4. Muhammad Saleem Awan, Characterization of Fog and Snow Attenuations for Free-Space Optical Propagation, JOURNAL OF COMMUNICATIONS, VOL. 4, NO. 8, SEPTEMBER 2009
5. Preeti Singh, Comparative Analysis of Point to Point FSO System Under Clear and HazeWeather Condition, DOI 10.1007/s11277-014-2022-6
6. Mehdi ROUISSAT, Free Space Optical Channel Characterization and Modeling with Focus on Algeria Weather Conditions DOI: 10.5815/ijcnis.2012.03.03
7. Shamsudheen P, Performance Analysis of Visible Light Communication System for Free Space Optical Communication Link, International Conference on Emerging Trends in Engineering, Science and Technology (ICETEST 2015)
8. Hemani Kaushal, Optical Communication in Space: Challenges and Mitigation Techniques, 1553- 877X (c) 2016 IEEE.
9. SURIZA A.Z, Analysis of rain effects on terrestrial free space optics based on data measured in tropical climate IIUM Engineering Journal, Vol. 12, No. 5, 2011: Special Issue -1 on Science and Ethics in Engineering Suriza et al.
10. Sony,K. "Modelling the systems for improvised performance in FSO Networks,Journal of advanced research in dynamical and control systems",Volume 9,Issue Special Issue 14,2017,Pages 2627-2636.

AUTHORS PROFILE

K. Sony is pursuing PhD degree in K L University, Vijayawada in the faculty of Electronics and Communication Engineering , specialized in Optical Communication. She received her Master of Engineering Degree in Laser and Electro optical engineering from Anna University, Chennai.Her present affiliation is with K L University since 2012 , Vijayawada designated as Assistant professor in ECE. Her research interests are Optical Communication and Free Space Optics.

V. N.M. Sri Harsha Kurella was born in 1998 at Hyderabad. He is currently pursuing B.Tech in Electronics and Communication Engineering at KL Deemed to be University. His areas of interest include Free Space Optics.

M.Roopesh was born in 1997 at Nellore. He is currently pursuing B.Tech in Electronics and Communication Engineering at KL Deemed to be University. His areas of interest include Free Space Optics.

Bh. Sai Vardhan was born in 1998 at Tiruvuru. He is currently pursuing B.Tech in Electronics and Communication Engineering at KL Deemed to be University. His areas of interest include Free Space Optics.

.

M.S.S.Datta was born in 1998 at Vijayawada. He is currently pursuing B.Tech in Electronics and Communication Engineering at KL Deemed to be University. His areas of interest include Free Space Optics.