International Journal of Recent Technology and Engineering (IJRTE)
ISSN: 2277-3878 (Online), Volume-7, Issue-6, March 2019

Wireless Battery Charger Based Charging Station for Eva Vehicle With Pave Inclusion

V. Kubendran, S. Senthilmurugan, A. Aswin

Abstract: ***Now a days, we are in situation to create pollution free environment. Per year _60%_ Percentage of pollution was created by vehicle Co2 emission in addition to that, the availability of petroleum product for upcoming years also create problem to our fast lifestyle. So, vehicle manufacture increasing their research and production of Electric vehicle, which is one option to create pollution free environment and to minimize scarcity of petroleum products. Now the charging station is the main problem for Electric vehicle, especially it will create big problem in our India which is under the category of developing country .In this paper we are discussing about charging station of Electric vehicle including PV (photovoltaic panel /solar panel) and wireless battery charger .Here we are using new QDQ (Quad D quadrature)-QDQ coil design which increase the efficiency of power transfer at reasonable misalignment. This QDQ-QDQ structure use 2 sets of - 4 adjustment Q coils present inside 1 D coil. The coil design was made using JMEG FEM software to calculate inductive parameter and overall performance calculation from PV to DC Battery storage was checked using MATLAB..***

Index Terms**: *EV (Electric vehicle), PV (Photovoltaic), Wireless charging, QDQ (Quad D Quadrature).***

I. INTRODUCTION

Due to increasing greenhouse gas radiation, and scarcity of petroleum products for upcoming years makes vehicle manufactures to find out alternative solution like Electric vehicle, hydrogen car etc. The electric vehicle become famous from 21st century from 2010 to 2016 around 1 million electric vehicles including (cars, vans and trucks) was utilized by consumers. India will also going to be part in upcoming years. In this paper the power levels of battery charging and the infrastructure required for EVs are described[1].But charging station become major problem now a day especially for India which is under the category of developing country. So in this paper we are focusing mainly on charging station for electric vehicle it will be very much help full for India which is under the category of developing country.

As of now, three types of Charging Station are available for this Electric vehicle

Revised Manuscript Received on 30 March 2019.
***** Correspondence Author

V.Kubendran*, Department of Electrical and Electronics, SRM Institute of Science and Technology, Chennai, India..

S.Senthilmurugan, Department of Electrical and Electronics, SRM Institute of Science and Technology, Chennai, India.

A.Aswin, Department of Electrical and Electronics, SRM Institute of Science and Technology, Chennai, India.

TYPE 1: EV charging station –120v AC Plug
TYPE 2: charging Station -240v /280v AC Plug
TYPE 3: DC Fast charger

By considering the worry of electric car owners to find out suitable charging point, High cost and space consideration make us to move Type 4: wireless battery charger. This paper Discuss about charging station for electric vehicle with the combination of PV power and wireless battery charger.

We are now in situation to rectify drawbacks that found in wireless battery charger. Even though many advantages present in this wireless battery charger there are some Disadvantages will also present

1) Charging time
2) Efficiency in performance
3) Misalignment between sender and receiver

In this paper we are using QDQ – QDQ coil structure with LCC -LCC compensation. As compare to many other Basic topologies of compensation methods like primary series-secondary series (SS), parallel-series (PS), primary series-secondary parallel (SP), parallel-parallel (PP) and other high order topologies such as LLC -S, CLC-LC, LCL-LC (L- inductor, C-capacitor and S-series connected capacitor). The LCC-LCC compensation methods has proven to have higher efficiency so in this paper we are using LCC (primary) - LCC (secondary) for achieving higher efficiency. We have introduced new model of coil design QDQ – QDQ structure for reaching high Misalignment tolerance.

In wireless battery charge there is the chance of misalignment between charging coil (primary) and Pick -up coil (secondary). Due to misalignment in power transmission, the coupling coefficient produce between coils and design will reduce. So here we are in the situation to develop a coil design to withstand misalignment between both coils (Primary and secondary). Most of our current wireless charger are design as in circular, Oval and rectangular. From circular coil design we can achieve efficiency but it does not consider about misalignment .when misalignment acquire the output power get reduce. Then oval shape coil design was introduced but it is not helpful to transfer High power. Later DD pad design (2 rectangular coil joins together) was introduced. Its size is much larger than circular pad. But this pad design has good misalignment tolerance in X-Direction but poor in Y-Direction. So, we can't use this method for all direction alignment tolerance issue. In this paper we introduce new form of coil design QDQ (quad D quadrature)-QDQ (quad D quadrature) to perform misalignment tolerance in both X and Y direction.

The overall block diagram and circuit diagram for wireless battery charging station is shown in fig 1 and 2.

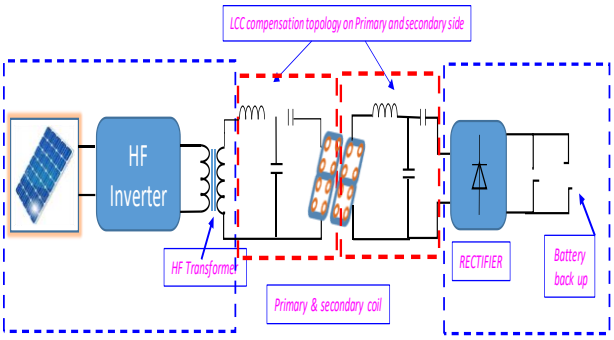

Fig.1 Block diagram of wireless battery charger

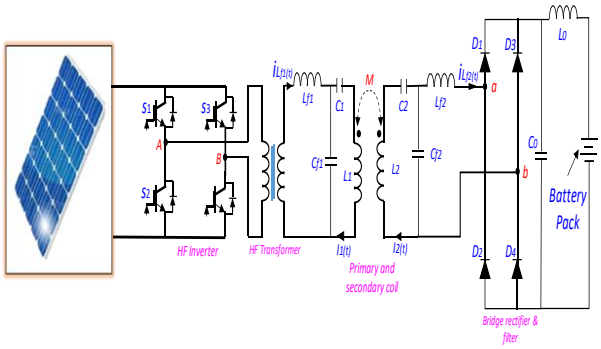

Fig.2 Circuit diagram of wireless battery charger

We are using solar panel from which we can get direct DC. The output from solar panel (DC) is converter into AC by using High Frequency (HF) inverter. The HF inverter Convert DC to High frequency AC whose frequency range is in KHz. High frequency transformer is used in order to transmit constant power across the wireless pads. The air gap between primary and secondary coil is 150mm. Here we are using LCC compensation on SS (series-series) Topology which give higher efficiency as compare to other compensation method. Were Lf1, Cf1, C1 are the compensation devices at primary side and Lf2, CF2, C2 are the compensation devices at secondary side. AC output that fed from secondary coil is converted into DC by using rectifier. The DC output is used to store in battery.

II. PROPOSED COIL DESIGN

The New coil design is shown in fig 3. As shown in fig each coil has 2 square shaped coils joined together and 8 adjoining circular coil are surrounded by square coil which splitted in two half (4 for 1 side and remaining 4 for another square shaped coil) Both the coils, primary and secondary have same design & diameter. The energy transfer concerning the primary and secondary coils changes with respect to shape and position of the coil .The FEA tool is employed to design verification of the planned structure .Thirdly, in order to discover out the influence of compensated coils with respect to position. An analysis software is employed to model the structure proposed. The circular coil diameter in 10cm and square coil diameter in 30 cm. The simulation results are shown fig 5,6,7,8,9,10,11.

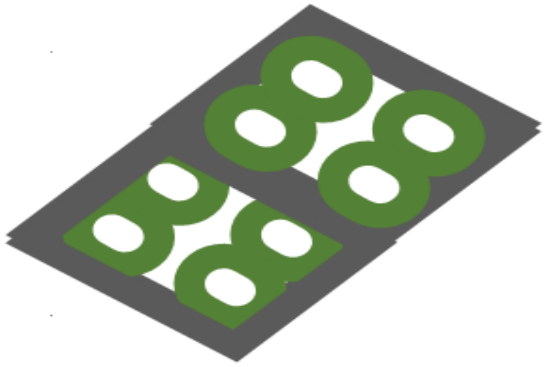

Fig.3 Proposed coil structure

III. EQUIVALENT CIRCUIT OF SERIES-SERIES INDUCTIVE POWER TRANSFER (WPT) SYSTEM

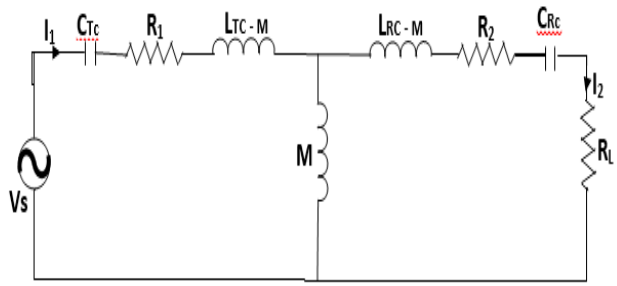

Fig.4 Circuit diagram of WPT system

$$\eta = \frac{Pout}{Pin}$$

Where,

The extent of coupling between charging coil & pick-up side coils is defined by coupling coefficient (K), is given by:

$$K = \frac{M}{\sqrt{LTc + LRc}}$$

The total impedance of the circuit for set parameters can be calculated. as:

$$Zss = \left(R1 + j\left(LTc\omega - \frac{1}{CTc\omega}\right)\right) + \left(\frac{\omega^2 M^2}{R2 + j\left(LRc\omega - \frac{1}{CRc\omega}\right) + RL}\right)$$

The amount of current used from the supply is given by:

$$I1 = \frac{Vs}{Zss}$$

$$I1 = \frac{Vs}{\left(R1 + j\left(LTc\omega - \frac{1}{CTc\omega}\right)\right) + \left(\frac{\omega^2 M^2}{R2 + j\left(LRc\omega - \frac{1}{CRc\omega}\right) + RL}\right)}$$

The power input can be obtained as:

$$Pin = \frac{Vs^2}{\left(R1 + \left(\frac{(2\pi f)^2 M^2}{R2 + RL}\right)\right)}$$

Likewise, the power output can be obtained as below:

$$Pout = \frac{Vs^2 (2\pi f)^2 M^2 RL}{\left(R1R2 + R1RL + ((2\pi f)^2 M^2)\right)^2}$$

IV. THE STIMULATION RESULTS

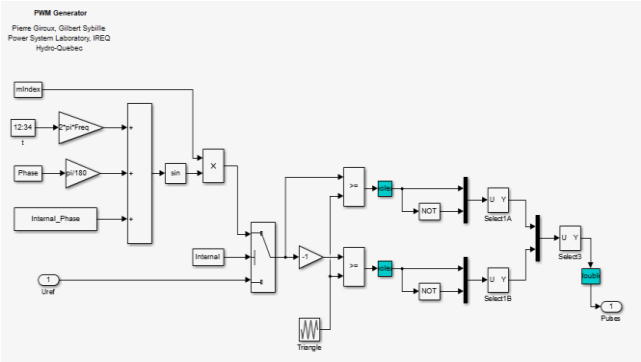

Fig.5 Array simulation diagram

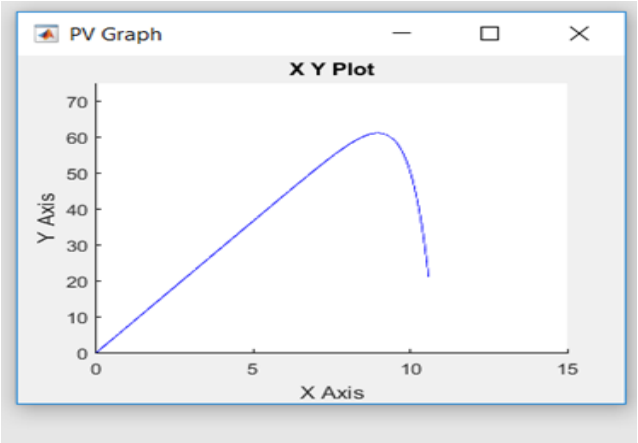

Fig.6 P-V Graph

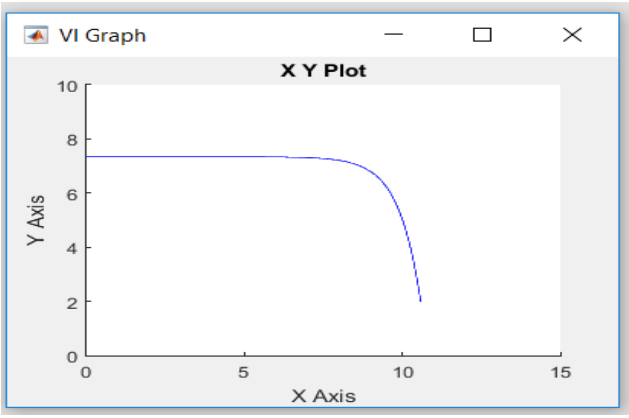

Fig.7 I-V Graph

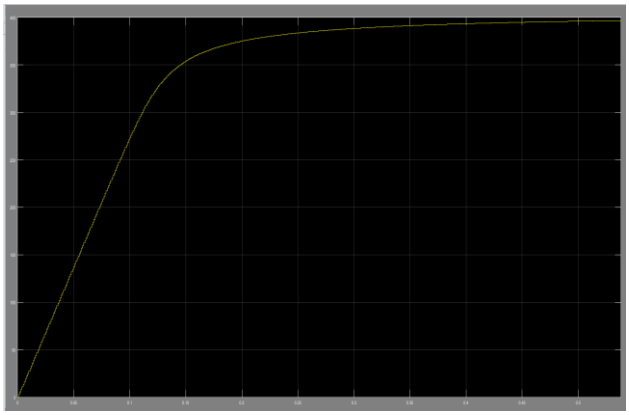

Fig.8 400V PV Array Output

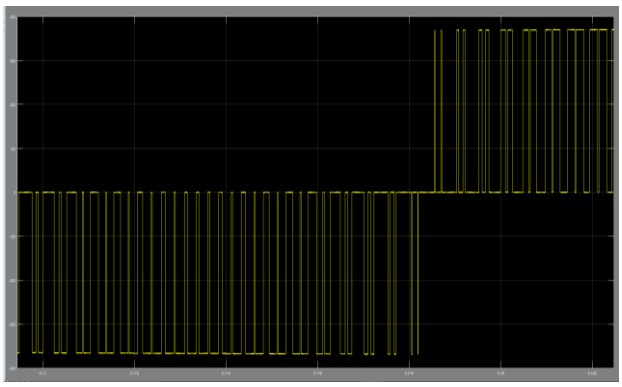

Fig.9 Inverter output voltage

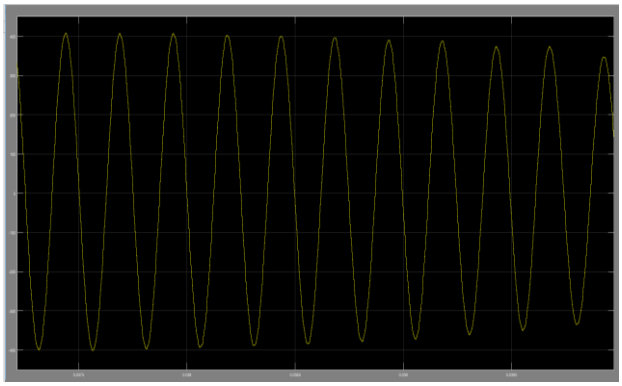

Fig.10 Recoil output voltage

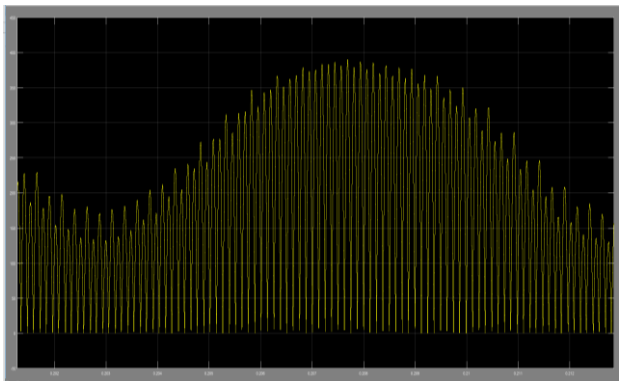

Fig.11 400v rectifier output.

V. RDWARE IMPLEMENTATION

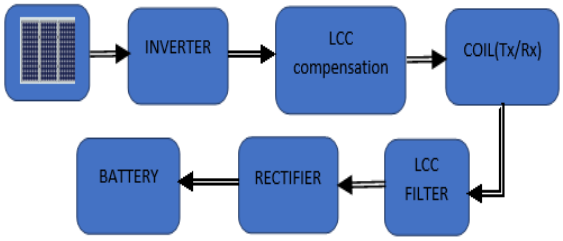

Fig.12 Block diagram of hardware implementation.

This design employs solar panel of a larger photovoltaic system. This installations contains several panels as the amount of power generated is limited in case of solar panels. We are then using switching devices like MOSFET to convert AC to DC (square waves), which is again converted back to DC by the process of rectification by high frequency technique. We are doing this to get compactness and to become economical. We have used IC SG3525. The pin diagram of IC SG3525 is shown in Fig.13.

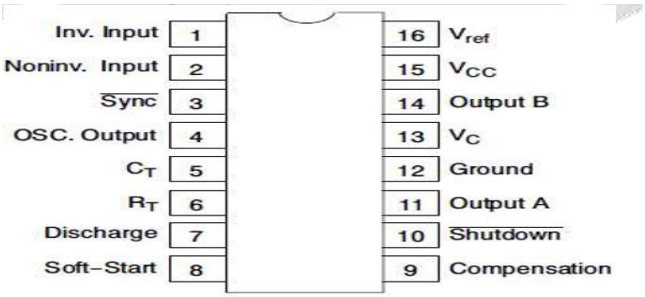

Fig.13 Pin Diagram of IC SG3525.

A. PROPOSED COMPENSATION TOPOLOGY

As an integrated LCC compensation topology comprises of two capacitors and one inductor, forms a structure analogous to an LCL-T network at both the (primary) transmitter and the (secondary) receiver sides. The additional coil (inductor) is integrated with the (transmitter coil or receiver coil) main coil on the identical side. Additional space for inductors are not needed since the additional coil and the main coil can be integrated.

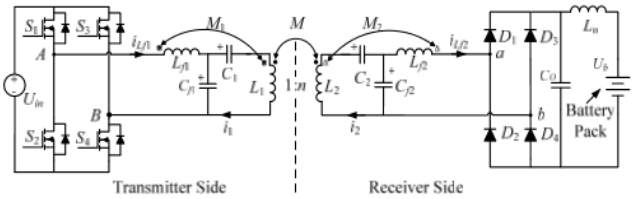

Fig.14 Proposed compensation topology.

In this proposed system the resonant frequency is independent of both load condition and coupling coefficient.

The presence of rectifier converts (AC) alternating current, which periodically reverses direction, to (DC) direct current, which flows only in single direction.

Rectifier are categorized in two namely:

1) Half wave rectifier
2) Full wave rectifier

In half-wave rectifier with single-phase supply, also known as uncontrolled one-pulse midpoint circuit. In this rectifier either the positive or negative half of the AC wave is passed, while the other half is obstructed. Mathematically,

$V_{rms} = V_{peak}/2 \quad V_{dc} = V_{peak}/\pi$

Where:

Vdc, Vav – DC voltage & average output voltage,

Vpeak, the peak value of the phase input voltages,

Vrms (RMS) value of output voltage.

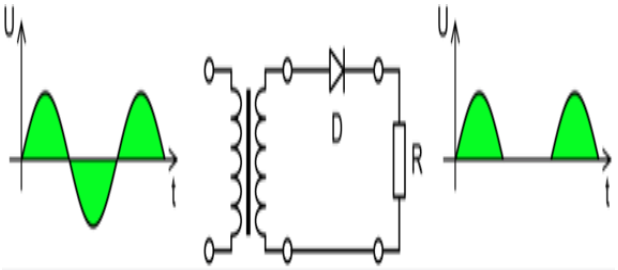

Fig.15 Half wave Rectifier

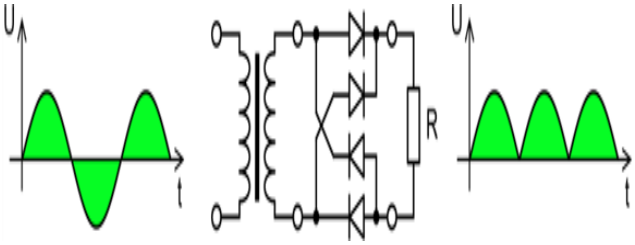

Fig.16 Full wave rectifier

B. BATTERY

An electric battery was incorporated in the system to power the circuit. It involves of one or more electrochemical cells that transform the chemical energy stored into electrical energy. The cells consists a cathode, and anode.

Fig.17 Hardware Assembly.

C. HARDWARE DISCRIPTION (Prototype Description)

The proposed design employs the use of solar panel with a huge photovoltaic system to generate and supply electrical energy. In this project we are using 10w solar panel with maximum output voltage 18 v and current 0.58A.

Fig.18. 10W Solar Panel

D. INVERTER

We then used an Inverter for getting Power from power supply unit. The IRF840 MOSFET switch is used in our Hardware. During the avalanche mode of operation the N-Channel enhancement mode silicon gate power field effect transistor is an advanced power MOSFET tested, designed, and guaranteed to withstand a specified level of energy.

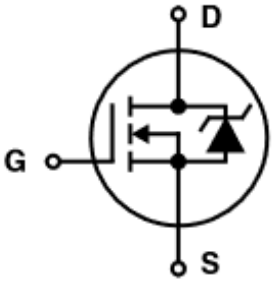

Fig .19. IRF840 symbol

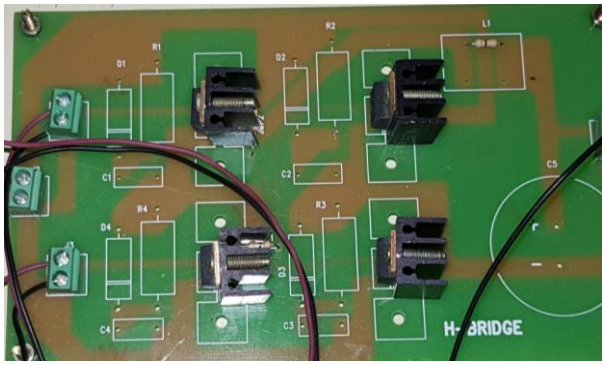

Fig. 20 Inverter with IRF840 MOSFET

E. PULSE GENERATOR DSPIC33F

Here we are using DSPIC33F IC as a pulse generator for Inverter. Pin diagram of DSPIC33F is shown in Fig.21 DSPIC33F is employed for 16-bit MCU embedded application. This is used to vary pulse range for MOSFET used in inverter circuit.

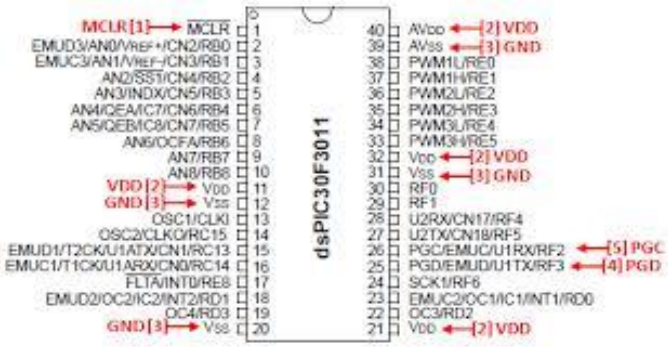

Fig. 21 Pin diagram of DSPIC33F IC

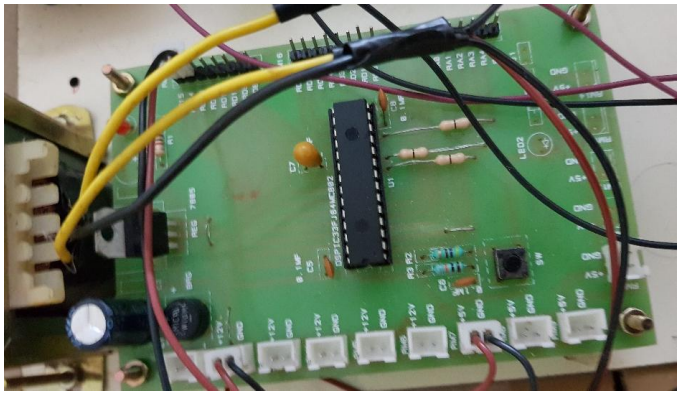

Fig. 22. Pulse generator for Mosfet

F. DRIVER CIRCUIT

The IRS2110/IRS2113 has high speed, power and Voltage. The IGBT drivers has an independent high and low side referenced output channels. Proprietary HVIC and latch immune CMOS technologies enable ruggedized monolithic construction. Logic inputs are compatible with standard CMOS or LSTTL output, down to 3.3 V logic. The output drivers feature a high pulse current buffer stage designed for minimum driver cross-conduction. Propagation delays are matched to simplify use in high frequency applications. The floating channel can be used to drive an N-channel power MOSFET or IGBT which operates up to 500 V or 600 V.

Fig. 23. Pin Diagram of IRS2110 Driver Circuit

G. TRANSMITTER COIL /RECEIVING COIL

The image of Transmission and receiving coil is shown in Figure 24.We just wounded both the coils in the form of double QDQ structure and additional compensated winding was placed in center.

Fig. 24. Transmission and receiving coil

H. BATTERY POWER

As this Hardware is prototype model we are using 12 voltage researchable battery used at the receiving side. The voltage output from the receiving coil is again converted into DC and fed into Battery.

Fig. 25. Rechargeable battery

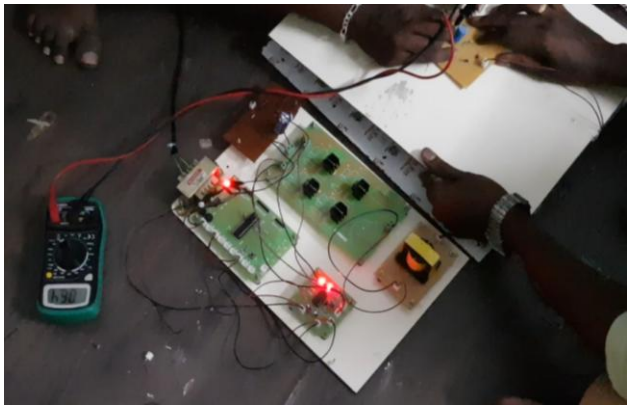

Fig. 26. Voltage before misalignment

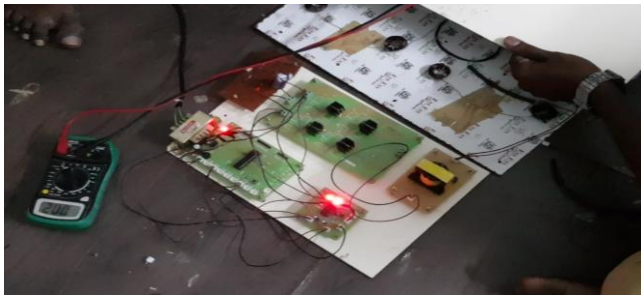

Fig. 27. Voltage after misalignment

VI. CONCLUSION

Thus, the Implementation of improved Wireless battery charger for electrical vehicle has been simulated with help of MATLAB and designed a hardware kit successfully. A new topology of coil design was proposed in order to achieve High misalignment tolerance. It aims to reduce coil size and to achieve better efficiency at misalignment state. Thus, the installation shape and cost were reduced by reducing coil size. solar panel was replacing grid setup by which we can able to reduce grid line extension cost for India .so instead of getting power from grid, charging station will use solar panel to transmit direct dc supply. Moreover, to resolve the problem of increasing efficacy at misalignment tolerance Series -series LCC compensation method was implement. High frequency inverter was used in order to transmit maximum frequency range to TX/RX coil.

REFERENCES

1. "A survey on power levels of battery charging and infrastructure for plug-in electric and hybrid vehicles" A Aswin and S Senthilmurugan 2018 IOP Conf. Ser.: Mater. Sci. Eng.402 012154.
2. "Compact and Efficient Bipolar Coupler for Wireless Power Chargers: Design and Analysis" Junjun Deng, Member, IEEE, Weihan Li, Student Member, IEEE, Trong-Duy Nguyen, Siqi Li, Member, IEEE, and Chris Mi, Fellow, IEEE Trans. Power Electron., vol.30, no.11, Nov. 2015.
3. S. Y. Choi, J. Huh, W. Y. Lee, and C. T. Rim, "Asymmetric coil sets for wireless stationary EV chargers with large lateral tolerance by dominant field analysis," IEEE Trans. Power Electron., vol. 29, no. 12, pp. 6406-6420, Dec. 2014.
4. N. Puqi, J. M. Miller, O. C. Onar, and C. P. White, "A compact wireless charging system for electric vehicles," in Proc. IEEE Energy Convers. Congr. Expo., 2013, pp. 3629-3634.
5. S. Li and C. Mi, "Wireless power transfer for electric vehicle applications," IEEE J. Emerg. Sel. Topics in Power Electron., to be published.
6. H. H. Wu, A. Gilchrist, K. D. Sealy, and D. Bronson, "A high efficiency 5 kW inductive charger for EVs using dual side control," IEEE Trans. Ind. Informat., vol. 8, no. 3, pp.585-595, Aug. 2012.
7. Budhia, M.; Covic, G.A.; Boys, J.T. Design and optimization of circular magnetic structures for lumped inductive power transfer systems. IEEE Trans. Power Electron. 2011, 26,3096–3108.
8. Kaneko, Y.; Abe, S. Technology trends of wireless power transfer systems for electric vehicle and plug-in hybrid electric vehicle. In Proceedings of the IEEE 10th International Conference on Power Electronics and Drive Systems, Kitakyushu, Japan, 22–25 April 2013.
9. Gao, Y.; Farley, K.B.; Tse, Z.T.H. A uniform voltage gain control for alignment robustness in wireless EV charging. Energies 2015, 8, 8355–8370.
10. Z. Pantic, S. Bai, and S. Lukic, "ZCS LCC-compensated resonant inverter for inductive-power-transfer application," IEEE Trans. Ind. Electron., vol. 58, no. 8, pp. 3500-3510, Aug. 2011.
11. M. Borage, S. Tiwari, and S. Kotaiah, "Analysis and design of an LCL-T resonant converter as a constant-current power supply," IEEE Trans. Ind. Electron., vol. 52, no. 6, pp. 1547-1554, Dec. 2005.

AUTHORS PROFILE

V.Kubendran, received his B.E. degree in Electronics and instrumentation engineering from Anna University, India in 2007.He received his M.E. degree in Power Electronics and Drives from SRM Institute of Science and Technology (formerly known as SRM University), 2010.He is currently pursuing Ph.D. in from B.S.Abdur Rahman Crescent Institute of Science and Technology, India. He is also an Assistant Professor in the Department of Electrical and Electronics Engineering in SRM Institute of Science and Technology, Kattankulathur, India. His research interests are Multilevel Inverter, Power Quality. He has also participated in many National and International Conferences and also published papers in many National and International Journals.

S.Senthilmurugan, received his diploma in Electrical and Electronics from Alagappa Polytechnic college Karaikudi .DOTE, Chennai, India in 2004. He received his B.E. degree in Electrical and Electronics Engineering from Alagapaa Chettiar College of Engineering and Technology, Karaikudi (Anna University), India in 2007.He received his M.E. degree in Control and Instrumentation Engineering from Anna University, India in 2010. He is currently pursuing Ph.D. in EEE from SRM Institute of Science of Technology, Kattankulathur, India. He is also an Assistant Professor in the Department of Electrical and Electronics Engineering in SRM Institute of Science and Technology, Kattankulathur, India. His research interests are Control Systems, Smart Grid, Virtual Instrumentation, Sensor and Networks. He has also participated in many National and International Conferences and also published papers in many National and International Journals.

A.Aswin is a Final year UG Student. He is currently studying B.Tech. EEE in SRM Institute of Science and Technology, Kattankulathur, India. He has also participated in many International Conferences and also published papers in many International Journals. His research interests are Smart grid, Electric vehicles, Wireless sensor networks, Biomedical.