Multi Directional Security System using Ultrasonic Sensor

T V Murali Krishna, Mohan Kumar D, Ashok Kumar Reddy K

***Abstract:** The main aim of this project is to provide high security in museums ,art galleries and banks with low cost. We will place ultrasonic sensor on top of the DC motor and the dc motor speed will be controlled by 8052 micro controller. The ultrasonic sensor gives the distance of the persons from the object. When any one tries enter in the security region then it will give the sound through buzzer.*

Keywords- Proteus, keil, Assembly Langauage.

I. INTRODUCTION

The main principle of ultrasonic sensor is RADAR .Acronym of RADAR is Radio Detection and Ranging. Generally RADAR consists of transmitter which emits electromagnetic waves if any object is in the same path then these waves will be reflected from the object and these waves will be detected by using received antenna .based on the waves velocity and time between transmission and reflection of the wave we can calculate the distance of the obstacle[1-2] .Generally by using RADAR we can detect Aircrafts,ships,guided missiles distance from the earth.

II. SYSTEM ARCHITECTURE

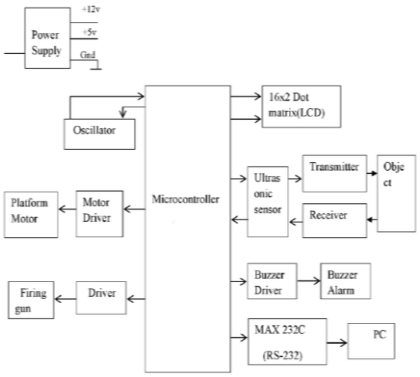

Fig.1 Block Diagram of Proposed system

Here we have used a 12-0-12V, 750mA, Step down transformer for reducing voltage from 230V to 12V. This step downed AC voltage is converted into D.C by using a full wave rectifier with the help of 1N4007 diodes and 2200 µF/25V capacitor. As we know, the D.C voltage is √ 2 times of 12V A.C, i.e. 16.8V D.C. Further this voltage is converted into a regulated power supply by a constant voltage regulator LM7805 into 5V. This 5V is given to the logic sections of the circuit[3].

To avoid the ripple factor caused by the fluctuations in the drawn current by the kit, we placed a 470 µF/16V capacitor in the output of the 7805.Here we have used AT89C52 micro controller to serve the entire application. Here we have applied Ground to pin20 and 5V to pin40. The EA pin (pin 31) is tied to VCC in order to disable the PC from accessing the external memory, as we are using internal 8k bytes flash memory[4]. The crystal oscillator is connected to XTL1 and XTL2 pins (pins18, 19) of micro controller. It is running at a speed of 11.0592 MHz frequency.

The Rest Logic is applied to the pin no.9 of micro controller with the help of a RC network of 8.2k and 10µF respectively. The values are selected by the time delay given by the manufacturer. When the kit is powered on, at the time T=0 sec the capacitor acts as a short circuit and the RST pin is maintained at logic high. After a few milliseconds, the capacitor slowly charges then the voltage across the resistor comes to zero applying a logic zero to RST pin[5].

This transient from 5V to 0V is applied to the micro controller which generates a reset pulse that is connected to all internal blocks of micro controller. At this situation the program counter is pointed to starting address of internal program memory i.e. 0000H.

We have connected a 10k Pull-up resistor to port ‘0’ from VCC because of open drain port. In the same manner we have connected 10kΩ Pull up resistors for all other ports for increasing driving currents of port pins. In the circuit we have used a 16x2 DOT MATRIX LCD DISPLAY. It has 16 pins. Power supply pins are VCC,VSS and to control LCD contrast VEE is used. The LCD is having two registers inside it. They are 1) Instruction register and 2) Data register. The purpose of RS pin is

When RS=0, it is LCD command mode and if RS=1 is Data mode, allows the user to send data which is to be displayed on LCD. R/W is a read/write pin, which says about the read or write the data from LCD. When R/W=1 reading data from LCD and when R/W=0 writing the data to LCD. The LCD to latch information presented to its data pins uses the enable (E) pin. Pins D0-D7 are used to exchange the date between controller and LCD. Software Connections: By using proteus we make all the necessary connections for the project. Programming language used is assembly language .after writing the program in Keil We have to take HEX file and we have to upload that hex file to the controller part is Proteus. Then we can observe the simulation outputs in Proteus.

Revised Manuscript Received on Febaruary 11, 2019.

T V Murali Krishna, Assistant Professor, Department of ECE, Vignan’s Foundation for Science, Technology and Research, Vadlamudi, Guntur, A.P, India 522213 (Email: thokalamurali2010@gmail.com)

Mohan Kumar D, Assistant Professor, Department of ECE, Vignan’s Foundation for Science, Technology and Research, Vadlamudi, Guntur, A.P, India 522213

Ashok Kumar Reddy K, Assistant Professor, Department of ECE, Vignan’s Foundation for Science, Technology and Research, Vadlamudi, Guntur, A.P, India 522213

Published By:
Blue Eyes Intelligence Engineering
& Sciences Publication

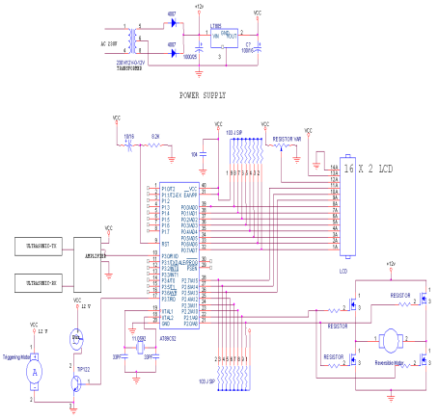

III. HARDWARE WORKING

After making the connections as per the circuit diagram the following steps will be executed continuously. code we have to write in Keil IDE and generate HEX file for the given program. After giving the power supply from the socket the power will be pull-down to 5V which is required for 8052. The program starts execution by 8052 by using program counter and registers of 8052.The motor will rotate continuously with low speed, the sensor and gun are placed on the DC motor.

Ultrasonic sensor will share the data to the 8052 continuously and by using the code we are going to calculate distance of the object. This distance will be displayed in the LCD continuously .The distance which is given from ultrasonic sensor will compare with the threshold level. If this distance reaches below threshold voltage then microcontroller will triggers buzzer and if requires gun .but triggering of gun part is danger to execute as project.so we used led to show triggering of gun.

Microcontroller Dumping Processor

1. Write a program in text file & save it with .asm file and compile it with keil compiler with a command 1 filename.
2. The compiler will generate .obj file & it invokes linker as
3. Then the linker will generate .hex file and a .map file as shown.
4. Then start µc flash programming utility...

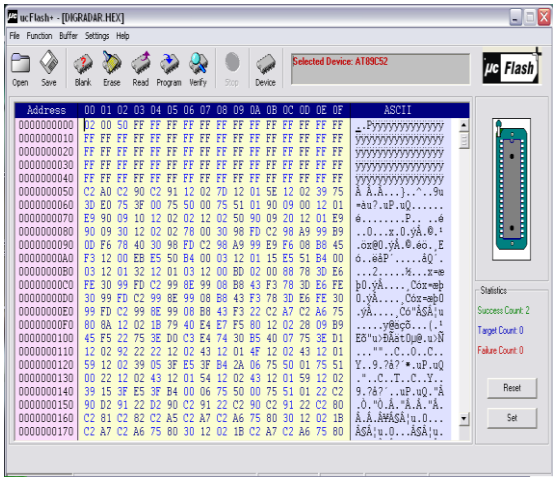

5. Select the type of microcontroller.

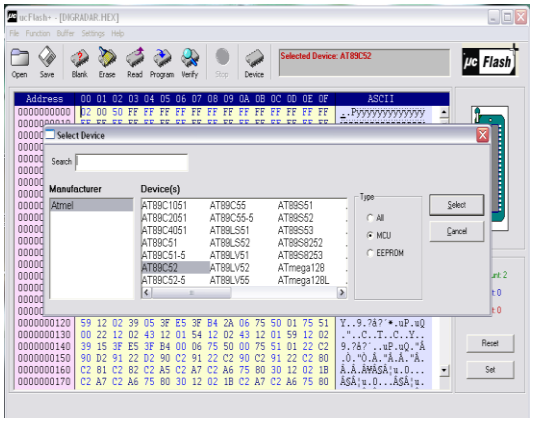

6. Then select the .hex file...

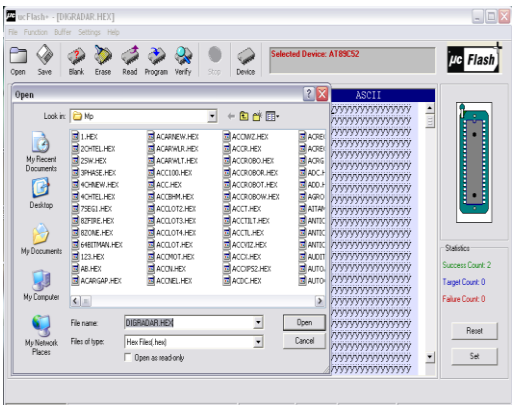

7. Hex file will be loaded into buffer of software.

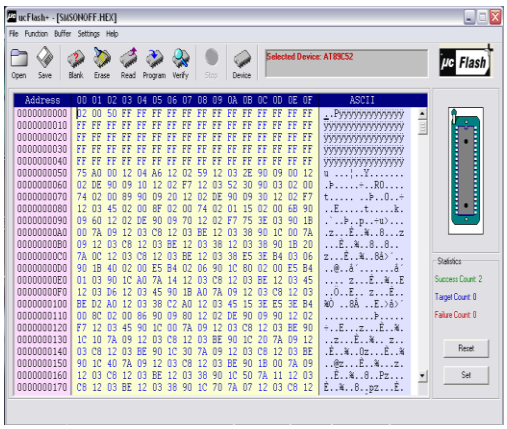

8. Now click on program to dump the microcontroller.

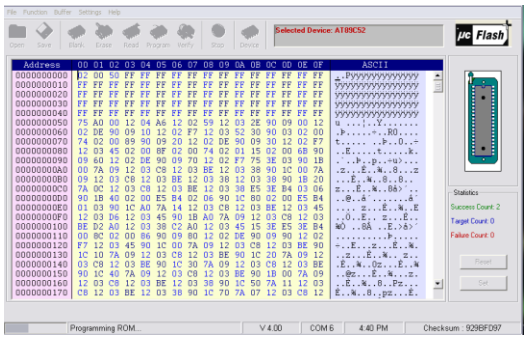

Published By:
Blue Eyes Intelligence Engineering
& Sciences Publication

9. Now it is successfully after verification and blank check.

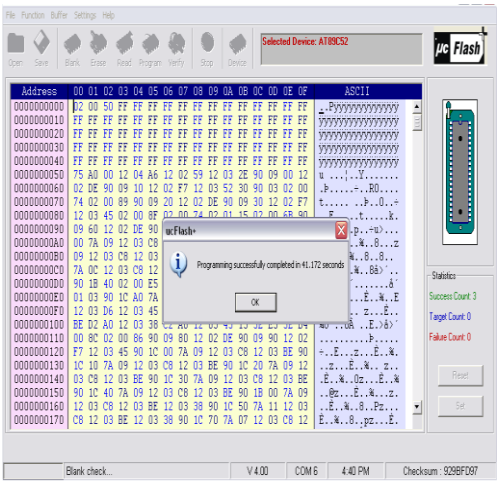

IV. RESULT

The output is observed on the LCD screen that is interfaced to the microcontroller and the result of the project is as follows:

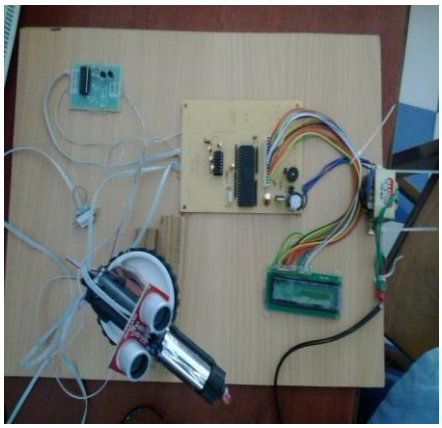

Figure 6.1: Initially when power is OFF

Initially the power is OFF and after the power is supplied to it the kit is shown below

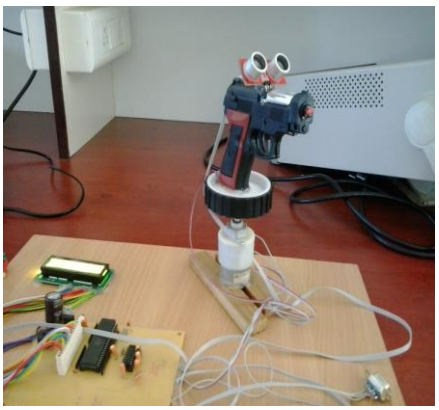

Figure 6.2: When Power is ON

When power is ON the Ultrasonic sensor becomes ON and by using Firing Gun the Ultrasonic sensor is used to fire at particular distances and is shown below.

Figure 6.3: Firing Gun detecting an object and shooting

By using Ultrasonic Sensor the signals are sent and received and using LCD the distance at which the object is present is displayed on it and is shown below.

Figure 6.4: Displaying the distance at which object is present

When an object is Out of the ultrasonic sensor range the message displayed on the LCD is as follows.

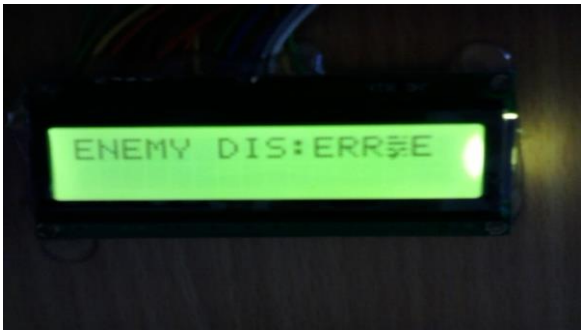

Figure 6.5: Displaying an output on LCD

V. CONCLUSION

The aim of our project is to provide security and safety from unauthorized areas in case of someone robbing a Precious items displayed in the Museum and also security to People in Borders. So finally we are concluding that this project is used to provide security, safety and alerting system for Army People as well as to the security members in the Museum. Here we are using only one sensor to detect distance of persons around object .we can increase number of sensors to increase coverage area and to provide more security.

Published By:
Blue Eyes Intelligence Engineering
& Sciences Publication

REFERENCES

1. Ardalan Vahidi and Azim Eskandarian, "Research Advances in Intelligent Collision Avoidance and Adaptive Cruise Control", IEEE TRANSACTIONS ON INTELLIGENT TRANSPORTATION SYSTEMS, VOL. 4, NO. 3, SEPTEMBER 2003, pp 143-153.
2. Review of National Automated Highway Research Program, 1998.
3. Tarak Gandhi and Mohan M. Trivedi, "Pedestrian Collision Avoidance Systems: A Survey of Computer Vision Based Recent Studies", Proceedings of the IEEE ITSC 2006, 2006 IEEE Intelligent Transportation Systems Conference, Toronto, Canada, September 17-20, 2006.
4. Dmitriy Grammatik, "A High-resolution radar system modeling with MATLAB/SIMULINK", Miami University (Oxford, Ohio) Department of Electrical & Computer Engineering.
5. Hiroshi Kondoh, "Fully-MMIC 76GHz Radar for ACC", 2000 IEEE Intelligent Transportation Systems Conference Proceedings, Dearborn (MI), USA Octoberl-3, 2000, pp-299-304.

Published By:
Blue Eyes Intelligence Engineering
& Sciences Publication