IOT based Interactive Industrial Energy Management System and Emergency Alert Using SMS & E-Mail

G. Rama Krishnaprabu, G. Ramkumar, M. Jagadeesh, E. Senthilkumar, P. Ashok Kumar

Abstract--- ***A hybrid energy system is a system that consists of two or more alternative energy sources (ex: solar and wind). In a modern industrial application that energy source can be utilized for the control application for real-time power system stabilization. The entire monitoring and control progress of the industrial utilities is an appropriate improvement in the industrial growth system. Here, the various industrial parameters are taken up for control such as gas, fire, machine, motor, in embedded based control. Solar, wind-based renewable power plant energy is stored in Battery. The Diesel generator is a backup sources Hybrid controller to implement the energy sources changeover logic based on optimal energy management strategy. The controller establishes an Automatic mode of operation in the hybrid controller for machine and motor power changeover operations. In this module, the fire and gas sensor will analyze its set range variation by the controller. If it exceeds it pre-defined values set in the controller the immediate indication and alert is arrived for to take necessary safety precaution and control in real time application. In industrial progress, the machine and motor are valuable sources for operating different load condition. Some mix-constrain load machine will be a failure. This effect will be rectified in this scheme through load analysis. The power control circuit provides a constant source depends upon load changes. All these variations will be monitored and control by IOT.***

Keywords--- ***Hybrid Energy, Monitoring, Embedded, Safety precaution, Load Analysis, IOT.***

1. INTRODUCTION

Hybrid renewable energy systems such as wind and solar are receiving national and worldwide attention due to the rising rate of utilization of fossil and nuclear fuels. The coupling of solar energy, hydro energy and wind may provide continuous power supply as long as the hybrid power meets the power demand. However, the hybrid power is highly depending on weather variations and is not able to meet the constant power requirement. When the hybrid power is insufficient in meeting the load, the main power supply can satisfy the requirement. The basic concept behind the proposed hybrid energy system is that renewable energy sources like the wind system, solar system, and hydro system are made as preferred single source by using coupled inductances in the DC-DC converter, and other complementary sources like Utility power and battery are connected to the D.C bus at the source side, and an inverter is connected between load and D. C bus. PWM method is used to control the duty cycles of DC/DC converters to achieve the maximum power to satisfy the load demand. In this paper, solar, hydro and wind proposed hybrid system will be developed for a self-supporting home application. The proposed design is a joining of the CUK and SEPIC converters. The converter receives input supply directly from the natural resources, and it can be done the step-up/down operations automatically based on the switching action of the MOSFET.

2. LITERATURE REVIEW

Renewable energy technologies offer perfect, plentiful energy sources assembled from self-recharging assets, for example, the sun, wind, and so on. As the power request expands, control disappointment additionally increments. In this way, Renewable power sources can be utilized to give steady loads. Another converter topology for half and half breeze/photovoltaic vitality framework is proposed. Hybridizing sunlight based and wind control sources provide a reasonable type of intensity of power generation. The topology utilizes a combination of CUK and SEPIC converters. This arrangement enables the two sources to supply the load independently or at the same time contingent upon the accessibility of the vitality sources. Recreation is completed in MATLAB/SIMULINK programming, and the consequences of the CUK converter, SEPIC converter, and the hybridized converter are displayed. Late advancements and patterns in the electric power utilization show expanding utilization of sustainable power source. All areas of the world have inexhaustible assets of some sort. Starting here of view thinks about on sustainable power sources concentrates consideration increasingly. Sun-powered vitality and wind vitality are the two sustainable power sources most basic being used.

Revised Version Manuscript Received on 01 February, 2019.

G. Rama Krishnaprabu, M.E., (Ph.D), Associate Professor, Department of Electrical and Electronics Engineering, Vinayaka Mission's Kirupananda Variyar Engineering College, Vinayaka Mission's Research Foundation (Deemed To Be University), Salem, Tamilnadu, India. (e-mail: krishprabugovind@gmail.com)

G. Ramkumar, PG Scholar, M.E – Power Systems Engineering, Department of Electrical and Electronics Engineering, Vinayaka Mission's Kirupananda Variyar Engineering College, Vinayaka Mission's Research Foundation (Deemed To Be University), Salem, Tamilnadu, India.

M. Jagadeesh, PG Scholar, M.E – Power Systems Engineering, Department of Electrical and Electronics Engineering, Vinayaka Mission's Kirupananda Variyar Engineering College, Vinayaka Mission's Research Foundation (Deemed To Be University), Salem, Tamilnadu, India.

E. Senthilkumar, PG Scholar, M.E – Power Systems Engineering, Department of Electrical and Electronics Engineering, Vinayaka Mission's Kirupananda Variyar Engineering College, Vinayaka Mission's Research Foundation (Deemed To Be University), Salem, Tamilnadu, India.

P. Ashok Kumar, PG Scholar, M.E – Power Systems Engineering, Department of Electrical and Electronics Engineering, Vinayaka Mission's Kirupananda Variyar Engineering College, Vinayaka Mission's Research Foundation (Deemed To Be University), Salem, Tamilnadu, India.

Published By:
Blue Eyes Intelligence Engineering
& Sciences Publication

Wind vitality has turned into the slightest costly sustainable power source innovation in the presence and has created the enthusiasm of researchers and teachers over the world. Photovoltaic cells change over the vitality from daylight into DC power. PVs offer included points of interest over other sustainable power sources in that they radiate no commotion and require basically no upkeep. Hybridizing sunlight based and wind control sources give a sensible type of intensity age. Numerous investigations have been done on the utilization of renewable power sources and generation, and numerous papers were exhibited before. The breeze and sunlight based vitality frameworks are profoundly questionable because of their unusual nature. In a PV board was consolidated with a diesel-electric power framework to examine the decrease in the fuel devoured. It was seen that the consolidation of an extra sustainable source could further reduce the fuel consumption. When a source is unavailable or insufficient in meeting the load demands, the other energy source can compensate for the difference. Several hybrid wind/PV power systems with Maximum Power Point Tracking (MPPT) control have been proposed earlier. They used a separate DC/DC buck and buck-boost converter connected infusion in the rectifier stage to play out the MPPT control for every one of the sustainable power source control sources. These systems have an issue that, because of the environmental elements affecting the wind turbine generator, high-frequency current harmonics are injected into it. Buck and buck-boost converters cannot eliminate these harmonics. So the system requires passive input filters to remove it, making the system more bulky and expensive. In this work, another converter topology for hybridizing the wind and sunlight based vitality sources has been proposed. In this topology, both wind and sun oriented vitality sources are fused together utilizing a mix of CUK and SEPIC converters, so that on the off chance that one of them is inaccessible, at that point the other source can make up for it. The CUK-SEPIC combined converters have the ability to dispose of the HF current sounds in the breeze generator. This eliminates the need for passive input filters in the system. These converters can support step up and step down operations for each renewable energy sources. They can also support individual and simultaneous operations. The sun-powered vitality source is the contribution to the CUK converter, and wind vitality source is the contribution to the SEPIC converter. The average output voltage created by the system will be the entirety of the contributions of this two system. Every one of these favorable circumstances of the proposed cross breed framework makes it very productive and reliable.

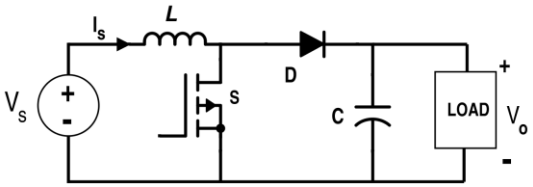

Fig. 1: CUK converter

3. PROPOSED METHOD

The goal of this method to undertaking the industrial automation control and safety for the multi power-connected hybrid photovoltaic (PV)/wind power system in order to simplify the power system and reduce the cost. The system consists of a boost converter fused multi-input dc-dc converter and a full bridge dc–ac inverter. The output power characteristics of the PV array and the wind turbine are introduced to measure its power production with the support of microcontroller to the industrial motor and machine control. The controller also analyzes fire range and gas sensor range if it pre-defined value exceeds the alarm will indicate. The perturbation and observation method is used to accomplish the maximum power point tracking algorithm for input sources. The operational principle of the proposed industrial power control and its safety explained. The control circuit is realized by using a digital signal processor and auxiliary analog circuits. For practical applications, functions of circuit protection are implemented. Experimental results have shown the performance of the proposed module is monitored, and control by IOT desired features.

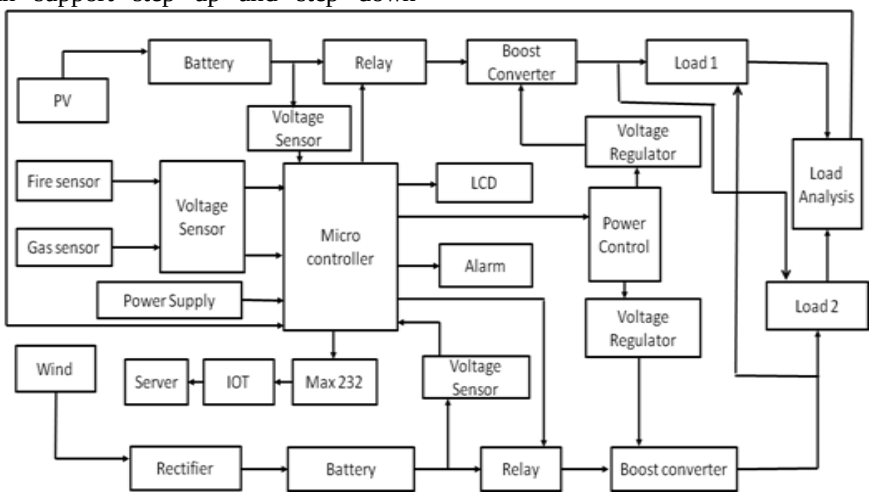

Fig. 2: Block Diagram

Published By:
Blue Eyes Intelligence Engineering
& Sciences Publication

3.1 Block Diagram Description

The block diagram represents the industrial machine control, monitoring, the safety precaution. Hybrid source of the system will measure the microcontroller for energy distribution. In this module, the fire and gas sensor will analyze its range variation. If it exceeds it pre-defined values set in the microcontroller. In industrial progress, the machine and motor are valuable sources for operating different load condition. Some mix-constrain load machine will be a failure. This effect will be rectified in this project through load analysis. The power control circuit provides constant source depends upon load changes. All these variations will be monitored and control by IOT. The operating ranges and the alert message will display in LCD.

3.2 Microcontroller (16F877A)

Peripheral Interface Controller (PIC) is microcontroller created by Microchip; PIC microcontroller is quick and simple to execute a program when we think about different microcontrollers like 8051. The simplicity of programming and simple to interfacing with different peripherals PIC wound up fruitful microcontroller. We realize that the microcontroller is an integrated chip which consists of RAM, ROM, CPU, TIMERS, and COUNTERS, etc. PIC is a microcontroller which also consists of RAM, ROM, CPU, timers, counter, ADC (analog to digital converters), DAC (digital to analog converter). PIC also supports the protocols like CAN, SPI, UART for interfacing with other peripherals. PIC mainly used modified Harvard architecture and also supports RISC (Reduced Instruction Set Computer) by the above specification RISC and Harvard we can see easily that PIC is faster than the 8051 based controller which is made-up of Von-Newman architecture.

3.2.1 PIC16F877A Introduction

The PIC microcontroller PIC16F877A is a standout amongst the most prestigious microcontrollers in the business. This controller is exceptionally advantageous to utilize, the coding or programming of this controller is additionally less demanding. One of the principle preferences is that it can be composed delete whatever number circumstances as would be prudent in light of the fact that it utilizes streak memory innovation. it has an aggregate number of 40 pins, and there are 33 pins for information and yield. PIC16F877A is utilized as a part of numerous PIC microcontroller ventures. PIC16F877A additionally have numerous applications in feature gadgets circuits**.** PIC16F877A discovers its applications in countless. it is used as a part of remote sensors, security and wellbeing gadgets, home computerization and in numerous mechanical instruments. an EEPROM is likewise included in it which makes it conceivable to store a portion of the data for all time like transmitter codes and beneficiary frequencies and some other related data. The cost of this controller is low, and its taking care of is likewise simple. its adaptable and can be utilized as a part of zones where microcontrollers have never been utilized as in coprocessor applications and clock capacities and so on.

3.2.2 Pin Configuration and Description of PIC16F877A

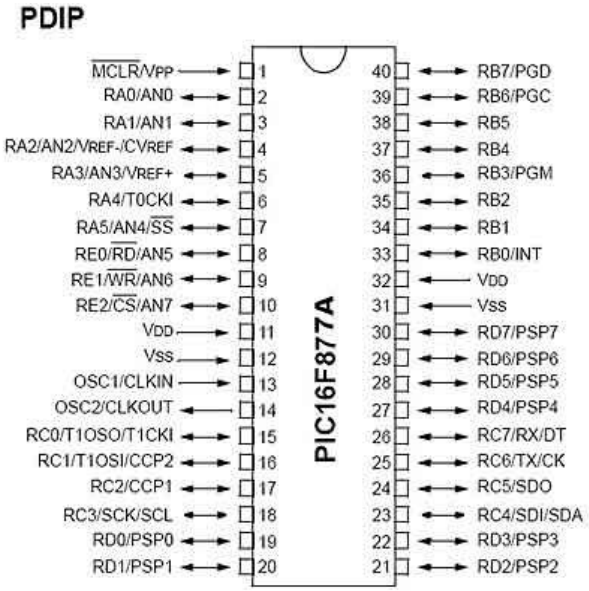

Fig. 3: Pin Configuration of PIC16F877A

3.3 LCD Display

The LCD screen is an electronic show module and finds an extensive variety of utilization. A 16x2 LCD show is an exceptionally essential module and is usually utilized as a part of different devices and circuits. These modules are favored more than seven segment and other multi-segment LEDs. The reasons being: LCDs are economical; easily programmable; have no limitation of displaying special & even custom characters (unlike in seven segments), animations and so on. A 16x2 LCD means it can display 16 characters per line and there are two such lines. In this LCD each character is shown in the 5x7 pixel system. This LCD has two registers, to be specific, Command and Data. LCD screens have supplanted substantial, massive cathode beam tube (CRT) shows in about all applications. LCD screens are accessible in a more extensive scope of screen sizes than CRT and plasma shows, with LCD screens accessible in sizes running from little-computerized watches to enormous, extra large flat screen TV sets.

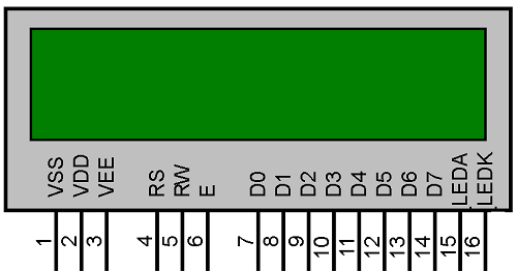

Fig. 4: LCD

3.4 Fire Sensor

A fire detector is a sensor intended to distinguish and react to the nearness of a fire or fire, permitting fire detection. Reactions to a recognized fire rely upon the establishment, however, can incorporate sounding an alert, deactivating a fuel line, (for example, propane or a gaseous petrol line), and enacting a fire concealment system.

Published By:
Blue Eyes Intelligence Engineering
& Sciences Publication

At the point when utilized as a part of uses, for example, mechanical heaters, their part is to give affirmation that the heater is appropriately lit; in these cases, they make no immediate move past informing the administrator or control framework. A fire indicator can frequently react speedier and more precisely than a smoke or warmth identifier because of the components it uses to identify the fire.

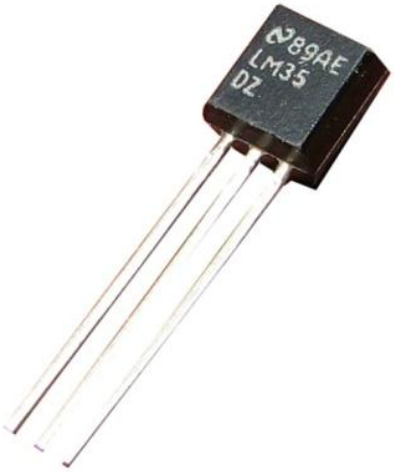

Fig. 5: Fire Sensor

3.5 Gas Sensor

A gas detector is a gadget that distinguishes the nearness of gases in a region, frequently as a component of a good being system. This kind of gear is utilized to recognize a gas spill or different outflows and would interface be able to with a control system so a procedure can be naturally closed down. A gas indicator can sound a caution to administrators in the zone where the break is happening, giving them the modified to clear out. This kind of gadget is imperative on the grounds that various gases can be destructive to natural life, for example, people or creatures. Gas finders can be utilized to identify ignitable, combustible and poisonous gases and oxygen consumption. This sort of gadget is utilized broadly in the industry and can be found in areas, for example, on oil rigs, to screen fabricate forms and developing advances, for example, photovoltaic. They might be used as a part of firefighting. Gas spill location is the way toward distinguishing conceivably risky gas spills by sensors. These sensors more often than not utilize a capable of being heard caution to alarm individuals when a hazardous gas has been distinguished. Presentation to dangerous gases can likewise happen in activities, for example, painting, fumigation, fuel filling, development, uncovering of polluted soils, landfill tasks, entering restricted spaces, and so forth. Normal sensors incorporate burnable gas sensors, photo ionization indicators, infrared point sensors, ultrasonic sensors, electrochemical gas sensors, and semiconductor sensors. All the more starting late, infrared imaging sensors have come into use. These sensors are used for a broad assortment of utilization and can be found in mechanical plants, refineries, pharmaceutical assembling, fumigation offices, paper mash factories, flying machine and shipbuilding offices, hazardous materials activities, squander water treatment offices, vehicles, indoor air quality testing and homes.

Fig. 6: Gas Sensor

3.6 Wind Energy

Wind control is the utilization of wind current through wind turbines to mechanically control generators for electric power. Twist control, as a contrasting option to consuming petroleum derivatives, is abundant, sustainable, generally appropriated, clean creates no ozone-harming substance emanations amid task, expends no water, and employment the little land. The energy effects on the environment are far minimized problematic than those of non-renewable power sources. Wind farms consist of many individual wind turbines which are connected to the electric power transmission network. Onshore wind is an inexpensive source of electrical control, aggressive with or in numerous spots less expensive than coal or gas plants. Seaward wind is steadier and more grounded than ashore, and seaward homesteads have a less visual effect, yet development and upkeep costs are impressively higher. Little coastal breeze ranches can sustain some vitality into the network or give electric capacity to detached off-matrix areas. Wind control gives the variable power which is exceptionally reliable from year to year yet which has a critical variety over shorter timescales. It is subsequently utilized as a part of conjunction with other electric power sources to give a solid supply. As the extent of twist control in a district expands, a need to overhaul the network and a brought capacity down to supplant regular generation can happen. Power administration procedures, for example, having abundance limit, geologically conveyed turbines, dispatchable sponsorship sources, adequate hydroelectric power, trading and bringing in capacity to neighboring zones, or diminishing interest when wind creation is low can, by and large, conquer these issues. Also, climate anticipating licenses the electric power system to be prepared for the anticipated varieties underway that happen.

Fig. 7: Wind Energy

Published By:
Blue Eyes Intelligence Engineering
& Sciences Publication

3.7 Solar Energy

Sunlight based vitality is brilliant light and warmth from the Sun that is saddled utilizing a scope of consistently advancing advances, for example, sun-based warming, photovoltaic, sun-oriented warm vitality, sun-based power plants and counterfeit photosynthesis. It is a critical wellspring of the sustainable power source, and its innovations are extensively described as either uninvolved sun-powered or dynamic sunlight based relying upon how they catch and appropriate sun-powered vitality or change over it into sun based power. Dynamic sun oriented strategies incorporate the utilization of photovoltaic frameworks, concentrated sunlight based power, and solar powered water warming to saddle the vitality. Detached sun-powered systems incorporate situating a working to the Sun, choosing materials with ideal warm mass or light-scattering properties, and outlining spaces that normally course air.

Fig. 8: Solar Energy

3.8 Voltage Sensor

In voltage sensors, the estimation depends on the voltage divider. Mostly two writes are of voltage sensors are accessible Capacitive compose voltage sensor and Resistive compose voltage sensor.

Fig. 9: Voltage Sensor

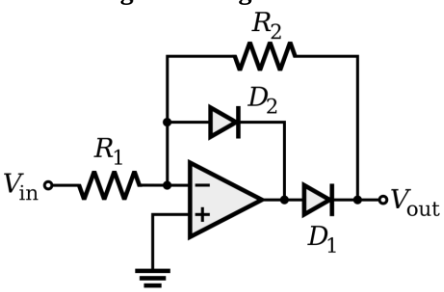

Fig. 10: Voltage Sensor circuit

A source voltage is connected. The OP-AMP utilized as a comparator contrasts the info voltage and the reference level. In the event that it surpasses a specific reference level, the comparator yield goes high, and there is the opening up OP-AMP performs enhancement alongside subtraction activity. In the event that the intensity of a source voltage is not as much as the reference voltage, just the intensification activity is performed. The yield of the enhancer OP-AMP is acquired to bring down stages. The output of my advantage is the yields acquired from the comparator OP-AMPs. They together represent to a double number.

3.9 Power Control

Power control alludes to the way toward controlling the intensity of a transmitter to accomplish better correspondence flag or general nature of administration. It is fundamentally used to control the transmitting intensity of a device to achieve better performance.

Fig. 11: Variable Resistance

3.10 Relay

A transfer is an electrically worked switch. Numerous transfers utilize an electromagnet to work a switch mechanically. Anyway, other working models are similarly used, for instance, solid-state exchanges. Exchanges are used where it is critical to control a circuit by a different low-control flag, or where one flag must control a few circuits. The main transfers were utilized as a part of long separation broadcast circuits as speakers: they rehashed the flag rolling in from one circuit and re-transmitted it on another circuit. Transfers were utilized broadly in phone trades and early PCs to perform coherent activities. A sort of transfer that can deal with the high power required to control an electric motor or different loads specifically is known as a temporary worker. Attractive hooking transfers are utilized as a part of utilization where introduced on power ought not have the capacity to change the contacts. Attractive hooking transfers can have either single or double curls. On solitary coil devices, the transfer will work one way when control is connected with one extremity and will reset when the extremity is turned around. On double loop devices, when a polarized voltage is applied to the reset coil, the contacts will transition. AC controlled magnetic latch relays have single coils that employ steering diodes to differentiate between operate and reset commands.

Published By:
Blue Eyes Intelligence Engineering
& Sciences Publication

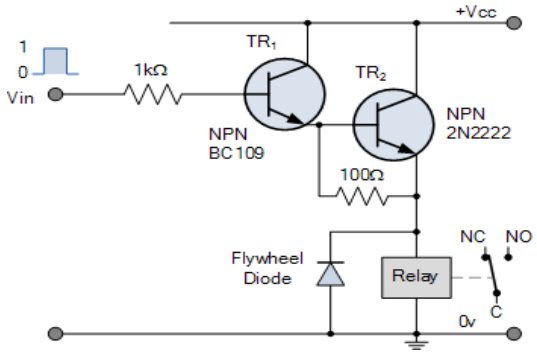

Fig. 12: Relay Circuit

A relay is an electrically worked switch. Numerous transfers utilize an electromagnet to work a switch mechanically. However other working standards are likewise utilized, for example, strong state transfers. Exchanges are used where it is vital to control a circuit by a different low-control flag, or where one flag must control a few circuits. The primary transfers were utilized as a part of long separation broadcast circuits as enhancers: they rehashed the flag rolling in from one circuit and re-transmitted it on another circuit. Transfers were utilized widely in phone trades and early PCs to perform intelligent tasks. A sort of relay that can deal with the high power required to control an electric Motor or different loads specifically is known as a temporary worker.

3.11 Boost Converters

A DC converter is an electronic circuit or electronic gadget that changes over a wellspring of the direct present (DC) starting with one voltage level then onto the next. It is a sort of electric power converter. Power levels go from low (little batteries) to (high-voltage control transmission).

A boost converter (step-up converter) is a DC-to-DC power converter that steps up the voltage from its input supply to its output load. Here cascaded dc-dc converter is used for improving the high efficiency of the circuit. A boost converter (boost up converter) is a DC-to-DC control converter that means up voltage (while venturing down current) from its information (supply) to its yield (stack). It is a class of switch mode control supply (SMPS) containing no less than two semiconductors (a diode and a transistor) and no short of what one imperativeness is storing segment: a capacitor, inductor, or the two in the mix. To decrease voltage swell, channels made of capacitors (here and there in the mix with inductors) are regularly added to such a converter's output (stack side channel) and info (supply-side channel).

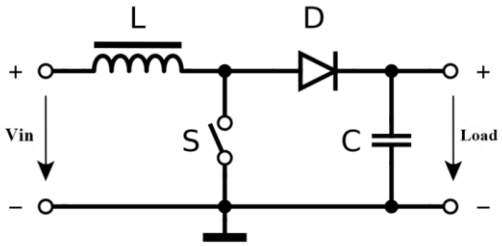

Fig. 13: A Simple Boost Converter Circuit

Power for the boost converter can originate from any appropriate DC sources, for example, batteries, sun based boards, rectifiers and DC generators. A procedure that progressions one DC voltage to an alternate DC voltage is called DC to DC transformation. A boost converter is a bi-directional converter with an output voltage more prominent than the source voltage. A lift converter is now and again rung a stage converter since it "ventures up" the source voltage. Since control (P=VI) must be conserved, the output current is lower than the source current. The essential standard of a Boost converter comprises of 2 particular states of operation.

- Continuous Mode
- Discontinuous Mode

Here the input DC electricity from the solar panel is fed into this boost converter so that it boosts the input voltage to the desired high voltage current that is to be given as input voltage to the grid. Since this converter is a switching device, it has the property to produce the noise and harmonics along with the boosted voltage. This, in turn, reduces the stability of the power system by causing some malfunction and power quality issues.

3.12 Battery

A battery changes over synthetic vitality into electrical vitality by a Chemical response. As a rule, the synthetic substances are kept inside the battery. It is used as a part of a circuit to control different segments. A battery creates Direct current (DC) (power that streams in a single heading and does not switch forward and backward). The power from an outlet in a building is less expensive and more productive. However, a battery can give power in territories that don't have electric power circulation. It is additionally valuable for things that move, for example, electric vehicles and mobiles telephones. Batteries might be essential or auxiliary. The essential is discarded when it can never again give power. The auxiliary can be energized and reused.

Batteries production in a wide range of shapes, sizes, and voltage. AA, AAA, C, and D cells, including antacid battery, have around 1.5 volts. The voltage of a cell relies upon the synthetic compounds utilized. The electric it can supply relies upon how vast the cell is, and in addition what synthetic concoctions. The charge a battery conveys is typically estimated in ampere-hours. Since the voltage remains the same, more charge implies a greater cell can supply more amps, or keep running for a more extended time.

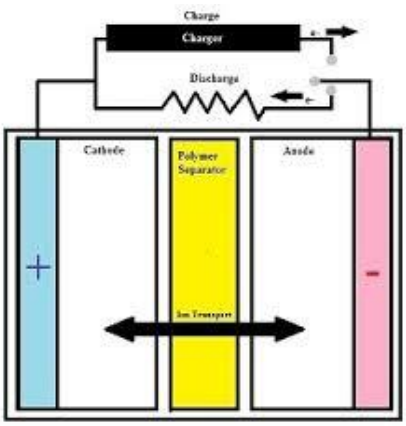

Fig. 14: Battery

Published By:
Blue Eyes Intelligence Engineering
& Sciences Publication

3.13 Motor

A DC motor is any of a class of turning electrical machines that believers coordinate current electrical vitality into mechanical vitality. The most widely recognized composers depend on the powers created by attractive fields. Almost a wide range of DC motor has some interior instrument, either electromechanical or electronic; to occasionally alter the course of the current stream in part of the Motor. DC motor was the main kind broadly utilized since existing direct-current lighting power circulation systems could control them. A DC motor's speed can be controlled over a wide range, utilizing either a variable supply voltage or by changing the quality os, toys, and appliances. The universal motor can operate on direct current but is a lightweight motor used for portable power tools and appliances. Larger DC motors are used in the impetus of electric vehicles, lift, and raises, or in drives for steel moving plants. The approach of intensity devices has made supplanting of DC motor with AC motor conceivable in numerous applications.

Fig. 15: DC Motor

3.14 IOT

The Internet of things (IOT) is the network of physical devices, vehicles, home appliances, and other items embedded with electronics, software, sensors, actuators, and connectivity which enables these objects to connect and exchange data. Each thing is uniquely identifiable through its embedded computing system but is able to inter-operate within the existing Internet infrastructure. The IoT enables items to be detected or controlled remotely crosswise over existing system foundation, making open doors for a more straightforward mix of the physical world into PC based system and bringing about enhanced proficiency, exactness and monetary advantage notwithstanding lessened human mediation. At the point when IOT is increased with sensors and actuators, the innovation turns into an occurrence of the more broad class of digital physical system, which additionally envelops advances, for example, savvy lattices, virtual power plants, brilliant homes, shrewd transportation and keen urban areas. "Things", in the IOT sense, can refer to a wide variety of devices such as heart monitoring implants, biochip transponders on farm animals, cameras streaming live feeds of wild animals in seaside waters, vehicles with worked in sensors, DNA examination devices for natural/sustenance/pathogen observing, or field task gadgets that help firefighters in pursuit and protect activities. Lawful researchers propose regarding "things" as an "inextricable mixture of hardware, software, data, and service." These devices collect useful data with the help of various existing technologies and then autonomously flow the data between other devices.

3.15 RS232

In telecommunications, RS-232, Recommended Standard 232 is a standard introduced for serial correspondence transmission of information. It formally characterizes the signs associating between a DTE (information terminal gear, for example, a workstation, and a DCE (information circuit-ending hardware or information correspondence gear, for example, a modem. The RS-232 standard had usually been utilized as a part of PC serial ports. The standard characterizes the electrical attributes and timing of signs, the significance of signs, and the physical size and pinout of connectors. The present rendition In present-day PCs, USB has dislodged RS-232 from the majority of its fringe interface parts. Numerous PCs never again come outfitted with RS-232 ports (albeit some motherboards come furnished with a COM port header that enables the client to introduce a section with a DE-9 port) and should utilize either an outside USB-to-RS-232 converter or an inner development card with at least one serial ports to interface with RS-232 peripherals. In any case, on account of their straightforwardness and past pervasiveness, RS-232 interfaces are as yet utilized—especially in modern machines, organizing gear, and logical instruments where a short-extend, point-to-point, low-speed wired information association is sufficient.

4. CIRCUIT DIAGRAM

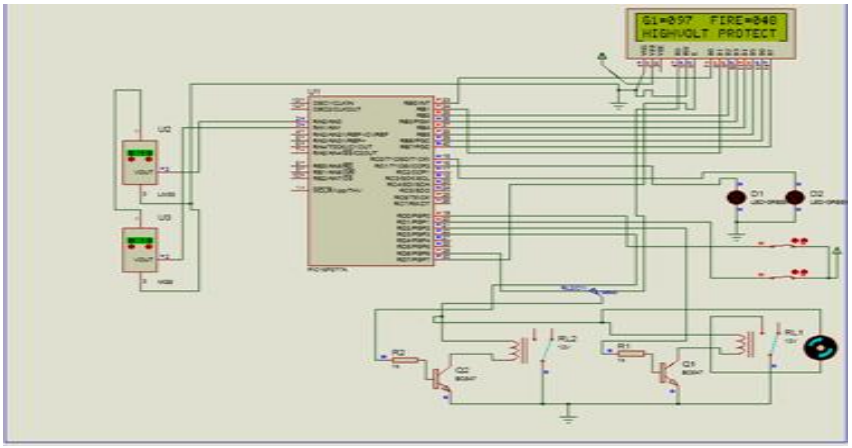

Fig. 16: Circuit Diagram Real Time Industrial Control

Published By:
Blue Eyes Intelligence Engineering
& Sciences Publication

4.1 Circuit Diagram Explanation

- The hybrid source energy is measured in the microcontroller.
- The source of energy is distributed to load depending upon energy demand.
- The 5v power supply is connected to the Microcontroller.
- The sensor is connected to the controller if the value is varied then the controller sends a message to IOT.
- The controller continuously analyzes the load through current and voltage sensor. If its range varied, the constant power is regulated by the controller.
- All the above sensing, measuring, and IOT monitors alert.

V RESULT AND DISCUSSION

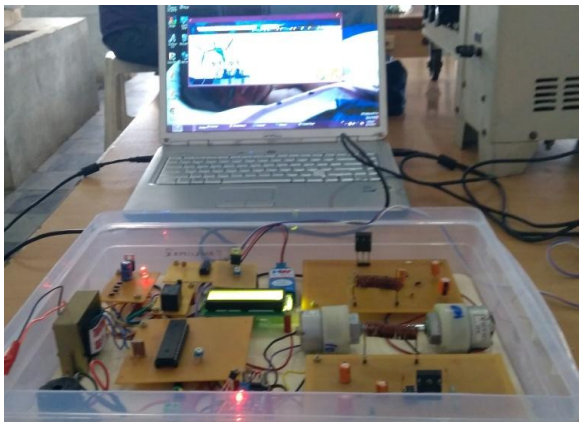

Fig. 17: Hardware model

5.1 Component Details with Specification

S.NO	COMPONENT	SPECIFICATION	RANGE
1.	PV	Solar irradiance (DC output voltage)	Input=17.0v DC to Output =21.0v DC
2.	Wind	Kinetic energy-based power production	Max output 20V Ac
3.	Transformer	Step down	(230Vac-12Vac)
4.	Rectifier	Bridge rectifier	(12Vac-12vdc)
5.	Battery	RE-chargeable	Voltage =12VDC Ampere=7.5A
6.	Voltage sensor	Measurable	(0-230v)
7.	Relay	Electromagnet to mechanically operate a switch	3 V to 32 V DC
8.	Boost converter	Regulate the voltage	12V – 24 V DC
9.	LCD	16*2	(5,9,12vdc)
10.	Buzzer	Continues flow	(0-5Vdc)
11.	Micro controller	PIC 16F877A	(0-5Vdc)
12.	Fire sensor	LM35	(0-40)
13.	Gas sensor	MQ-6	200 to 10000 ppm

5.2 Hardware Operation

- Here In the hybrid power generation system the Microcontroller and IOT plays a vital role.
- The microcontroller is used to control and analyze the parameters especially the voltage with the help of voltage sensors and maintain the constant power to the load.
- For the industrial operation purposes, the controller analyzes the preset values with the instantaneous values of both fire and gas by corresponding sensors.
- During in normal condition, the ranges of fire and gas sensors are (0-40) & (200to10000) ppm.
- The normal operation value of the gas and fire may be assumed as a preset value of the Microcontroller, and the controller and the parameters sense every variation are compared with the preset values. If any variations occur then the IOT system will alert the supervisor through SMS and mail.
- All the process will analyses and control by the IOT system through MICRO controller.

5.3 Advantages

- Both solar and wind power can be split by microcontroller depend upon peak load
- Load control system is applicable
- Load distribution is implemented
- Automation control is used for load system.
- The supervisor can able to receive the message in both in online and offline.

5. CONCLUSION

Direct torque control has been implemented for a motor using Space Vector Modulation. The results of the simulation have been documented. The scopes for line voltages, space vectors, and PWM control voltages were obtained. They are observed to be in line with the theoretical arguments put forth in the initial chapters of this work. In classical DTC, as the torque ripple is maintained within hysteresis band, switching frequency changes with speed. Moreover, the torque ripple is an important problem at low speed. So using constant switching frequency, the desired torque ripple can be achieved at low speeds where it really matters. The torque ripple for this SVM-DTC is significantly improved, and switching frequency is maintained constant. Numerical simulations have been carried out showing the advantages of the SVM-DTC method with respect to the conventional DTC.

REFERENCES

1. I. Takahashi and T. Noguchi, "A new quick response and high-efficiency control strategy of an induction motor," IEEE Trans. Ind. Appl., vol. IA-22, no. 5, pp. 820–827, Sep./Oct. 1986.
2. M. Depenbrock, "Direct self-control (DSC) of the inverter-fed induction machine," IEEE Trans. Power Electron., vol. 3, no. 4, pp. 420–429, Oct. 1988.

Published By:
Blue Eyes Intelligence Engineering
& Sciences Publication

3. A. Mir Sayeed, Donald, S. Zinger, and Malik Elbuluk, "Fuzzy controller for an induction machine," IEEE, Trans. On Industry Applications, Vol. 30, No 1, January February 1994.
4. G. Buja, D. Casadei, and G. Serra, "Direct torque control of induction motor drives," in Proceedings of the ISIE Conference, 1997, pp. TU2.
5. Domenico Casadei, Giovanni Serra, and Angelo Tani "FOC and DTC: Two Viable Schemes for Induction Motors Torque Control" IEEE, Trans. Power Electro. VOL. 17, NO. 5, pp.779-787 SEPTEMBER 2002.
6. T. Habetler, F. Profumo, M. Pastorelli, and L. M. Tolbert, "Direct torque control of induction machines using space vector modulation," IEEE Trans. Ind. Appl., vol. 28, no. 5, pp. 1045–1053, Sep./Oct. 1992.
7. S. Mir, M. E. Elbuluk, and D. S. Zinger, "PI and fuzzy estimators for tuning the stator resistance in direct torque control of induction machines," IEEE Trans. Power Electron., vol. 13, no. 2, pp. 279–287, Mar. 1998.
8. K. B. Lee and J. H. Song, "Torque ripple reduction in DTC of an induction motor driven by the three-level inverter with low switching frequency," IEEE Trans. Power Electron., vol. 17, no. 2, pp. 255–264, Mar. 2002.
9. C. Lascu, I. Boldea, and F. Blaabjerg, "Direct torque control of sensorless induction motor drives: A sliding-mode approach," IEEE Trans. Ind. Appl., vol. 40, no. 2, pp. 582– 590, Apr. 2004.
10. Manuel, A., Francis, J.: 'Simulation of direct torque controlled induction motor drive by using space vector pulse width modulation for torque ripple reduction,' Int. Int. J. Adv. Res. Electr. Electron. Instrum. Eng.., 2013, 2, (9), pp. 4471–4478.

Published By:
Blue Eyes Intelligence Engineering
& Sciences Publication