Speed Characteristics of Brushless DC Motor Using Adaptive Neuro Fuzzy PID Controller under Different Load Condition

S. Swapna, K. Siddappa Naidu

Abstract--- ***The increasing development towards usage of accurately controlled, high starting torque, high efficiency and low noise motors for devoted applications has fascinated the attention of researcher in permanent magnet brushless direct current (PMBLDC) motor. BLDC motors can act as suitable option to the conventional motors like permanent magnet direct current motor (PMDC), Switched Reluctance Motor (SRM) etc. This research paper analysis and compares the performance of a BLDC motor supplying various types of loads, and at the same time, implementing different control techniques such as fuzzy PID and ANFIS PID (Adaptive Neuro-Fuzzy Inference System PID). A comparison has been made in this research paper by observing the various speed response of brushless direct current motor at the time of application of load as well as at the time of removal of the load. The efficiency of the proposed method such as Adaptive Neuro-Fuzzy Inference System has been verified in terms of rise time, settling time and peak overshoot by developing the simulation model using MATLAB/SIMULINK.***

Keywords--- ***BLDC motor; Fuzzy Proportional-integral-derivative (fuzzy PID) controller; Adaptive Neuro-Fuzzy Inference System PID (ANFIS PID) controller; MATLAB/SIMULINK***

I. INTRODUCTION

The Brushless Direct Current (BLDC) motor is speedily gaining popularity by its deployment in various industries, such as home Appliances, Automotive sectors, Aerospace, Consumer, Medical and Instrumentation, Industrial Automation Equipment and Instrumentation. As the name implies, the BLDC motors do not use brushes for commutation purpose; instead, they are electronically commutated in BLDCM. The BLDC motors have lots of advantages over brushed direct current motors and induction motors and synchronous motors [1] & [2].

The use of hall sensor has been a success in some home appliances, automotive machine, audio loudspeaker and HVAC industry [3], however its application on BLDC motor has not been fully explore. Brushless DC (BLDC) motors are becoming commonly used as small horsepower control motors due to their high efficiency, silent operation, compact form, reliability, and low maintenance of the motor. There are quite difficulties in starting up the BLDC motor due to the back emf sensing and the trouble of the sensing method at peak load could stop the BLDC motor from running. If a three-phase six step switching commutation is in use, current flows in only two phases at any time, leaving the third terminal of the motor floating in the motor.

The zero crossing of back EMF of the floating phase can be detected in the motor to determine the commutation sequence without Hall sensors.

The most conventional method is used to build a virtual neutral point in the motor that will, in theory, be at the same potential as the center of a start (Y) wound motor and then to sense the difference between the virtual neutral points and the voltage at the floating terminal of the BLDCM[4-7].

Hence to obtain better performance speed control, the conventional PID controllers used combined with intelligent techniques such as Fuzzy logic are in widely use. Fuzzy logic controller (FLC) deals with problems having uncertainties in the motor and use membership functions with values lying between zero and one. Fuzzy logic controller (FLC) used rules to optimize the motor performances. Recently the hybrid controllers are widely in used in speed control of BLDCM.

The conventional controller PID mainly eliminate or minimize the steady state error and cancels the trouble arises due to change in load torque, while fuzzy controllers acts well with large change in reference input [8].

II. MATHEMATICALMODEL OF THE BDCM

The BDCL motor drive has three stator windings and a permanent magnet on the rotor. Since both the magnet and the stainless steel retaining sleeves have high resistivity, rotor induced currents can be ignored and no damper windings are modeled in the motor. Hence the equivalent circuit equations of the three phase winding variables are [9]

$$\begin{pmatrix} V_a \\ V_b \\ Vc \end{pmatrix} = \begin{bmatrix} R & 0 & 0 \\ 0 & R & 0 \\ 0 & 0 & R \end{bmatrix} \begin{pmatrix} i_a \\ i_b \\ i_c \end{pmatrix} + p \begin{bmatrix} L_a & L_{ba} & L_{ca} \\ L_{ba} & L_b & L_{cb} \\ L_{ca} & L_{cb} & L_c \end{bmatrix} \begin{pmatrix} i_a \\ i_b \\ i_c \end{pmatrix} + \begin{pmatrix} e_a \\ e_b \\ e_c \end{pmatrix} \quad (1)$$

Manuscript received February 01, 2019

S. Swapna, Research Scholar, Department of Electrical and Electronics Engineering, Vel Tech Rangarajan Dr. Sangunthala R&D Institute of Science & Technology, Chennai, Tamil Nadu, India.

Asst. Professor, Department of Electrical and Electronics Engineering, GRT Institute of Engineering & Technilogy, Tiruttani, Tamil Nadu, India. (e-mail: meswapna1985@gmail.com)

K. Siddappa Naidu, Professor, Department of Electronics and Communication Engineering, Vel Tech Rangarajan Dr. Sangunthala R&D Institute of Science & Technology, Chennai, Tamil Nadu, India. (e-mail: drksnaidu.blr@gmail.com)

Published By:
Blue Eyes Intelligence Engineering
& Sciences Publication

NOMENCLATURE

e_a,e_b, and e_c ……..a, b, and c phase back electromotive force (emf)s (in volts)

i_a,i_b, and i_c ……..a, b, and c phase currents in motor, (in amperes)

p……derivative operator of the controller

P……number of pole pairs in the stator

R……..stator resistance (in Ω)

T_e…….electric torque of the motor (in newton meters)

T_l……load torque, (in newton meters)

V_a,V_b, and V_c ……..a, b, and c stator phase voltages (in volts)

ω_r ……angular rotor speed (in radians per second)

ω_s…….. angular synchronous speed, (in radians per second)

Where it has been assumed that the stator resistances of all the three windings are equal. The back electromotive forces (emf) e_a,e_b, and e_c have a trapezoidal waveform[10]. Assuming further that there is no change in the rotor reluctance with angle in BLDCM, then

$L_a=L_b=L_c=L$ ……..(2)

$L_{ab} = L_{bc} = L_{ca} = M$ ……..(3)

$$\begin{pmatrix} V_a \\ V_b \\ Vc \end{pmatrix} = \begin{bmatrix} R & 0 & 0 \\ 0 & R & 0 \\ 0 & 0 & R \end{bmatrix} \begin{pmatrix} i_a \\ i_b \\ i_c \end{pmatrix} + p \begin{bmatrix} L & M & M \\ M & L & M \\ M & M & L \end{bmatrix} \begin{pmatrix} i_a \\ i_b \\ i_c \end{pmatrix} + \begin{pmatrix} e_a \\ e_b \\ e_c \end{pmatrix} \quad (4)$$

but $i_a+i_b+i_c=0$. Therefore $M_{ib}+M_{ic}= -M_{ia}$

$$\begin{pmatrix} V_a \\ V_b \\ Vc \end{pmatrix} = \begin{bmatrix} R & 0 & 0 \\ 0 & R & 0 \\ 0 & 0 & R \end{bmatrix} \begin{pmatrix} i_a \\ i_b \\ i_c \end{pmatrix} + p \begin{bmatrix} L-M & 0 & 0 \\ 0 & L-M & 0 \\ 0 & 0 & L-M \end{bmatrix} \begin{pmatrix} i_a \\ i_b \\ i_c \end{pmatrix} + \begin{pmatrix} e_a \\ e_b \\ e_c \end{pmatrix} \quad (5)$$

Hence in state space form of motor we have that

$$P \begin{pmatrix} i_a \\ i_b \\ i_c \end{pmatrix} = \begin{bmatrix} 1/L-M & 0 & 0 \\ 0 & 1/L-M & 0 \\ 0 & 0 & 1/L-M \end{bmatrix} \begin{pmatrix} V_a \\ V_b \\ Vc \end{pmatrix} - \begin{bmatrix} R & 0 & 0 \\ 0 & R & 0 \\ 0 & 0 & R \end{bmatrix} \begin{pmatrix} i_a \\ i_b \\ i_c \end{pmatrix} - \begin{pmatrix} e_a \\ e_b \\ e_c \end{pmatrix} \quad (6)$$

and

$$T_e = (e_a i_a + e_b i_b + e_c i_c)/ \omega_r \quad (7)$$

The currents i_a,i_b, and i_c needed to produce a steady state torque without torque pulsations are of 120° duration in each half cycle [10]. With AC machines that have a sinusoidal back electromotive forces (emf), a transformation can'be made from the phase variables to d, q coordinates either in the stationary, rotor, or synchronously rotating reference frames in motor. The equation of BLDCM motion is

$$p\,\omega_r = T_e - T_l - B\,\omega_r / J \quad (8)$$

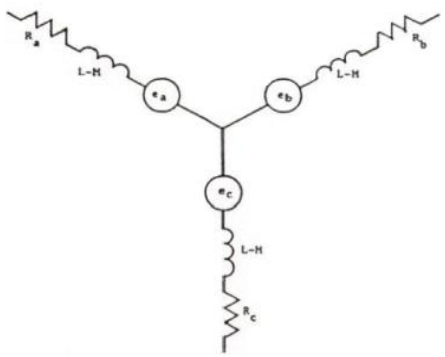

Fig. 1: BDCM equivalent circuit from dynamic equations

From the dynamic equations of the BLDC motor the circuit in Fig. 1 can be drawn. e_a,e_b, and e_c have the trapezoidal shapes characteristic of the BLDC motor. Because of this non sinusoidal shape in the back emf of BLDCM, further simplifications in the model are difficult [9].

The position derivative is expressed as [9]

$$d(\theta)/dt=\omega_r \Rightarrow p\theta= \omega_r \quad (9)$$

Equations (6), (8), and (9) correspond to the current, speed, and position derivative of the BLDC motor and, hence, the dynamic model of the BLDC motor drive [11].

A. Control of BLDC Motor: Electronic Commutation

The block diagram of the conventional closed loop speed control of BLDC motor drive is shown in Fig 2. An electronic commutation of the BLDC motor includes the proper switching of voltage source inverter (VSI) in such a way that a symmetrical direct current is drawn from the dc link capacitor for 120° and placed symmetrically at the center of each phase of the motor. A Hall-effect sensor is used to sense the rotor position on a 60° interval, which is necessary for the electronic commutation of the BLDC motor.

The conduction states of two switches (*S*1 and *S*4) are shown in Fig. 3. A line current i_{ab} is drawn from the direct current link capacitor whose magnitude depends on the applied direct current link voltage (*V*dc), back electromotive forces (*e*an and *e*bn), stator resistances (*Ra* and *Rb*), and self-inductance and mutual inductance (L_a, L_b, and M) of the stator windings. Table I shows the different switching states of the voltage source inverter (VSI) feeding a BLDC motor based on the Hall-effect position signals (*Ha*, H_b & *Hc*)[10].

Table I: Switching states for electronic commutation of BLDC motor based on hall-effect position signals

Angle of Rotation in θ (°)	Hall Signals			Electronic Switching States					
	Ha	Hb	Hc	S_1	S_2	S_3	S_4	S_5	S_6
NA	0	0	0	0	0	0	0	0	0
0-60°	0	0	1	1	0	0	0	0	1
60-120°	0	1	0	0	1	1	0	0	0
120-180°	0	1	1	0	0	1	0	0	1
180-240°	1	0	0	0	0	0	1	1	0
240-300°	1	0	1	1	0	0	1	0	0
300-360°	1	1	0	0	1	0	0	1	0
NA	1	1	1	0	0	0	0	0	0

Published By:
Blue Eyes Intelligence Engineering
& Sciences Publication

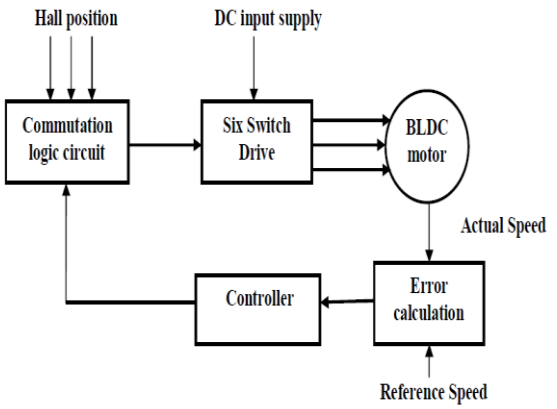

Fig. 2: Block diagram of six switch BLDC motor drive

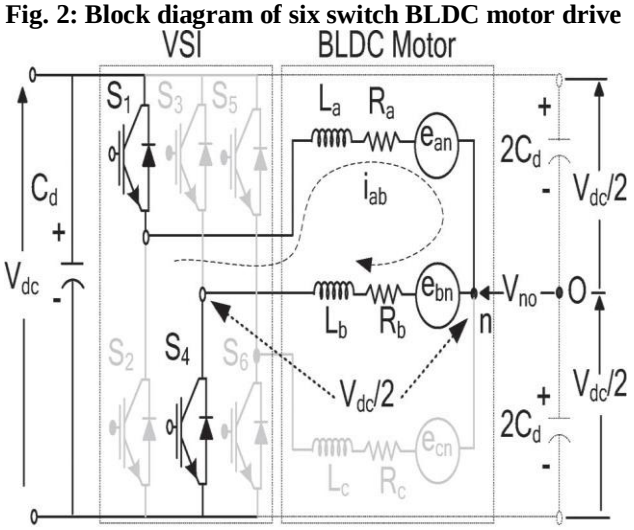

Fig. 3: Operation of a Voltage Source Inverter -fed BLDC motor when switches *S*1 and *S*4 are conducting

Now, at any instant of time, two switches, one each from the upper and the lower leg, remain in the "ON" state other than the switches in the same leg in VSI. As shown in Fig. 3, during the ON state of switches *S*1 and *S*4, dc link voltage V_{dc} is applied to line "a-b" [8]. The per-phase voltages *V*a, *V*b, and *V*c are given as [9]

$$\begin{pmatrix} V_a \\ V_b \\ V_c \end{pmatrix} = \begin{bmatrix} S_1 - S_2 \\ S_3 - S_4 \\ S_5 - S_6 \end{bmatrix} (V_{dc}/2) \quad (10)$$

where *S*1–*S*6 are the switching states of the VSI's switches and are replaced by "one" or "zero" for the "on" and "off" positions of the switch, respectively.

III. SPEED CONTROL OF BLDC MOTOR

The performance characteristics of BLDC motor drive with conventional controller as well as combination of intelligent controllers have been investigated such as fuzzy PID[12].

A) PID Controller

A proportional - integral - derivative (PID) controller is a generic control loop feedback mechanism widely used in industrial applications such electric vehicle for controlling the system. A PID controller attempts to correct the error between a measured variable and a desired value of set point by calculating and then outputting a corrective action that can be adjust the process accordingly in the BLDC motor drive. A PID controller is a simple three term controller such as proportional, Integral and derivative [13].

In terms of error, the PID controller can be represented as

$$u(t)=K_p\, e(t)+ K_i \int e(t)\, dt+K_d \frac{de(t)}{dt} \quad (11)$$

Where K_p is the proportional gain, K_i is the Integral gain and K_d is the derivative gain.

Due to its simplicity and excellent performance in many applications, PID controllers are used in more than 95% of closed –loop operation in Industrial Automation Equipment and Instrumentation [14].

B) Fuzzy Logic Controller (FLC)

Fuzzy logic controller is based on linguistic control strategy uses human interface to increase the system performance without knowing the mathematical model of the system. Fig.4 shows the basic configuration of fuzzy logic controller (FLC)[12].

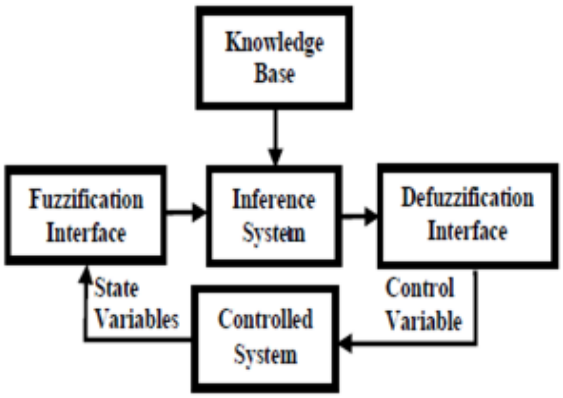

Fig. 4: Basic block diagram of Fuzzy logic controller (FLC)

The BLDC motor drive has been simulated in the MATLAB/SIMULINK environment. Fig.5&6 shows the SIMULINK model of BLDCM equipped with Fuzzy PID controller and ANFIS PID controller respectively. The motor is fed by a pulse width modulation (PWM) inverter. The voltage source inverter gate signals are produced by decoding the Hall Effect signals. The BLDC motor specification of various parameters used for simulation as shown in TABLE II.

TABLE II: SPECIFICATION OF BLDC MOTOR

Parameters	Values
Number of poles	4
P_{rated} (Rated power)	251.32 W
V_{rated}(Rated dc link voltage)	200 V
T_{rated} (Rated torque)	1.2 N · m
ω_{rated} (Rated speed)	2000 r/min
K_b (Back EMF constant)	78 V/kr/min
K_t (Torque constant)	0.74 N · m/A
R_{ph} (Phase resistance)	14.56 Ω
L_{ph}(Phase inductance)	25.71 mH
J (Moment of inertia)	1.3 ×10−4 N·m/A2.

Published By:
Blue Eyes Intelligence Engineering
& Sciences Publication

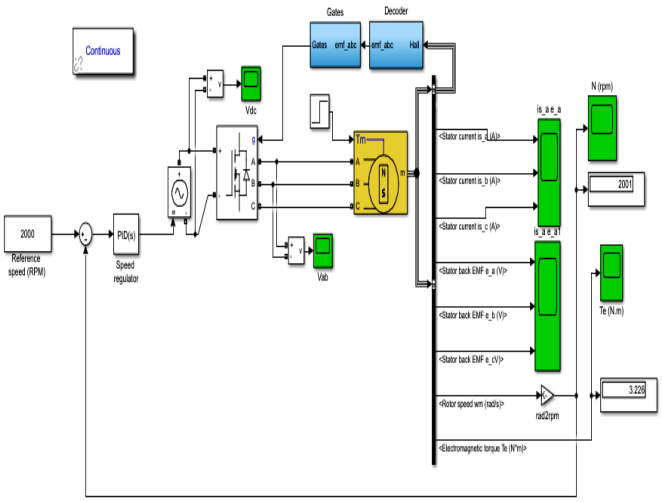

Fig. 5: SIMULINK model of BLDCM equipped with Fuzzy PID controller

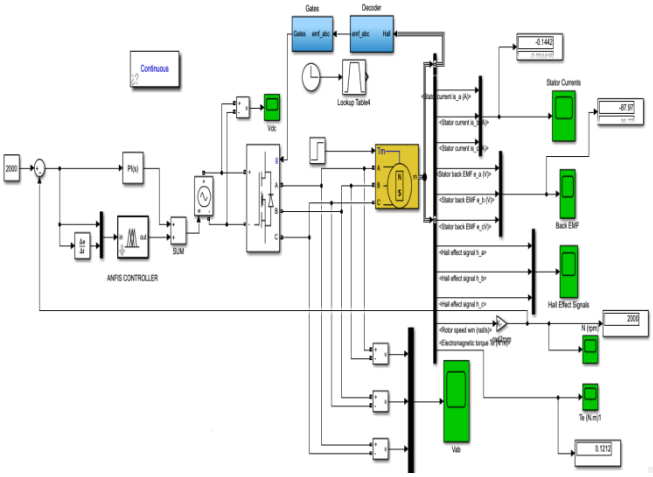

Fig. 6: SIMULINK model of BLDCM equipped with ANFIS PID controller

The Fuzzy Logic Controller such as fuzzy PID and ANFIS PID has been designed using the MATLAB Fuzzy Toolbox and the membership function editor developed is as shown in Fig.7. In the present work, Mamdani based fuzzy system is used for fuzzy PID and Tarki Sugeno based fuzzy system is used for adaptive neuro-fuzzy inference system PID(ANFIS PID). For controlling the speed of BLDCM, error in speed and rate of change in speed error are taken as the input variables and gains (Kp, Ki and Kd) are taken as the output variables. Hence in the present work, a fuzzy system with two inputs(e & ce) and three outputs(Kp, Ki and Kd) are simulated[15]. The triangular membership function has been used for its simplicity and high performance [8].

Each universe of discourse has been divided into seven fuzzy sets such as Negative Big (NB), Negative Medium (NM), Negative Small (NS), Zero (ZE), Positive Small (PS), Positive Medium (PM),Positive Big (PB). A rule base consisting of forty nine fuzzy rules has been created based on the pre-defined membership of the two inputs (e is the error, ce is the change in error) and the three outputs (Kp, Ki and Kd).

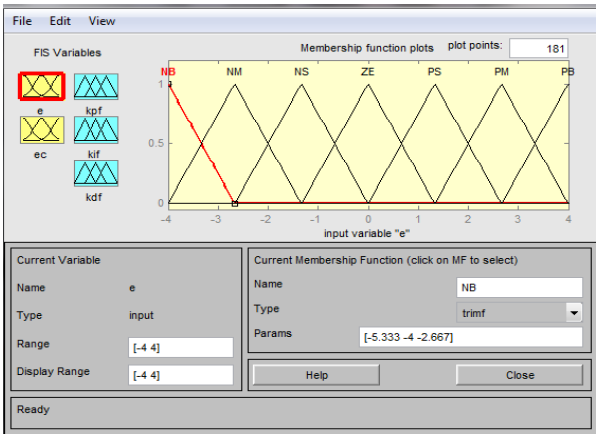

Fig. 7: Membership function editor for Fuzzy – PID

The fuzzy rules for one output proportional gain (Kp) is summarized in the form of a rule matrix form as shown in Table-III. Similar rule matrices can be formulated for Integral gain(Ki) and derivative gain(Kd) also. The rule base has been included in the Fuzzy Interface System Editor of the present work by means of the Rule Editor in FLC [12].

Table III: Rule Matrix for KP

Error/Change in error	NB	NM	NS	Zero	PS	PM	PB
Negative Big	NB	NB	NB	NB	NM	NS	Zero
Negative Medium	NB	NB	NB	NM	NS	Zero	PS
Negative Small	NB	NB	NM	NS	Zero	PS	PM
Zero	NB	NM	NS	Zero	PS	PM	PB
Positive Small	NM	NS	Zero	PS	PM	PB	PB
Positive Medium	NS	Zero	PS	PM	PB	PB	PB
Positive Big	Zero	PS	PM	PM	PM	PM	PM

IV. RESULTS AND DISCUSSION

The BLDC Motor drive has been modeled and simulated with different types of controllers. The performance of BLDC motor has been evaluated, under different conditions of loading and speed as described in the methods below:

A) Method 1: PID Controller

Fig. 8(a) & (b) shows the time variation(T_r , T_s) and speed attained($S_{100\%}$, $S_{50\%}$) appearing while implementing closed loop **PID** controller as a speed controller in BLDC motor analysis, A rise time of 0.017563 seconds and settling time of 0.018095 seconds are arrived , which is quite reasonable and in accordance with the simulated results.

Published By:
Blue Eyes Intelligence Engineering
& Sciences Publication

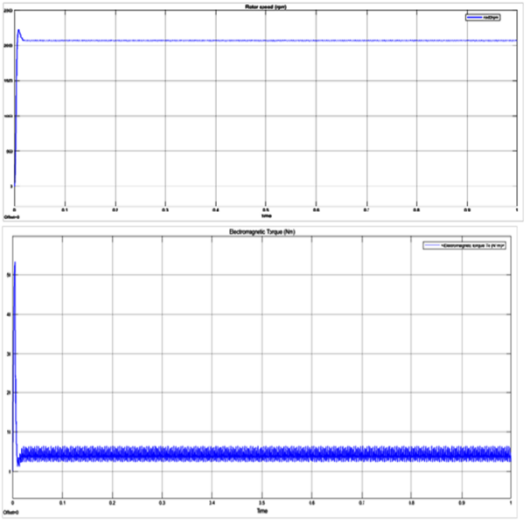

a) When Load is 100%

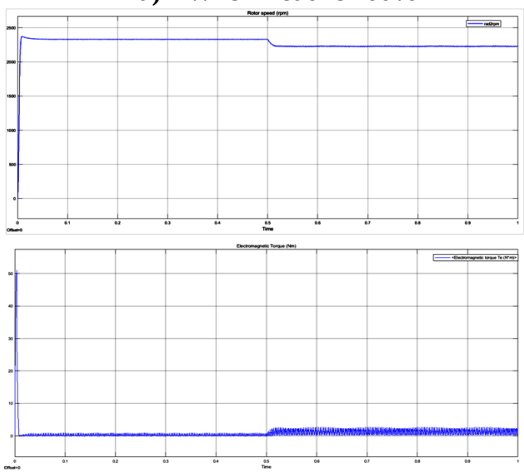

b) When Load is 50%

Fig. 8 (a) & (b) Speed Characteristics of BLDCM under different percentage of load and fixed Speed of 2000 rpm using PID Controller

B) Method 2: Fuzzy PID Controller

Fig. 9(a) & (b) shows the time variation(T_r , T_s) and speed attained ($S_{100\%}$,$S_{50\%}$) appearing while implementing closed loop Fuzzy PID controller as a speed controller in BLDC motor analysis, A rise time of 0.006317 seconds and settling time of 0.006432 seconds are arrived , which is quite reasonable and in accordance with the simulated results.

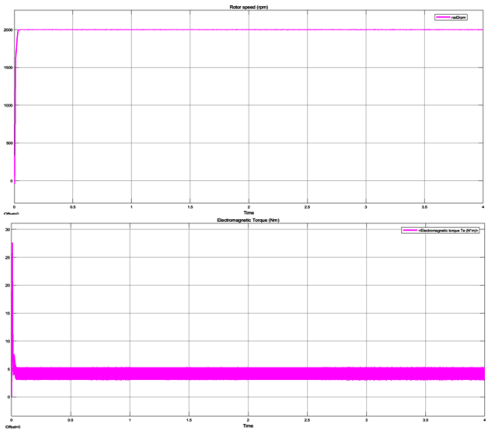

a) When Load is 100%

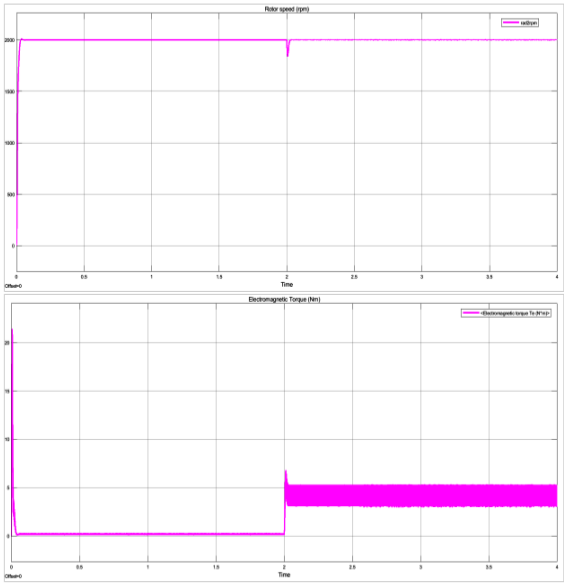

b) When Load is 50%

Fig. 9 (a) & (b) Speed Characteristics of BLDCM under different percentage of load and fixed Speed of 2000 rpm using Fuzzy PID Controller

C) Method 3: ANFIS PID Controller

Fig. 10 (a) & (b) shows the time variation(T_r , T_s) and speed attained($S_{100\%}$, $S_{50\%}$) appearing while implementing closed loop Fuzzy PID controller as a speed controller in BLDC motor analysis, A rise time of 0.006025 seconds and settling time of 0.006074 seconds are arrived , which is quite reasonable and in accordance with the simulated results.

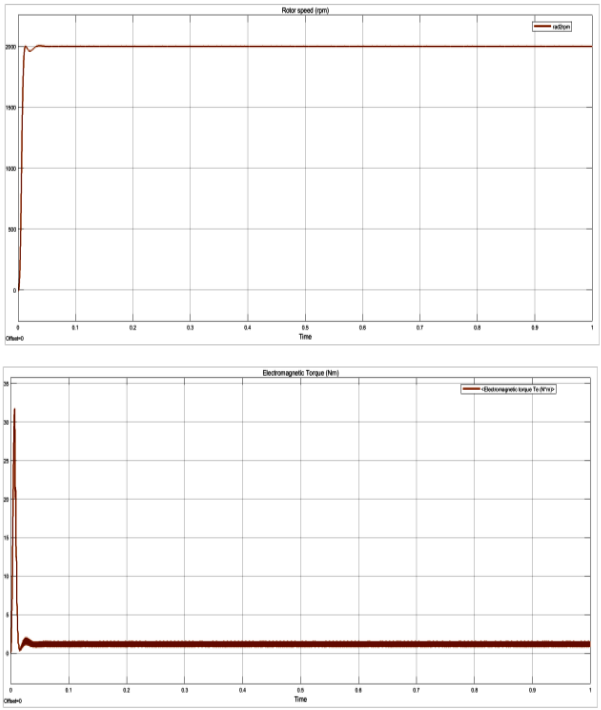

a) When Load is 100%

Published By:
Blue Eyes Intelligence Engineering
& Sciences Publication

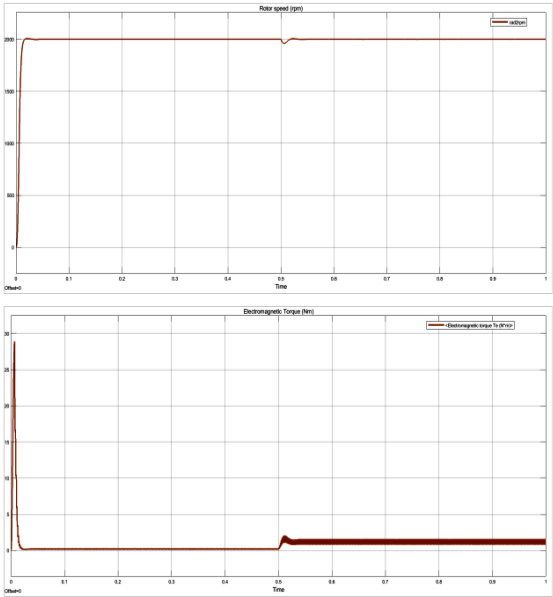

b) When Load is 50%

Fig. 10 (a) & (b) Speed Characteristics of BLDCM under different percentage of load and fixed Speed of 2000 rpm using ANFIS PID Controller

Table IV, V and VI shows a comparative analysis of four different load configurations of the BLDC motor drive. The evaluation is based on settling time, rise time and peak overshoot of closed loop PID controller, Fuzzy PID controller and ANFIS PID controller implemented respectively in BLDC motor drive.

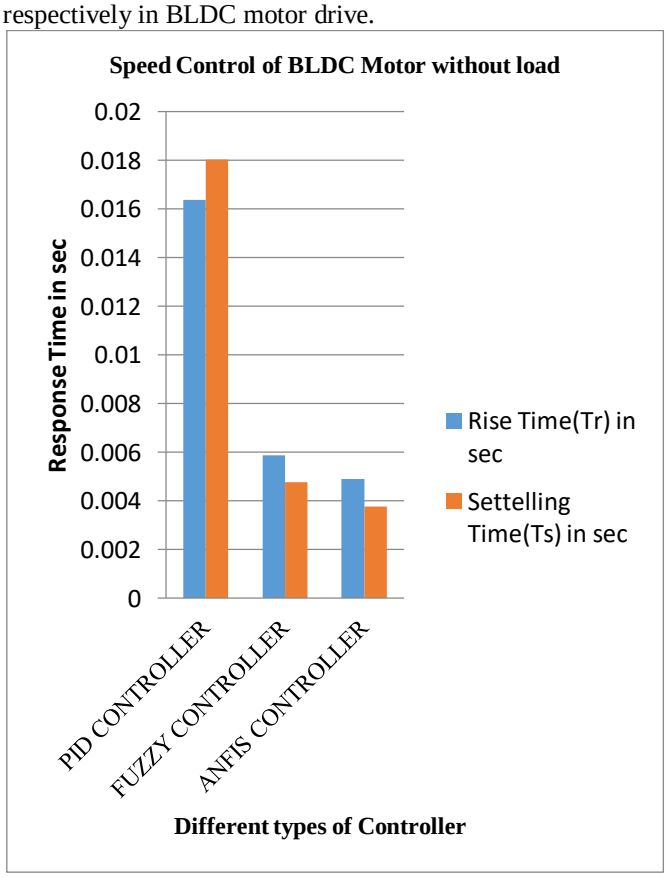

(a)

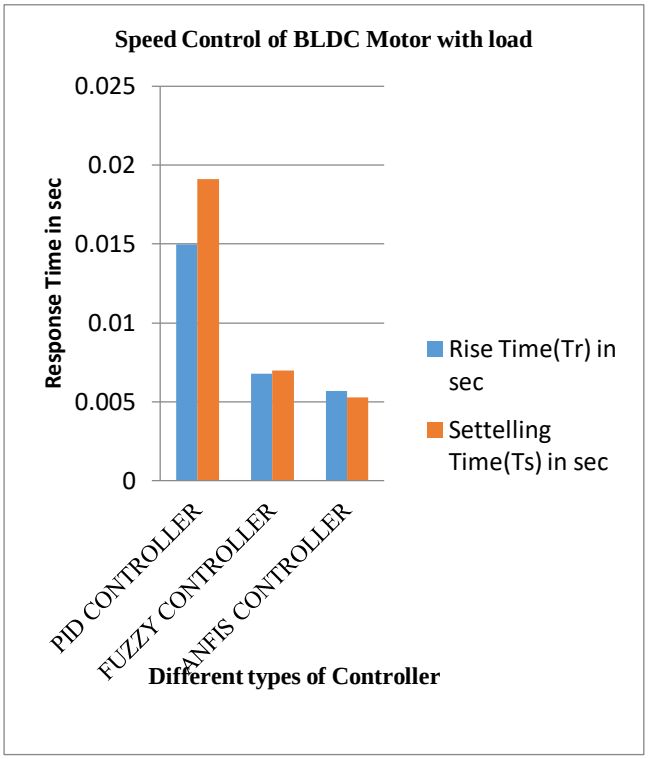

(b)

Fig.11 (a)&(b) Comparative analysis of (a) Without Load and (b) With Load for Various types of Controllers

Table IV: Performance parameters values with designed PID controller

Different Load	Actual Speed (rpm)	Torque (Nm)	Time Period(sec)	Rising Time(sec)	Settling Time(sec)	Overshoot	Error Speed (rpm)
No Load	2001	0.2707	4 sec	17.429ms (0.017429 s)	18.015ms (0.018015 s)	0.448%	1
50 % of Load	2001	3.218	4 sec	17.563ms (0.017563 s)	18.109ms (0.018109 s)	0.505%	1
75 % of Load	2002	3.175	4 sec				2
Full Load	2000	3.226	4 sec				0

Published By:
Blue Eyes Intelligence Engineering
& Sciences Publication

Table V: Performance parameters values with designed Fuzzy PID controller

Different Load	Actual Speed (rpm)	Torque (Nm)	Time Period(sec)	Rising Time(sec)	Settling Time(sec)	Overshoot	Error Speed (rpm)
No Load	2000	0.1212	1 sec	6.968ms (0.006968s)	7.794ms (0.00779s)	0.286%	0
50 % of Load	2000	1.484	1 sec	6.317ms (0.006317s)	6.432ms (0.006432s)	0.498%	0
75 % of Load	2000	1.476	1 sec				0
Full Load	2000	1.48	1 sec				0

Table VI: Performance parameters values with designed ANFIS PID controller

Different Load	Actual Speed (rpm)	Torque (Nm)	Time Period(sec)	Rising Time(sec)	Settling Time(sec)	Overshoot	Error Speed (rpm)
No Load	2000	0.1211	1 sec	6.791ms (0.006791s)	6.999ms (0.06791s)	0.281%	**0**
50 % of Load	2000	1.484	1 sec	6.025ms (0.006025s)	6.074ms (0.006074s)	0.35 %	**0**
75 % of Load	2000	1.476	1 sec				**0**
Full Load	2000	1.48	1 sec				**0**

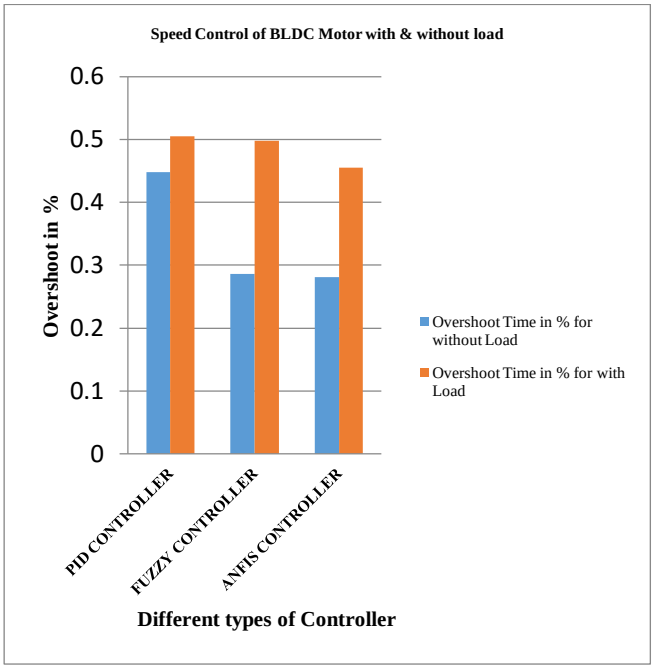

Fig.12: Comparative analysis peak overshoot (%Mp) for Various types of Controllers

Fig.11(a)&(b) and Fig. 12 shows a comparative analysis for speed control of BLDC motor drive using different types of controller, which shows clearly adaptive neuro fuzzy interface system (ANFIS) have better performance than the conventional methods like PID and fuzzy PID controller . The evaluation is based on settling time, rise time and peak overshoot (%Mp) of closed loop PID controller, Fuzzy PID controller and ANFIS PID controller implemented respectively in BLDC motor drive.

V. CONCLUSIONS

Brushless DC motor model is developed in this paper for different load configuration using MATLAB/SIMULINK to analyze its characteristics and Performance with PID controller, Fuzzy PID Controller and ANFIS PID controller. A comparison is made with conventional method (PID controller) as well fuzzy – based controllers has been carried out under different loading and unloading conditions for speed control of BLDC motor. From the simulation results it has been proved that under different loading and unloading conditions, ANFIS PID controller performs better than other controllers in terms of improving the controller parameters such as rise time(t_r), settling time(t_s) and Peak overshoot(%M_p).

REFERENCES

1. B.Indu Rani, Ashly Mary Tom, "Dynamic Simulation of Brushless DC Drive Considering Phase Commutation and Backemf Waveform for Electromechanical Actuator", IEEE TENCON 2008, Hyderabad. ISBN: 978-1-4244-2408-5.

Published By:
Blue Eyes Intelligence Engineering
& Sciences Publication

2. Balogh Tibor,Viliam Fedak, Frantisek Durovsky., "Modeling and Simulation of the BLDC Motor in MATLAB GUI", Proceedings of the IEEE Fifth International Conference on Fuzzy Systems and Knowledge Discovery, US, pp. 1403- 1407, 2011
3. J.Shao, D.Nolan, and T.Hopkins, "A Novel Direct Back EMF Detection for Sensorless Brushless DC (BLDC) Motor Drives," Applied Power Electronic Conference (APEC 2002), pp33-38.
4. D. M. Erdman, "Control system, method of operating an electronically commutated motor, and laundering apparatus," US Patent 4654566, March 31, 1987.
5. T.Endo, F.Tajima, et al., "Microcomputer Controlled Brushless Motor without a Shaft Mounted Position Sensor," IPEC-Tokyo, 1983.
6. D.Erdman, US Patent No.4654566, "Control system, method of operating an electronically commutated motor, and laundering apparatus," March 1987.
7. K.Uzuka, H.Uzuhashi, et al., "Microcomputer Control for Sensorless Brushless Motor ," IEEE Trans. Industry Application ,vol.IA-21, MayJune, 1985.
8. [8] Muhammad Firdaus Zainal Abidin, Dahaman Ishak, Anwar Hasni Abu Hassan, "Comparative Study of PI, Fuzzy and Hybrid PI Fuzzy Controller for Speed Control of Brushless DC Motor Drive", Proceedings of the IEEE International Conference in Computer Application and Industrial Electronics Application, Malaysia, pp.189-195, December 2011.
9. P. Pillay and R. Krishnan, "Modeling of permanent magnet motor drives,"*IEEE Trans. Ind. Electron.*, vol. 35, no. 4, pp. 537–541, Nov. 1988.
10. P. Pillay and R. Krishnan,"Modeling simulation and analysis of a permanent magnet brushless dc motor drive," presented at the IEEE IAS Annual Meeting, Atlanta, 1987.
11. Vashist Bist and Bhim Singh, "An Adjustable-Speed PFC Bridgeless Buck–Boost Converter-Fed BLDC Motor Drive," *IEEE Trans. Ind. Appl.*, vol. 61, no. 6, pp. 2665–2676, JUNE. 2014.
12. Md Mustafa kamal , Dr.(Mrs.)Lini Mathew and Dr. S. Chatterji "Speed Control of Brushless DC Motor Using Fuzzy Based Controllers" 2014 IEEE Students' Conference on Electrical, Electronics and Computer Science.
13. K.S. Tang, Kim Fun Man, Guanrong, Sam Kwong., "An Optimal Fuzzy PID Controller", IEEE Transactions on Industrial Electronics Vol. 48, No. 4, pp.757-765, August 2001.
14. PetarCmosija, RamuKrishnant, ToniBjazic., "Optimization of PM Brushless DC Motor Drive Speed Controller using Modification of Ziegler- Nichols Methods Based on Bode- Plots EPE-PEMC", Proceedings of the IEEE International Conference on Power Electronics, Slovenia, pp 343-348, 2006.

Published By:
Blue Eyes Intelligence Engineering
& Sciences Publication