A Modern Technique Enabling Social Interactions for Paralyzed People with Talk Back System

G. Valarmathi, K. Gayathri, B. Sai Kruti, A. Tabitha Jerusha

Abstract--- ***It is known that the technological advancements are increasing at a faster pace. But the utilization of these technologies in various sectors is very low. Communications between paralyzed and a standard person have invariably been a difficult task. The project aims to facilitate individuals by means of a human activities based communication interpreter system. For every specific gesture produces a proportional amendment in resistance and measures the orientation of hand. This will be useful for person who had leg paralyzed. Eyeball and head movements are also monitored. The process of those human movements finished in controller. This section is useful for fully paralyzed persons.***

Keywords--- ***Paralysis, Sign Language, Eyeball Movement.***

I. INTRODUCTION

Paralysis is a disease, making people lose their facial movements, which are caused by nerve damages. People suffering from paralysis usually have muscles on one side noticeably droop, which seriously impacts the person's quality of life[1]. Paralysis can incur eye damage even blindness, because the eyelid on the affected side cannot fully close, which makes the eye dry and infected by debris. The most common form of facial paralysis is known as Bell's palsy, which impacts 40,000 people in U.S. each year, where the typical symptom is the muscle dysfunction on one side or the complete body. As the population is increasing there are increases in numbers of people who are victims of locked in syndrome; and other paralysis diseases [1].This paper deals about the health care system for the paralytic patients by sensing three different movements. The three different movements are the hand gestures, head orientations and the eye ball movements. The hand gestures and the head orientations are detected by the MEMS sensors, here we use an accelerometer for the detection of the movements. This project's goal is to develop an interface that senses the movements of the hand and head orientations of the paralytic patients and accordingly we deliver the alert sound through the speaker which is connected to the voice IC and we also deliver the message to the linked contacts via IOT module. The other advancement is that we are also monitoring the eye ball movements since some of the paralytic patients are fully paralyzed. Eyes can be considered the most salient and stable features in human face in comparison with other facial features [18]. In which a web came is firmly set in front of eyes on cap or can be at glasses, continuously looking at the user's eyes. The MATLAB application is designed at the user's laptop which is wired with the web came in front of eyes which reacts on the movements of eyes of the user in different directions. In line with the series associated with snapshots used and after that processed and also the motion from the user eye are detected, and is transferred to the PIC16F877A microcontroller [1].

II. PROJECT DESIGN

The proposed architecture consists of the following modules:

1. Movement of the hand using MEMS sensor.
2. Checking the orientation of head.
3. Detecting the eyeball movement.
4. Using an IOT module for distant communication.

In this system we are doing a project based on human activities movements. Such as hand gesture hand orientation, eyeball movement. Using camera to find out the human eye movements. Camera captures the image using MATLAB to identify the eye movements. Suppose human eyeball move one side we will intimate the corresponding actions to play Voice IC using speaker. We are already stored in some data sets. Here we are using MEMS sensor to find the head orientation Suppose human will react on head orientation, based on hand movements. We will intimate the corresponding person to voice IC using speaker. The sign language from the hand gesture is sent to the PIC16F877A microcontroller will send the respective VOICE IC for gestures that are pre-assigned. Based on the corresponding gesture made cloud upload and SMS will be sent to the particular person using IOT module. This brought forth the motivation of using non-intrusive, vision-based approaches for recognizing.

We decided to use the web camera to detect the eye movements which will be further processed to drive the relays. For the simplicity and to make a prototype, we are going to design a small, motorized, wooden platform and we will attach the web camera on the helmet. We will use serial communication to communicate between the web camera and microcontroller.

Manuscript received February 01, 2019

G. Valarmathi, Electronics and Communication Engineering, Sri Sairam Institute of Technology, Chennai, Tamil Nadu. (e-mail: valarmathi.ece@sairamit.edu.in)

K. Gayathri, Electronics and Communication Engineering, Sri Sairam Institute of Technology, Chennai, Tamil Nadu. (e-mail: gayathrik9295@gmail.com)

B. Sai Kruti, Electronics and Communication Engineering, Sri Sairam Institute of Technology, Chennai, Tamil Nadu. (e-mail: kruti1737@gmail.com)

A. Tabitha Jerusha, Electronics and Communication Engineering, Sri Sairam Institute of Technology. Chennai, Tamil Nadu. (e-mail: tabithaj1402@gmail.com)

Published By:
Blue Eyes Intelligence Engineering
& Sciences Publication

The microcontroller will drive the relay in the direction the person will look through web camera. The type of artificial aid needed by a disabled person in order to move about depends, to a large extent, on the level of his incapacity [7]. Eye detection and motion tracking is also the main factor of proposed design. Also PIC16F877A microcontroller is used to communicate to web camera.

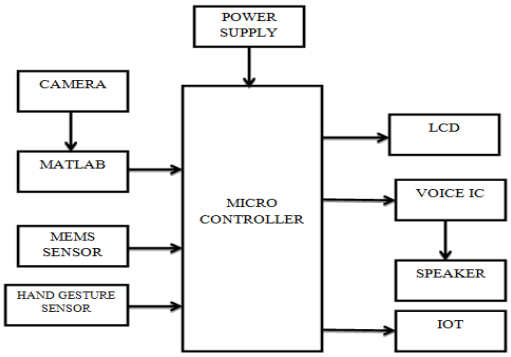

Fig. 1: Block diagram of the proposed system

Fig1 is the basic block diagram of the proposed system.In the proposed system the mems sensor which we are using is the accelerometer.Accelerometers are useful for sensing vibrations in systems or for orientation applications. Accelerometers can measure acceleration on one, two, or three axis.So in this proposed design the accelerometer is used to detect the movements of the hand and then the signals are further given to the PIC16F877A microcontroller.

The voice IC which we are using in this project is APR9600.The APR9600 device offers true single-chip voice recording, non-volatile storage, and playback capability for 40 to 60 seconds. The voice IC is further connected to the speaker from where we get the emergency alert in the form of sound when the paralytic patients are in need of something or in case of the paralytic patient's emergency.

III. EYE DETECTION

A webcam is fixed at the cap or glasses in front of user eyes looking at the eyes continuously and reacts on the movements of it. That web came is connected to the user's laptop which runs the MATLAB application continuously. Based on the series of snapshots taken and thereafter processed, the motion of user eyes are detected. Decision to move the relay in particular direction is taken and communicated serially to PIC16F877A microcontroller. Image processing toolbox is bringing into service for eye detection in MATLAB. 'Cascade Object Detector' capable of detecting eye shaped objects dependent on the reshape and size[1].Through this way we can detect the eyeball movement and sense the emergency of the paralytic patient.

IV. SOFTWARE DESIGN

In our proposed system the software is required only for the detection of the eyeball movements, in which the eyeball movement is captured as a snapshot and it is further processed in the MATLAB. So MATLAB is the only which we are using in this project. The other sensors which are used for the detection of the head and the hand movements requires only the microcontroller codes.

The MATLAB component is responsible for capture of regular snapshots, processing of those snapshots, determining the movement of eyes. A four-stage algorithm is developed to estimate the directions of eye movements and then use the direction information to manipulate the computer [19]. Web camera which is connected via a USB cable to the Computer is used on which the MATLAB script is running. This pre-processing of the image makes the image easier to process and extract the eyes from image.

V. HARDWARE IMPLEMENTATION

Fig. 2: Hardware design

The hardware consisted on PIC16F877A microcontroller, APR9600 voice IC, IOT module, accelerometer and a speaker.

The MEMS sensor is interfaced to the PIC16F877A microcontroller which detects the head and the hand movements of the patients. This MEMS sensor has three axis detection. The other component which is the LCD which is used for the display of sensor ranges. The IOT module is used in order to send the message of the patient's emergency to the close people of the patient. Here we are even using the speaker so that the emergency of the patient can be indicated via voice signals. These voice signals are delivered using the speaker which is connected to the voice IC and the microcontroller. The camera is mounted on a hat in front of the eyes and that camera is connected to a laptop on which the MATLAB script has to be run. We connect our hardware to the laptop through RS232 cable wire which is use for serial transmission between laptop and micro-controller. The detection of the eyes movement is done with a very primary concept. Features point of both right and left eyes are utilized to conserve it.

Published By:
Blue Eyes Intelligence Engineering
& Sciences Publication

Afterwards take the differentiation in pixels of the right eye position as well as left eye position in the current snapshot from the previous snapshot. For valid attempt at least minimum movement of eye is needed and for this threshold is set. Similarly same phenomenon is follow for each position of right, left, up and down position.
Snapshot difference is estimated in each snapshot [1].The captured snapshot is compared with the threshold if it is beyond the threshold then the voice indication will be provided.

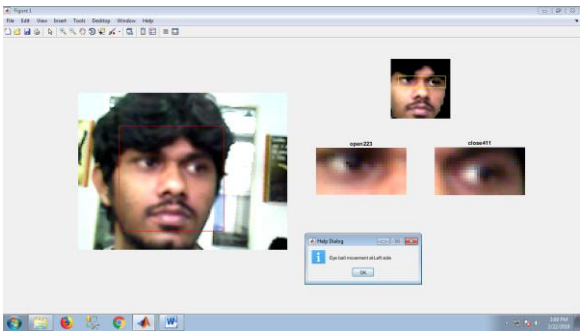

Fig. 3: Eyeball movement detection

Fig. 4: Hardware design with web camera

Fig4 shows the hardware connected to the PC through the RS232 cable wire so that the captured snapshots are given to the microcontroller.

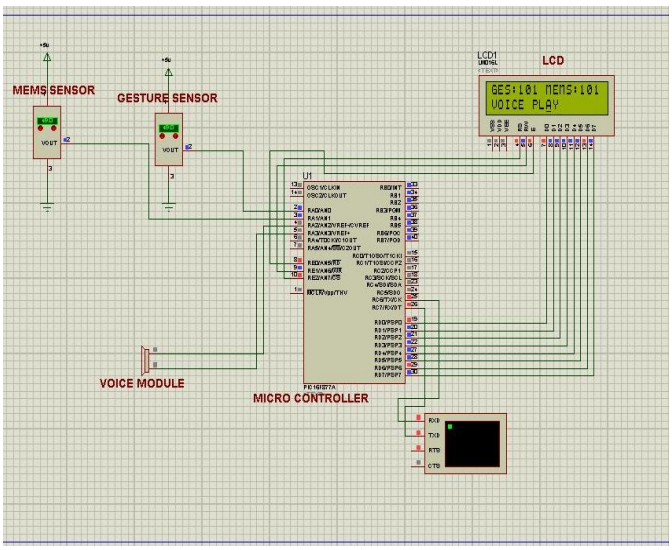

Fig. 5: Circuit diagram

VI. RESULTS

In this paper an eye detection, head orientation and the hand gestures of the paralytic patients are noted in order to aid the patients without staying for all the time. The way to communicate to the paralytic in the earlier days were only the sign language which is not known by many. So it was a very difficult task to know the emergency situation of the paralytic patient and there should always be a person to aid the patient which is not necessary in this proposed design.

This project is made for the aid of the paralytic patient's. This can be even a wearable device, a kind of the wrist band and for the head orientation we are using a wearable form of helmet. Thus it is useful for the paralytic patients.

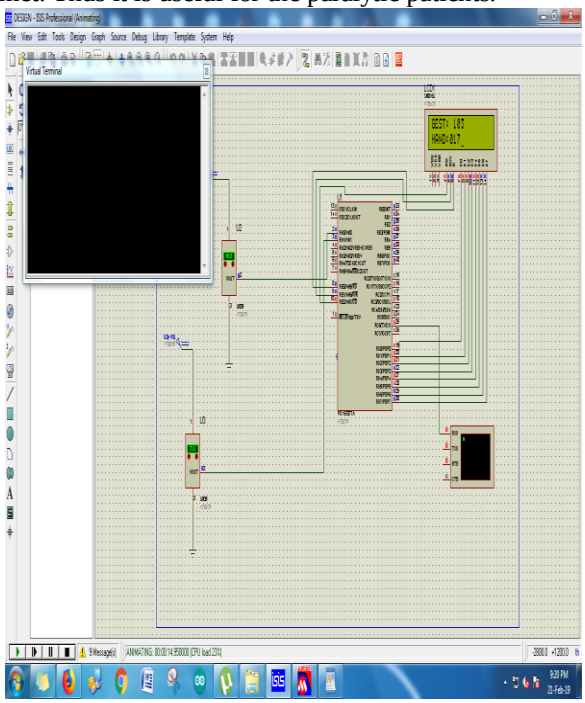

Fig. 6: Stimulation output 1

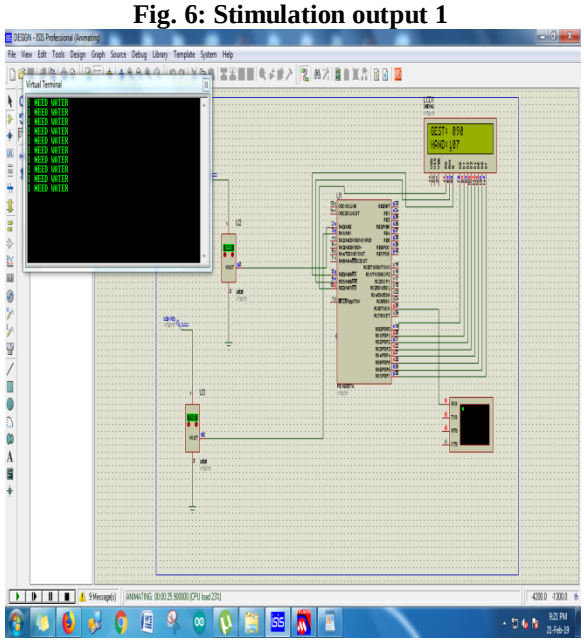

Fig. 7: Stimulation output 2

In the Figure6, there is no indication in the output since it has not reached the threshold value whereas in the figure7,

Published By:
Blue Eyes Intelligence Engineering
& Sciences Publication

we have got the output since it has gone beyond the threshold value.Figure7 shows the output as “I need water” as the database is created with that value as the threshold value.

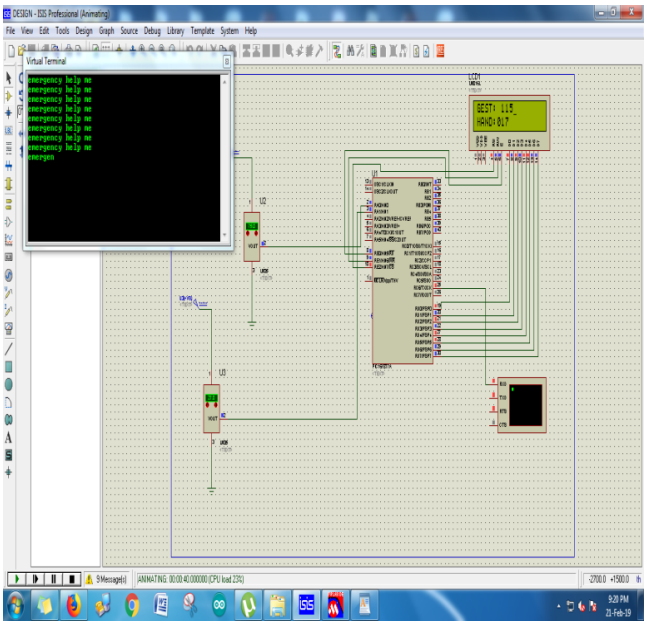

Fig. 8: Stimulation output 3

In the figure8, we obtain the output as “Emergency help me”. This output is displayed since it is beyond its threshold value. The displayed output is also given in the form of message through the IOT module and in the form of voice signals via the speaker.

The project performs satisfactory with performance accuracy of around 70-90%.It is all about interfacing the sensors detection and the eyeball movement.

VII. CONCLUSION

Thus the system provides an efficient working, as all the test cases are executed and the expected output is satisfied and serves the effective functioning of the system.

REFERENCES

1. AsfandAteem, Zeeshan Ali Akbar,Mairaj Ali, Muhammad Asad Bashir, -“Eye Monitored Device for disable People”
2. Thanmay Rajpitak Ratnesh Kumar Eric Scwarts "Eye Detection Using Morphological and Color Image Processing" Florida Conference on Recent Advances in Robotics FCRAR 2009.
3. S.Tameemsultana and N. Kali Saranya, “Implementation of Head and Finger Movement Based Automatic Wheel Chair”, Bonfring International Journal of Power Systems and Integrated Circuits, vol. 1, Special Issue, pp 48-51, December 2011.
4. Anbarasi Rajamohan, Hemavathy R., Dhanalakshmi M."Deaf-Mute Communication Interpreter", International Journal of Scientific Engineering and Technology Volume 2 Issue 5, pp: 336-341 (ISSN: 2277-1581)
5. Kuldeep Singh Rajput, Shashank Deshpande, Uma Mudenagudi, "INTERACTIVE ACCELEROMETRIC GLOVE FOR HEARING IMPAIRED".
6. Nikolaos Bourbakis, Anna Esposito, D. Kabraki, "Multimodal Interfaces for Interaction-Communication between Hearing and Visually Impaired Individuals: Problems & Issues", 19th IEEE International Conference on Tools with Artificial Intelligence.
7. Netchanok Tanyawiwat and Surapa Thiemjarus, Design of an Assistive Communication Glove using Combined Sensory Channels, 2012, Ninth International Conference on Wearable and Implantable Body Sensor Networks.
8. N.Bourbakis, An SPNG based method for image to NL text conversion, PR Journal.
9. G. Grimes, Digital Data Entry Glove Interface Device, AT & T Bell Labs, 1983.
10. D. Sturman and D. ZeIter, -A survey of glove-basedinput, II IEEE Computer Graphics and Applications, vol. 14, no. l, pp. 30-39, 1994.
11. M. Mohandes and S. Buraiky, -Automation of the Arabicsign language recognition using the powerglove, II AIMLJournal, vol. 7, no. 1, pp. 41-46,2003.

Published By:
Blue Eyes Intelligence Engineering
& Sciences Publication