International Journal of Recent Technology and Engineering (IJRTE)
ISSN: 2277-3878 (Online), Volume-7 Issue-4s2, December 2019

Investigation on Flexural Behaviour of Beam with Bamboo as Main Rebars

P. Rama Mohan Rao, S. Karthik

***Abstract:** This study mainly focusing on to reduce the cost of materials which are utilized for construction purpose particularly steel. Steel is the material which is used for all types of reinforcement in column, beam and slab. The main disadvantage of this material that it easily corrodes when it interacts with moisture and due to this effect, its strength is also greatly reduced and it leads to durability problem in buildings. For reducing this effect, we utilize the bamboo rebars as a reinforcement in the place of steel for not only to increase durability property but also to enhance the utilization of low-cost and efficient materials for construction purpose. The bamboo can be replaced in structural member with certain percentages such as 25 %, 50 %, 75 % and 100% as a main rebars. The bamboo rebars were placed in both tension and compression zone on 0.7 m beams. The beams are tested under loading frame and test results are obtained. In loading frame, two-point loads were given in one- third of position on both ends in beam. From the test result, it was compared with conventional beam in flexural strength, deflection and their crack pattern and it shows that 25 % bamboo replacement beam obtain greater strength than other percentage of bamboo beams. From our research, we recommend that bamboo can also be utilized in members instead of steel in structural members.*

***Keywords:** Bamboo reinforcement beams, crack pattern, deflection and flexural strength.*

I. INTRODUCTION

Concrete is the one which is widely used for construction all around the world. Concrete is homogeneous material and it consist of cement, fine aggregate and coarse aggregate and other admixtures which are added to the concrete to develop the strength and special properties in concrete. [1] says that construction industry is the major consumer of materials in most of all countries. Concrete is the most used construction material in the all around the world. Generally, Concrete is good in compressive strength but poor in tensile strength. To retain strength in tension, steel reinforcements are provided in that zone. [2] conveys that in all developing countries, steel is difficult to get because of its high cost. In construction industry, usage of steel is currently limited greatly. For this reason, many researches are done to increase the use of low-cost natural material for construction. The material which is widely used in rural areas is bamboo because of its low-cost, availability and its strength characteristics compared with other natural material. Many researchers have found that it can also be used as a reinforcing material in column and beams.[6] studied about the use of bamboo as a reinforcement in concrete structural member and he concluded that bamboo can also be used as a reinforcing material without treatment of bamboo and stirrups in beams.

[7] Investigates about the strength of bamboo with the use of 20 different treatments are done to study the bond strength. It also helps to evaluate the performance of mild and TMT steel rebars in comparison with the bamboo.

It results in the use of low cost material and treatments helps to encourage that bamboo can be used as a reinforcements. [8] made an attempt to study the behavior of bamboo reinforcing elements under different loading condition in different structures. In this work, bamboo mats are used for differential foundation settlement and it shows good resistance to settlement.[16] conducted his experiments such as axial compression and transverse loading on plain column, steel column and bamboo column.

From test, he find out load carrying capacity, lateral deflection and failure mode pattern. He concluded that bamboo can be used as a substitute for steel in beam and column structural members.

In this present research, we conduct experiments using bamboo as a reinforcement in main rebars. The stirrups are in steel which of size 8 mm with spacing of 150 mm for 0.7 m beam. The beams are casted and cured for days of 28 and 56 days.

The flexural strength, load vs deflection for different loading conditions are evaluated. The test are conducted in loading frame with two point load in one- third of positions.

II. MATERIALS AND METHODS

Cement, Coarse Aggregate and M- Sand

Concrete is the one which composed of constituents such as cement, aggregate and water. These ingredients of concrete are taken and their basic testes are done as per IS codes.

OPC (ordinary Portland cement) of 53 grade cement were used as per IS 4031 (part-2,3,4)[]. The coarse aggregate were chosen as per IS 2386[13,14,15] and size and shape of 20 mm and angular shape were used for this work.

Their properties are checked as per IS codes. In this work, we use m- sand for fine aggregate and its properties are tested.

The properties of cement, coarse aggregate and m-sand are tabulated below,

Manuscript published on 30 December 2019.
*Correspondence Author(s)
Dr.P. Rama Mohan Rao, Associate Professor, Center for Disaster Mitigation & Management, Vellore Institute of Technology, Vellore, Tamilnadu, India.
S. Karthik, Research Scholar, Center for Disaster Mitigation & Management, Vellore Institute of Technology, Vellore, Tamilnadu, India.

Table 1: Basic physical properties of cement, coarse aggregate and m-sand

S.NO	PHYSICAL TEST	CEMENT	F.A	C.A
1	Specific gravity	3.15	2.8	2.5
2	fineness	1g	-	-
3	soundness	1 mm	-	-
4	consistency	30 %	-	-
5	Setting time A) Initial setting B) final setting	30 mins 5 hrs	-	-
6	Water absorption	-	2%	-
7	Crushing strength	-	6.7%	-
8	Impact strength	-	29.6%	-
9	Fineness modulus	-	-	2.43

Bamboo

Bamboo is a plant which belongs to the family of grass and its subfamily of poaceae (Gramineae). It is a fast growing plant which grows in most of the tropical and subtropical climatic regions. Bamboo plants mainly grows from seeds and rhizome and it is dependent on rhizome system. [1] gives information that it can also be used for construction particularly on housing units. It is a renewable and natural material and which it possess high strength and low in weight. It is majorly divided into two portions such as rhizome and culms. The rhizome which goes underground and it grows from it.

[3] carried out his experiments with culm which is concealed with wax on surface to retain its moisture from escaping. The culm has ridges in its intervals called nodes. The strength of bamboo is increased gradually when it is properly seasoned. [4] studied and encouraged that bamboo can be used as a reinforcement material for construction of mud walls and it have high strength and they are sustainable for environment. [5] compared and evaluated the flexural performance and deflection characteristics of concrete reinforced with bamboo and rattan and with twisted steel rebars.

Some Species of bamboo can grow about 91cm (36in) within 24hrs, at rat of 4cm(1.6in). It is a natural and renewable source of energy and hence it is used as a natural fiber replacement for structure. Its physical and mechanical properties are tested as per IS code in IS: 6874-2008 (methods of test for bamboo)[9]. The properties were tested and given below in following table:

Table 2: Properties of Bamboo

SI.NO	PROPERTIES OF BAMBOO	VALUE
1	Tensile strength	312.67N\mm^2
2	Moisture content	4%
3	Shrinkage	1mm

III. METHODOLOGY

In this research, we utilize low- cost material of bamboo as a reinforcement for the replacement of steel in structural member of beam. In this, we use cement grade of 53 is used throughout this work and mix design of M25 grade is adopted to conduct this research. The mix design is designed according to IS:10262-2009 [12]. The bamboo length of 0.65 mm and diameter of 10 mm is provided. The size of the beam is 150 X 150 X 700 mm and its main reinforcement area is calculated as per procedure followed for simply supported beam. The bamboois taken as main rebars and it is provided with some percentages such as 25%, 50 %, 75% and 100%. The specimens are casted and cured for 28 days and 56 days. The samples are tested in loading frame and results obtained are used to calculate the flexural strength, deflection data and to find the cracking pattern in beam.

Placement of Bamboo

Concrete is strong in compression and weak in tension. In which steel rebars are provided in concrete to strengthen it from tension failure. In this research, we take that bamboo as a reinforcement in concrete structural member instead of beam. The bamboo is placed in both the tension and compression zone of member with reference to the percentage of bamboo used as a reinforcement. In 25 % and 50% bamboo beam, bamboo rebar is placed in tension zone and in which the stirrups are provided in steel. The steel grade of Fe 415 is used for stirrups. From the calculation result, 6mm diameter bar is provided with spacing of 150 mm is taken for casting of beam.

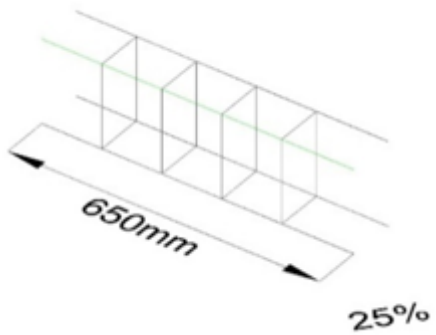

Fig. 1: 25% bamboo reinforcement

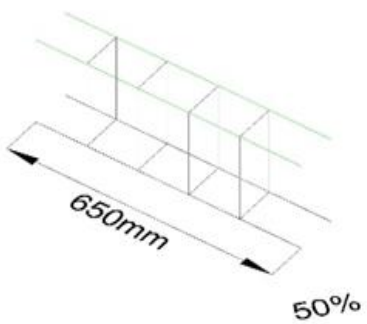

Fig. 2: 50% Bamboo Reinforcement

Published By:
Blue Eyes Intelligence Engineering
and Sciences Publication (BEIESP)

In above diagrams, it shows the positions of bamboo in 0.7 m beam. In this it states that the green line which indicates the positions of bamboo in beam. In 25 % and 50 % bamboo beam, the reinforcement is placed in tension zone. In other case, 75 % and 100 % beam, reinforcement is provided in both the tension and compression zone. It is drawn by using the Auto-cadd software tool.

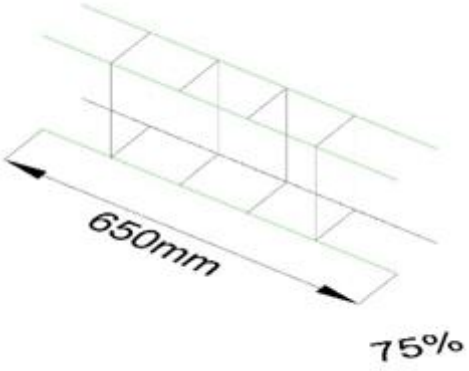

Fig. 3: 75 % Bamboo Reinforcement

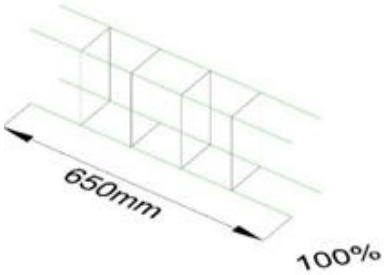

Fig 4: 100% Bamboo Reinforcement

IV. RESULT AND DISCUSSION

For this research, experiments are carried out in our concrete technology laboratory which is in our campus. The flexural strength, load vs deflection for beams and their cracking pattern is observed from the results obtained. The experimental setup for two-point load is given below,

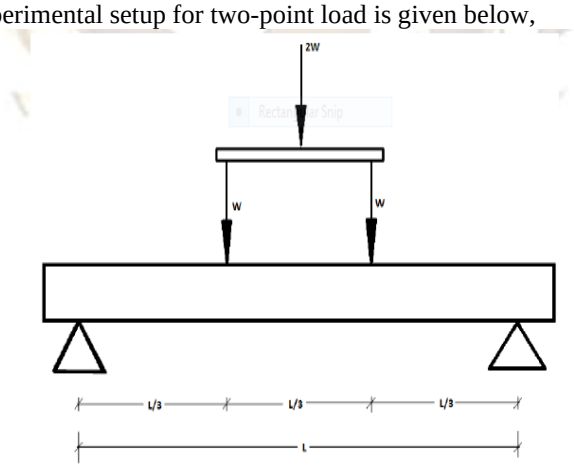

Fig 5: Simply Supported Two Point Load Experimental Setup

Flexural Strength of Beam

The beams are tested in their respective test dates under loading frame to study the behaviour of flexural strength and deflection of bamboo beams. The flexural strength of 0.7 m bamboo beams are calculated by using the ultimate load of beam. The beams are calculated by using the following formula,

Flexural strength f_{cr}= Pl/bd^2 in N/mm^2

Where, P – Ultimate load applied to the specimen in N

l – Length of specimen between supports in mm

b – Breadth of the specimen in mm.

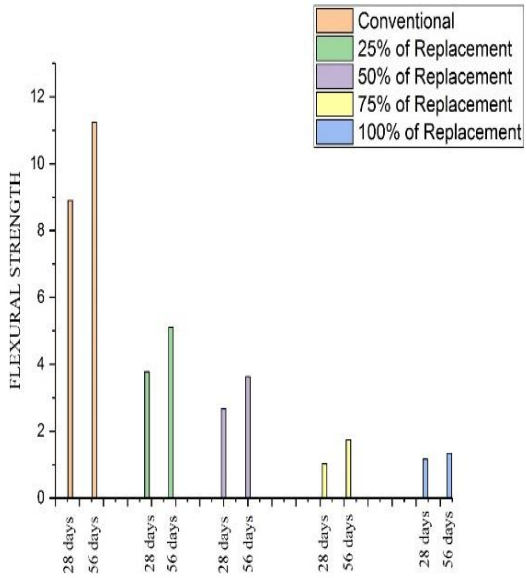

Fig. 6: Flexural Strength of bamboo beams compared with conventional beam

The deflection of each specimens are noted down with the constant increament of load. The load is applied at two points on beam and its deflection with load is taken from digital dial gauge. The initial crack is noted and their ultimate flexure failure is also noted. The Fig 1 shows the strength of bamboo reinforced beam specimens for various percentages of 25 %, 50%, 75% and 100% for curing days of 28 and 56 days. It indicates that the percentage of bamboo increases and its strength is also decreased constantly. The 50 % of bamboo replacement with steel shows higher flexural strength than any other percentages of bamboo replacement.

Load vs Deflection of RCC Beam

For this experiment, two point is given for each beam specimen and load is applied at three different positions on left 1/3, center and right 1/3 under constant loading in loading frame. The deflection test data is taken with respect to load given to beam. Load vs deflection plot has been drawn for all test specimens from experimental results. The behaviour of bamboo beam is recorded and its initial and final crack is also recorded along with displacements of beam.

Published By:
Blue Eyes Intelligence Engineering
and Sciences Publication (BEIESP)

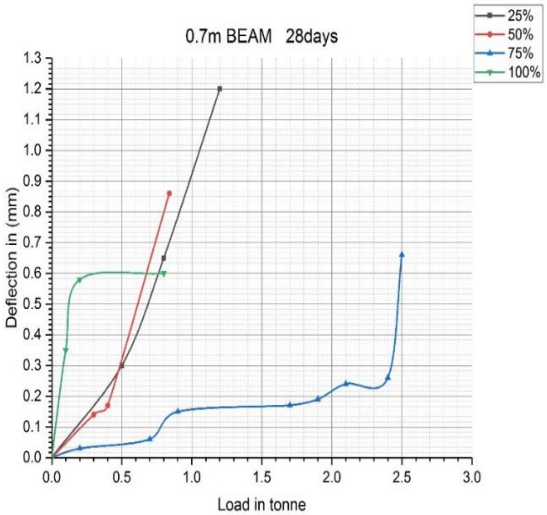

Fig. 7: load vs deflection for bamboo reinforcement (28 days)

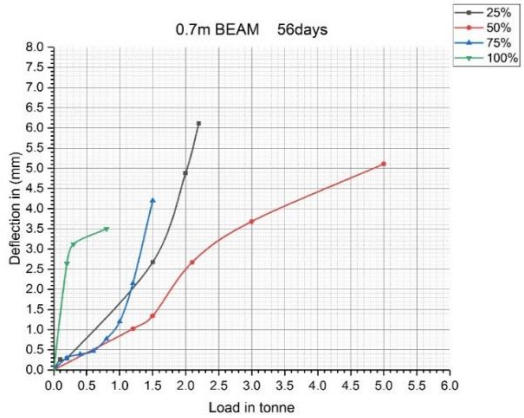

Fig. 8: load vs deflection for bamboo reinforce beam (56 days)

The load versus central deflection for 25 %, 50 %, 75% and 100 % bamboo Replacement curve is represented in Fig 7 and Fig 8. The beam is tested with two point loading and central deflection is measured. The beam with bamboo reinforcement with 25 % shows increased strength for these beams. The mid span deflection is higher in beams other than 25 % beams. The crack first occurs at bottoms the slowly moves towards top when the load is increased. The results also reveals that, for beams with increased bamboo percentages reduced in strength.

Non- Destructive Test

NDT is the wide group of analysis techniques used in science and technology industry to evaluate the properties of material, component or system without causing damage. It is the process of inspecting, testing or evaluating materials, components or assemblies for discontinuities or the serviceability of the part or system.

Rebound Hammer Test

Rebound hammer test is done to find the surface hardness of the hardened concrete. The test procedure is done as per IS:13311 (part-2)-1992 [10]. It is done for beam specimens and their following graph is given below,

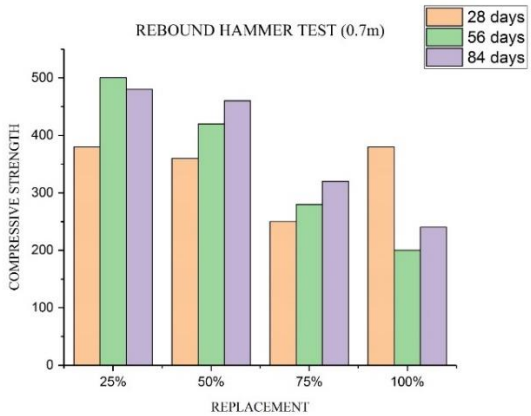

Fig. 9: Comparison of rebound hammer for 0.7 m beam

The above graph which reveals that the 25 % bamboo beam shows the higher compressive strength in comparison with the other percentages of bamboo reinforcement. The 50 % bamboo beam has higher compressive strength than 75 % beam but have lesser strength than 25 %. Therefore, from results we conclude that bamboo can be used as a reinforcement in structural members with proper seasoning to get higher compressive strength which is related to conventional concrete members.

V. CONCLUSION

From our research, we reveal that bamboo can be used for reinforcement in structural member. It efficiently reduces the cost of the work and greatly increased the strength properties equal to the conventional concrete structures. The bamboo which are using must be seasoned properly to attain greater strength. The beams are tested in loading frame to obtain flexural strength and deflection with loads applied on one- third of its position from both ends. From results, we obtain that 25 % bamboo beam attain strength which is slightly less than conventional beam but it is higher than other percentages of beam such as 50 %, 75 % and 100%.

REFERENCES

1. Usha Rani, Martina Jenifer, (2017) “Investigation On The Flexural Behaviour Of Bamboo Reinforced Concrete Beams”, International Journal of Research in Science and Technology, Vol. No. 7, Issue No. I.
2. Masakazu TeraiAnd Koichi Minami, “Research and Development on Bamboo Reinforced Concrete Structure”.
3. Moroz ,Lissel , Hagel, (2014) “Performance of bamboo reinforced concrete masonry shear walls” Construction and Building Materials 61 PP 125–137.
4. Adom-Asamoah Mark, Afrifa Owusu Russell, (2011) “A comparative study of Bamboo reinforced concrete beams using different stirrup materials for rural construction” International Journal Of Civil And Structural Engineering, Volume 2, No 1, Pp 407- 423.
5. Adekunle, Adewuyi Adegboyega, Otukoya Oluwole, Olaniyi Oladipupo, Olafusi, (2015) ‘Comparative Studies of Steel, Bamboo and Rattan as Reinforcing Bars in Concrete: Tensile and Flexural Characteristics’, Open Journal of Civil Engineering, Vol.5, No.02, pp.228-238.
6. Jigar K. Sevalia, Nirav B. Siddhpura, Chetan S. Agrawal, Deep B. Shah, Jai V. Kapadia, (2013) “Study on Bamboo as Reinforcement in Cement Concrete”, International Journal of Engineering Research and Applications (IJERA) Vol. 3, Issue 2, pp.1181-1190

Published By:
Blue Eyes Intelligence Engineering
and Sciences Publication (BEIESP)

7. KuteWakchaure,(2014) "Performance Evaluation for Enhancement of Some of the Engineering Properties of Bamboo as Reinforcement in Concrete", J. Inst. Eng. India Ser. 94(4):235–242
8. Jennifer Gottrona, Kent, A. Harries and Qing FengXu, (2014) 'Creep Behavior of Bamboo', Construction and Building Material, Vol.66, No.05, pp.79-88.
9. IS: 6874-2008 Method of tests for bamboo (CED 9: Timber and Timber Stores).
10. IS: 13311(Part 2) - 1992 Methods of testing for Non-Destructive testing on concrete.
11. IS: 383- 1970 Specifications for coarse and fine aggregate from natural sources of concrete.
12. IS: 10262 – 2009, Concrete Mix Proportioning – Guidelines
13. IS: 2386 (Part 1)-1963 Methods of test for aggregates for concrete: Part 1 Determination of particle size and shape.
14. IS: 2386(Part 3)-1963 Methods of test for aggregates for concrete: Part 3 Determination of specific gravity, density, voids, absorption and bulking.
15. IS: 2386(Part 4)-1963 Methods of test for aggregates for concrete: Part 4 Determination of attrition, abrasion, crushing, and impact value of aggregate.
16. Agarwal, A., Nanda, B., & Maity, D. (2014). Experimental investigation on chemically treated bamboo reinforced concrete beams and columns. *Computers and Chemical Engineering*, *71*, 610–617.

Published By:
Blue Eyes Intelligence Engineering
and Sciences Publication (BEIESP)